FRONX

OWNER'S MANUAL

Keep With Vehicle At All Times.
Contains Important Information
On Safety, Operation & Maintenance.

SUZUKI

This owner's manual applies to the FRONX series.

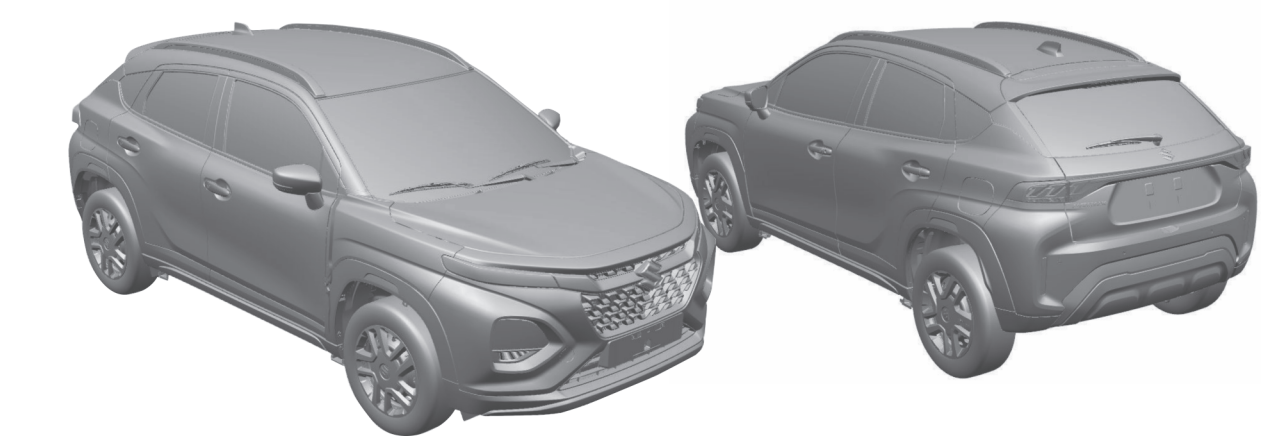

NOTE: The illustrated model is one of the FRONX series.

Copyright © **Suzuki Motor Corporation** 2025 All Rights Reserved
No part of this document may be reproduced or transmitted in any form or by any means, electronic or mechanical, for any purpose, without the express written permission of Suzuki Motor Corporation.

FOREWORD

This manual should be considered as a permanent part of the vehicle and should remain with the vehicle when resold or otherwise transferred to a new owner or operator. Please read this manual carefully before operating your new SUZUKI vehicle and review the manual from time to time. It contains important information on safety, operation and maintenance.

Suzuki Motor Corporation

All information in this manual is based on the latest product information available at the time of publication. Due to improvements or other changes, there may be discrepancies between information in this manual and your vehicle. Suzuki Motor Corporation reserves the right to make production changes at any time, without notice and without incurring any obligation to make the same or similar changes to vehicles previously built or sold.

This vehicle may not comply with standards or regulations of other countries. Before attempting to register this vehicle in any other country, check all applicable regulations and make any necessary modifications.

IMPORTANT

⚠WARNING/⚠CAUTION/*NOTICE*/ *NOTE*

Please read this manual and follow its instructions carefully. To emphasize special information, the symbol ⚠ and the words **WARNING**, **CAUTION**, ***NOTICE*** and *NOTE* have special meanings. Pay particular attention to messages highlighted by these signal words:

⚠ WARNING
Indicates a potential hazard that could result in death or serious injury.

⚠ CAUTION
Indicates a potential hazard that could result in minor or moderate injury.

NOTICE
Indicates a potential hazard that could result in vehicle damage.

NOTE:
Indicates special information to make maintenance easier or instructions clearer.

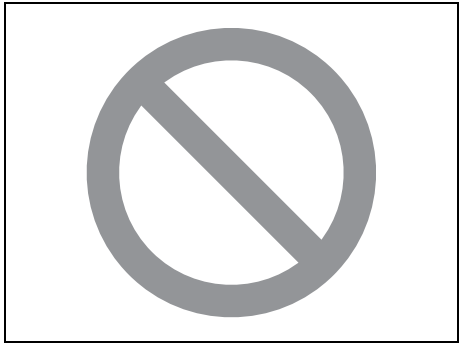

75F135

The circle with a slash in this manual means “Do not do this” or “Do not let this happen”.

MODIFICATION WARNING

⚠ WARNING

Do not modify this vehicle. Modification could adversely affect safety, handling, performance, or durability and may violate governmental regulations. In addition, damage or performance problems resulting from modification may not be covered under warranty.

NOTICE

Improper installation of mobile communication equipment such as cellular telephones, CB (Citizen’s Band) radios or any other wireless transmitters may cause electronic interference with your vehicle’s ignition system or any other electrical systems, resulting in vehicle performance problems. Consult an authorized SUZUKI dealer or qualified service technician for advice.

NOTICE

The diagnostic connector of your vehicle is prepared only for the specific diagnostic tool for inspection and service purpose. Connecting any other tool or device may interfere with electronic parts operations and cause running out of batteries.

INTRODUCTION

Thank you for choosing SUZUKI and welcome to our growing family. Your choice was a wise one; SUZUKI products are a great value that will give you years of driving pleasure.

This Owner's Manual was prepared to help you have a safe, enjoyable, and trouble-free experience with your SUZUKI. In it you will learn about the vehicle's operation, its safety features and maintenance requirements. Please read it carefully before operating your vehicle. Afterwards, keep this Manual in the glove box for future reference.

Should you resell the vehicle, please leave this Manual with it for the next owner.

In addition to the Owner's Manual, the other booklets provided with your SUZUKI explain the vehicle's warranties. We recommend you read them as well to familiarize yourself with this important information.

When planning the regular scheduled maintenance of your SUZUKI, we recommend you visit your local SUZUKI dealership. Their factory-trained technicians will provide the best possible service and use only genuine SUZUKI parts and accessories.

NOTE:
- *"SUZUKI dealer" means an Authorized Suzuki Dealer and an Authorized Suzuki Service Workshop.*
- *The illustrations in this manual represent a typical variation, which may differ from your vehicle.*

Suzuki Motor Corporation

Vehicle Data Recordings

There are certain components of your vehicle (the “Vehicle”) incorporating data storage modules or memories, which temporarily or permanently store the technical data below listed. These data are exclusively technical and serve for (i) identifying and correcting faults occurred in the Vehicle and/or (ii) optimizing functions of the Vehicle.

Recorded data

- Status of vehicle such as engine speed, etc.
- Vehicle conditions such as vehicle speed, travel distance, average fuel consumption, average speed, driving time, fuel consumption, total idling fuel saved, total idling stop time (if equipped), etc.
- Conditions of the transmission such as gear position
- Operating conditions such as accelerator, brake, steering angle and shift position, etc.
- Information on malfunction of various computer systems
- Information on SRS airbag system operation (the data will be recorded in the EDR (Event Data Recorder)
- Operating conditions of the driving assist systems
- Images from the front camera (DSBS II) (if equipped)

NOTE:
- *The data cannot be used to detect the Vehicle’s movements.*
- *The data stored in data storage modules or memories differ according to the Vehicle’s grade, model and destinations.*
- *No conversation, noise/sound, nor images in the Vehicle will be recorded in any event.*
- *The data may not be recorded in some situations.*
- *The image recording function by the front camera (DSBS II) (if equipped) can be disabled depending on the countries and regions. Consult an authorized SUZUKI dealer or a qualified workshop for details. (If it is set not to record image data, no data will remain when the system is operating.)*

If these technical data are combined with other information (e.g. accident or witness report, damage on the Vehicle, etc.), there may be cases that such data may identify a specific person.

Erasing data

The data listed in the *"*Recorded Data*"* can be erased by an authorized SUZUKI dealer or a qualified workshop, excluding items necessary for vehicle maintenance and compliance with regulations.
SUZUKI will not be responsible for any data leakage of the data listed in the *"*Recorded Data*"* caused by not erasing the data when the Vehicle is handed over or scrapped. Please request an authorized SUZUKI dealer or a qualified workshop to erase the data at your discretion.

Event Data Recorder (EDR) of SRS airbag

EDR stands for Event Data Recorder.
The data will be recorded in the event of an accident such as SRS airbag being activated. Refer to the *"*What is SRS Airbag System?*"* (P.2-47).

RECOMMENDATION OF GENUINE SUZUKI PARTS AND ACCESSORIES USE

SUZUKI strongly recommends the use of genuine SUZUKI parts and accessories. Genuine SUZUKI parts and accessories are built to the highest standards of quality and performance, and are designed to fit your vehicle's exact specifications.

A wide variety of non-genuine replacement parts and accessories for SUZUKI vehicles are currently available in the market. Using these parts and accessories can affect the vehicle performance and shorten its useful life. Therefore, installation of non-genuine SUZUKI parts and accessories is not covered under warranty.

Non-Genuine SUZUKI Parts and Accessories

Some parts and accessories may be approved by certain authorities in your country.
Some parts and accessories are sold as SUZUKI-authorized replacement parts and accessories. Some genuine SUZUKI parts and accessories are sold as re-use parts and accessories. These parts and accessories are non-genuine SUZUKI parts and accessories and use of these parts is not covered under warranty.

Re-use of Genuine SUZUKI Parts and Accessories

The resale or re-use of the following items which could give rise to safety hazards for users is expressly forbidden:

- Airbag components and all other pyrotechnic items, including their components (e.g. cushion, control devices and sensors)
- Seat belt system, including their components (e.g. webbing, buckles, and retractors)

The airbag and seat belt pretensioner components contain explosive chemicals. These components should be removed and disposed of properly by SUZUKI-authorized service shop or scrap yard to avoid unintended explosion before scrapping.

SERVICE STATION GUIDE

1. Fuel (see section 7)
2. Engine hood (see section 7)
3. Tyre changing tools (see section 10)
4. Engine oil dipstick (see section 9)
5. Automatic transmission fluid dipstick (see section 9)
6. Engine coolant (see section 9)
7. Windshield washer fluid (see section 9)
8. Lead-acid battery (see section 9)
9. Tyre pressure (see Tyre Information Label on driver's door lock pillar)
10. Spare tyre (see section 10)

LHD: Left Hand Drive
RHD: Right Hand Drive

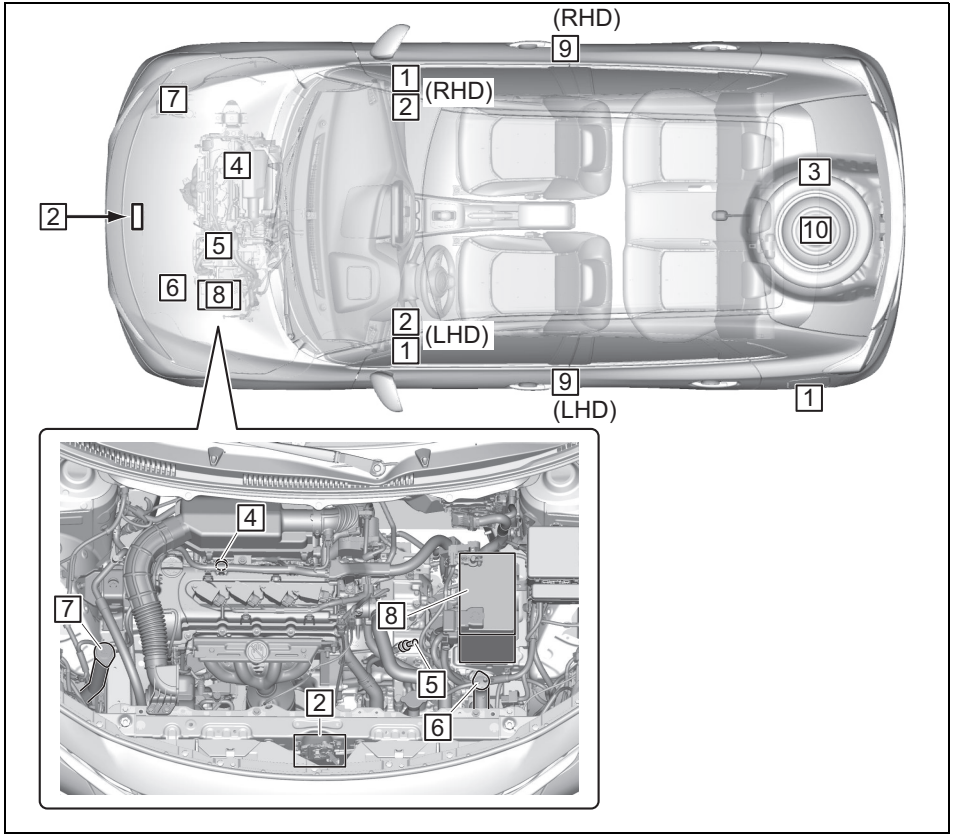

74U010026

MEMO

TABLE OF CONTENTS

QUICK GUIDE	1
FOR SAFE DRIVING	2
BEFORE DRIVING	3
INSTRUMENT CLUSTER	4
OPERATING YOUR VEHICLE	5
ADVICE FOR YOUR DRIVING	6
OTHER CONTROLS AND EQUIPMENT	7
VEHICLE LOADING AND TOWING	8
INSPECTION AND MAINTENANCE	9
EMERGENCY SERVICE	10
APPEARANCE CARE	11
SPECIFICATIONS	12
SUPPLEMENT	13
INDEX	14

MEMO

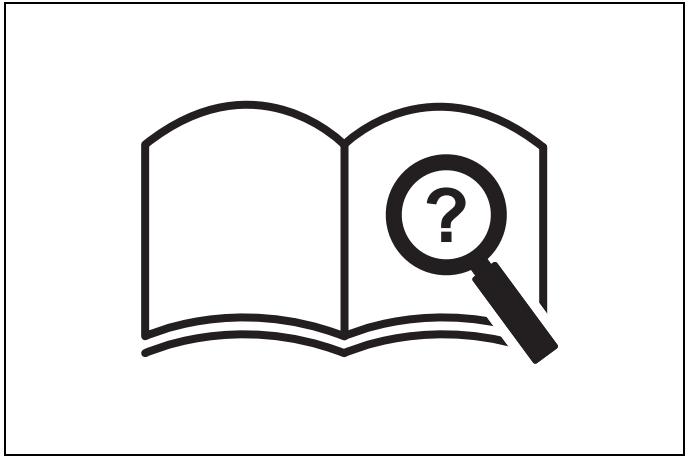

59RN00020

QUICK GUIDE

Illustrated Table of Contents 1-1
Warning Lights and Indicators 1-9
Warning Buzzer 1-21

Illustrated Table of Contents

Exterior

(1) Door (P.3-1)
(2) Door locks (P.3-2)
(3) Outside rearview mirror (P.2-9)
(4) Windshield wiper (P.3-30, 9-34)
(5) Fuel filler cap (P.7-1)
(6) Radio antenna (P.7-32)
(7) High mount stop light (P.9-32)
(8) Tailgate (P.3-4)
(9) Rear window wiper (P.3-32, 9-36)
(10) Rearview camera (P.5-180)
(11) Side turn signal light (P.9-32)
(12) Side camera (if equipped) (P.5-120, 5-148)
(13) Front camera (DSBS II) (if equipped) (P.5-48)
(14) Daytime running light (D.R.L.) (P.3-24, 9-33), Position light (P.9-32), Front turn signal light (P.3-29, 9-32)
(15) Front radar (DSBS II) (if equipped) (P.5-48)
(16) Headlight (P.3-22, 9-32)
(17) Engine hood (P.7-4)
(18) Front camera (360 View Camera) (if equipped) (P.5-120, 5-148)
(19) Towing eye cover (P.10-2)
(20) Brake light and tail light (P.9-32)
(21) Reversing light (P.9-32)
(22) Rear turn signal light (P.3-29, 9-32)
(23) Tail light (P.9-32)
(24) Tail light (if equipped) (P.9-32)
(25) Parking sensor (P.5-105, 5-174)
(26) License plate light (P.3-22, 9-32)

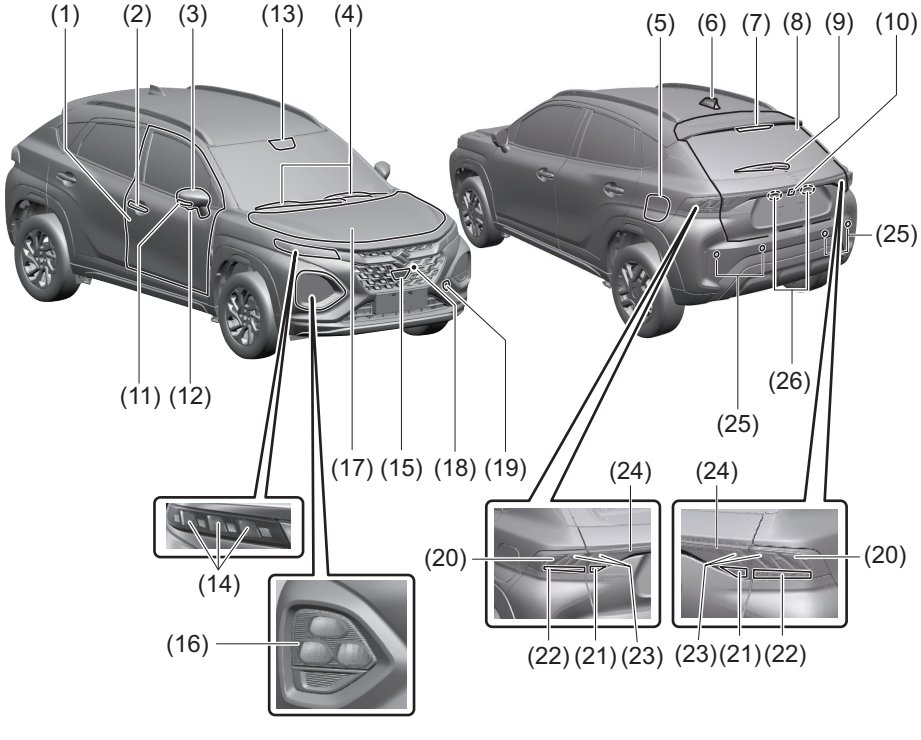

74U010015

Interior, Side (Right Hand Drive Vehicle)

(1) Inside rearview mirror (P.2-8)
(2) Front camera (DSBS II) (if equipped) (P.5-48)
(3) Front interior light (P.7-7, 9-32)
(4) Sun visor (P.7-6)
(5) Warning label for front passenger's front airbag (P.2-50) *1, *2
(6) Hands-free microphone (P.7-34)
(7) Center interior light (P.7-7, 9-32)
(8) Seat belt (P.2-20)
(9) Side curtain airbag (P.2-48)
(10) Front seat (P.2-5)
(11) Side airbag (P.2-48)
(12) Front seat back pocket (P.7-15)

*1: Be sure to read the detailed information in the target page before using a child restraint system.
*2: NEVER use a rearward facing child restraint on a seat protected by an ACTIVE AIRBAG in front of it, DEATH or SERIOUS INJURY to the CHILD can occur.



74TB01001

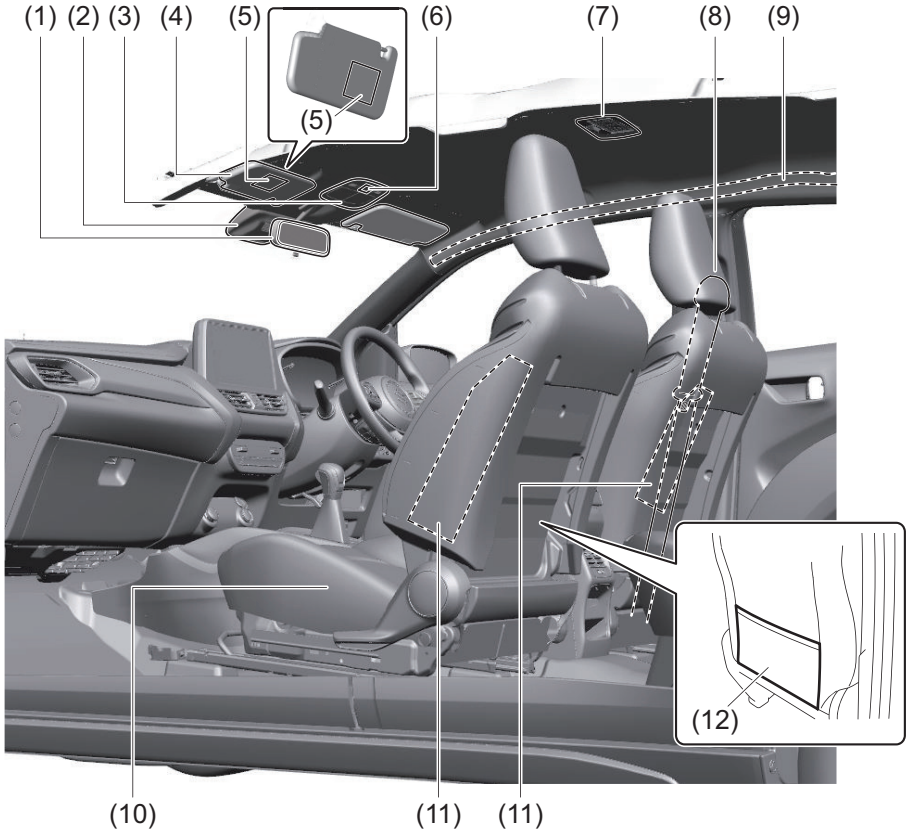

74U010014

Interior, Rear

(1) Assist grip (P.7-13)
(2) Seat belt (P.2-20)
(3) Rear seat (P.2-13)
(4) USB charging socket (P.7-14)

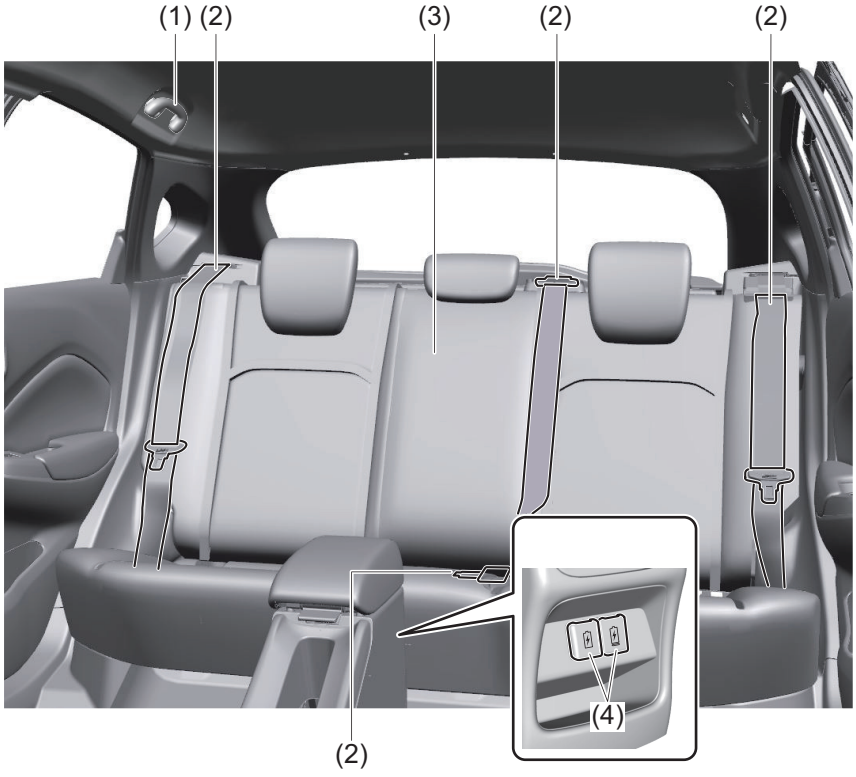

74U010002

Interior, Front (Right Hand Drive Vehicle)

(1) Glove box (P.7-12)
(2) Front passenger's front airbag (P.2-47)
(3) Accessory socket (P.7-9)
(4) Heating and air conditioning system (P.7-16)
(5) USB socket (P.7-14)
(6) Driver's front airbag (P.2-47)
(7) Engine hood release handle (P.7-4)
(8) Fuel lid opener lever (P.7-1)
(9) Parking brake lever (P.5-18)
(10) Gearshift lever (P.5-22)
(11) Door lock switch (P.3-3)
(12) Electric window control (P.3-18)
(13) Electric mirror control (P.2-9)
(14) Window lock switch (P.3-18)
(15) Fuse (P.9-28)

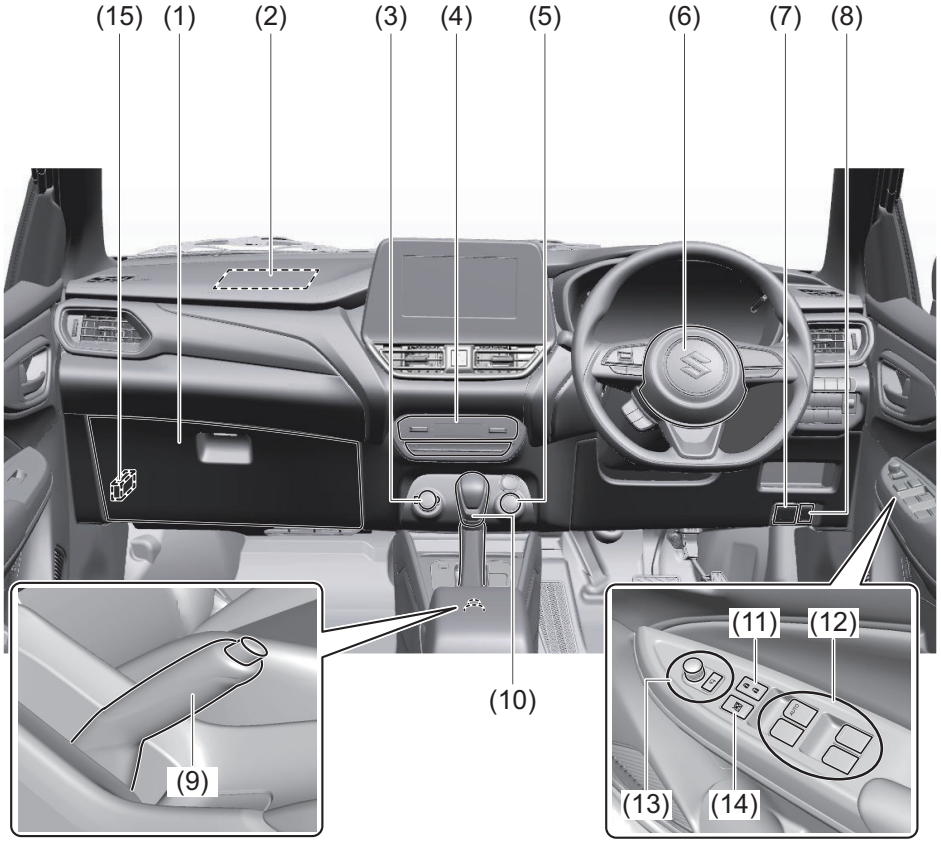

74U010012

Instrument Panel 1 (Right Hand Drive Vehicle)

(1) Hazard warning switch (P.3-30)
(2) Hands-free switch (P.7-34)
Voice recognition switch (P.7-34)
(3) Windshield wiper and washer lever (P.3-30)/
Rear window wiper/Washer switch (P.3-32)
(4) Remote audio controls (P.7-33)
(5) Instrument cluster (P.4-1, 4-15)
(6) Head-up display (if equipped) (P.5-110, 5-141)
(7) Cruise control switches (if equipped) (P.5-44)/Adaptive cruise control switches (if equipped) (P.5-80)
(8) Lighting control lever (P.3-22)/
Turn signal control lever (P.3-29)
(9) Heated rear window switch (P.3-34)
(10) Drink holder (P.7-10)
(11) Tilt / Telescoping (if equipped)
Steering lock lever (P.2-8)
(12) Ignition switch (vehicle without keyless push start system) (if equipped) (P.5-5)
(13) Engine switch (vehicle with keyless push start system) (if equipped) (P.5-6)
(14) Driver's side pocket (P.7-11)

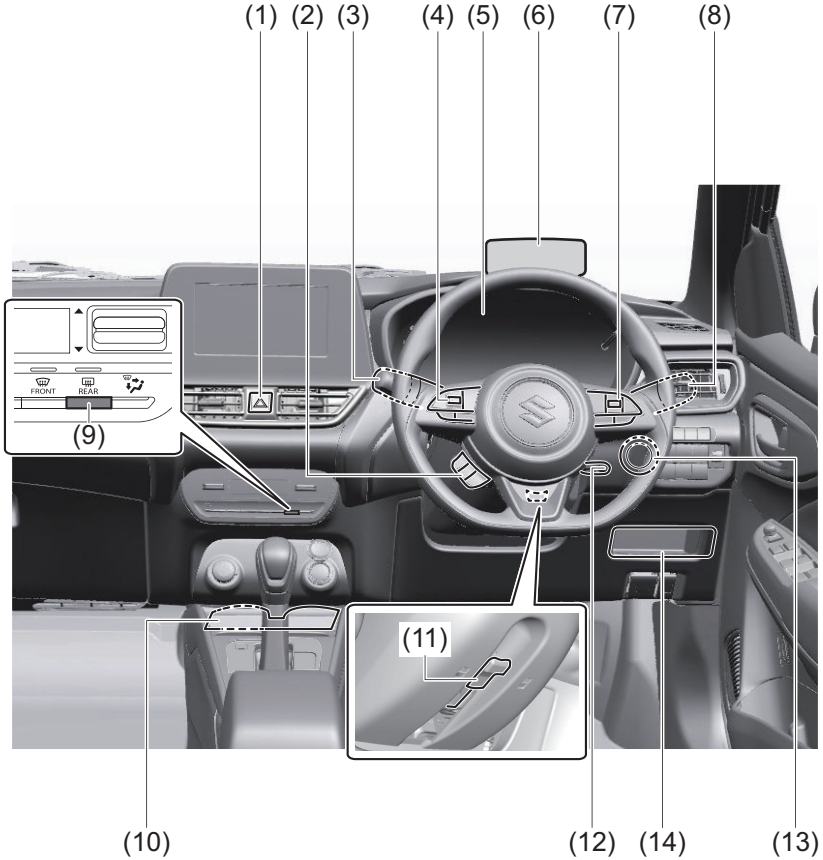

74U010003

Instrument Panel 2 (Right Hand Drive Vehicle)

(1) Down switch* (if equipped) (P.5-110, 5-141)
(2) Up switch* (if equipped) (P.5-110, 5-141)
(3) Brightness control switch* (if equipped) (P.5-110, 5-141)
(4) Head-up display switch* (if equipped) (P.5-110, 5-141)
(5) Dual sensor brake support II (DSBS II) OFF switch (if equipped) (P.5-65)
(6) Lane departure prevention OFF switch (if equipped) (P.5-69)
(7) ESP® OFF switch (P.5-185)
(8) Camera switch (if equipped) (P.5-120, 5-148)
(9) Headlight leveling switch (P.3-20)
(10) Parking sensor OFF switch (P.5-177) /Parking sensor buzzer OFF switch (P.5-110)
(11) ENG A-STOP OFF switch (if equipped) (P.5-41)
(12) Lane keep assist switch (if equipped) (P.5-75)
(13) For non keyless entry (P.3-6, 5-5)
(14) For keyless entry (P.3-9, 5-6)

*: For Head-up display

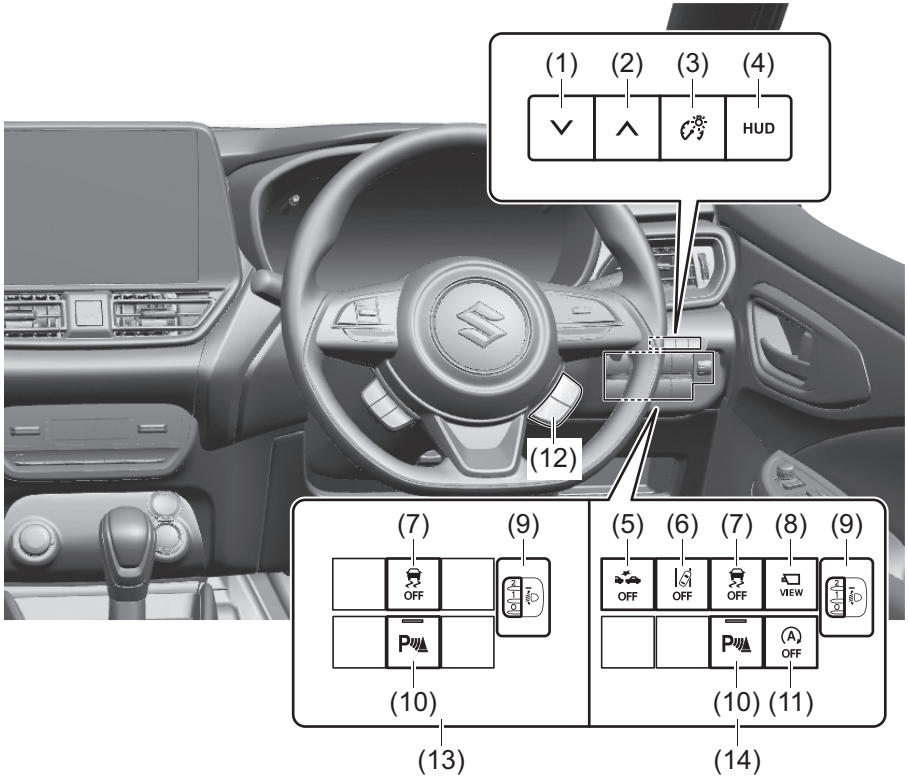

74U010004

Luggage Compartment

(1) Luggage compartment cover (P.7-16)
(2) Spare tyre (P.10-6)
(3) Luggage compartment light (P.7-8, 9-33)
(4) Luggage compartment hook (P.7-15)
(5) Luggage compartment board
(6) Towing eye (P.10-2)
(7) Jack handle (P.10-6)
(8) Jack (P.10-8)
(9) Wheel wrench (P.10-6)
(10) Tool bag (P.10-6)

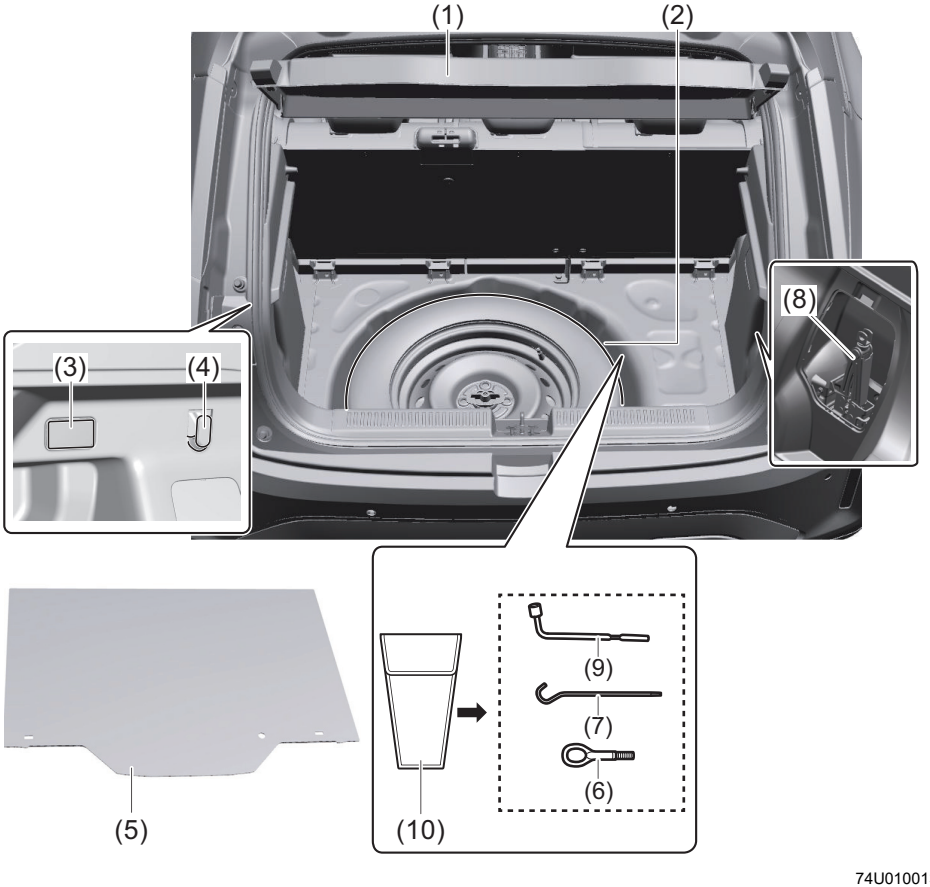

74U010013

Key

(1) Keyless push start system remote controller (P.3-9)
Keyless push start system (P.5-10)
Starting engine (P.5-16)

(2) Key (P.3-1)
Door locks (P.3-1)

(3) Keyless entry system transmitter (P.3-6)
Starting engine (P.5-15)
Key (P.3-1)
Door locks (P.3-1)

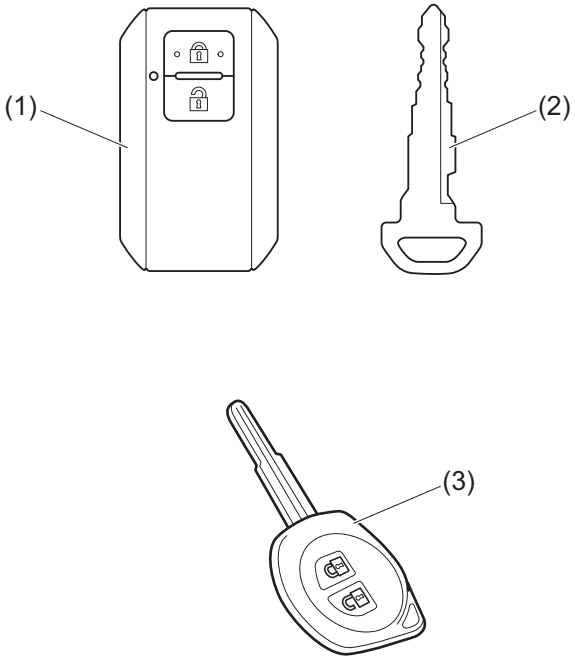

55T010010

Warning Lights and Indicators

Warning Lights

Instrument cluster (Type A)

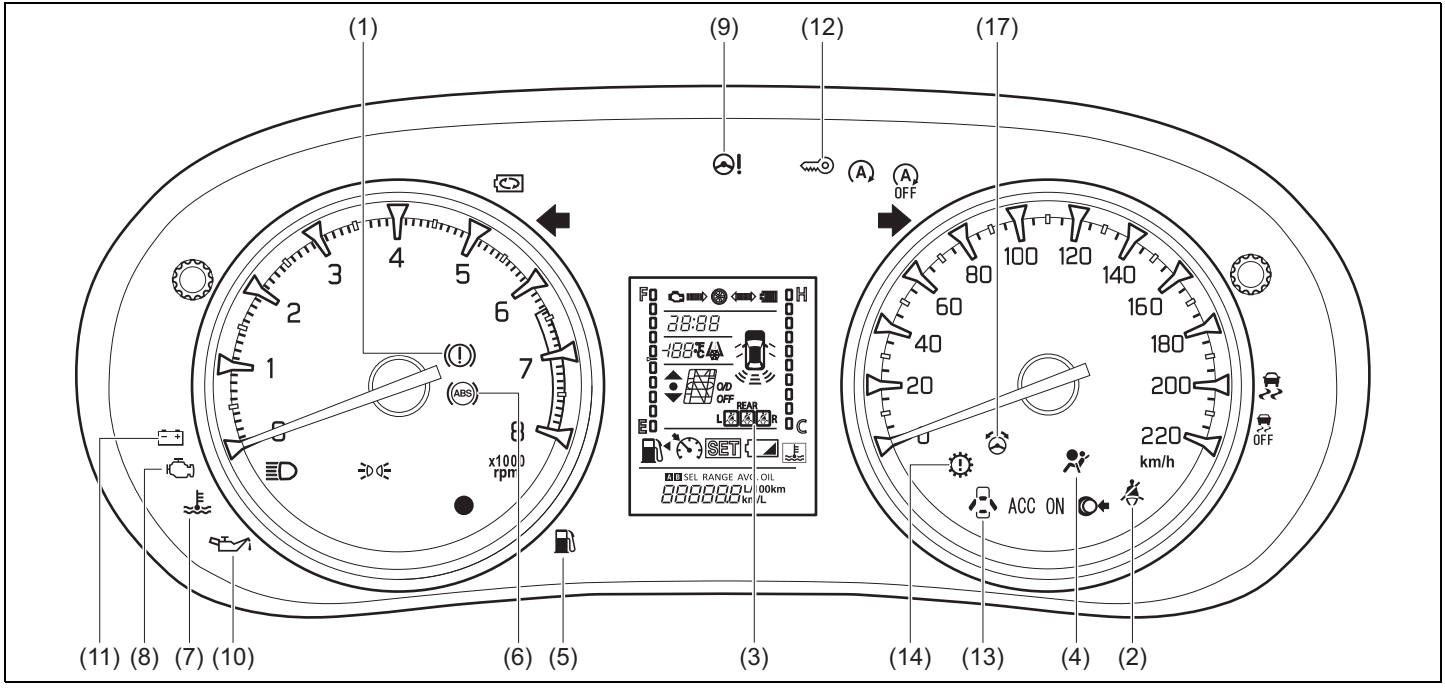

74U010020

Instrument cluster (Type B without DSBS II)

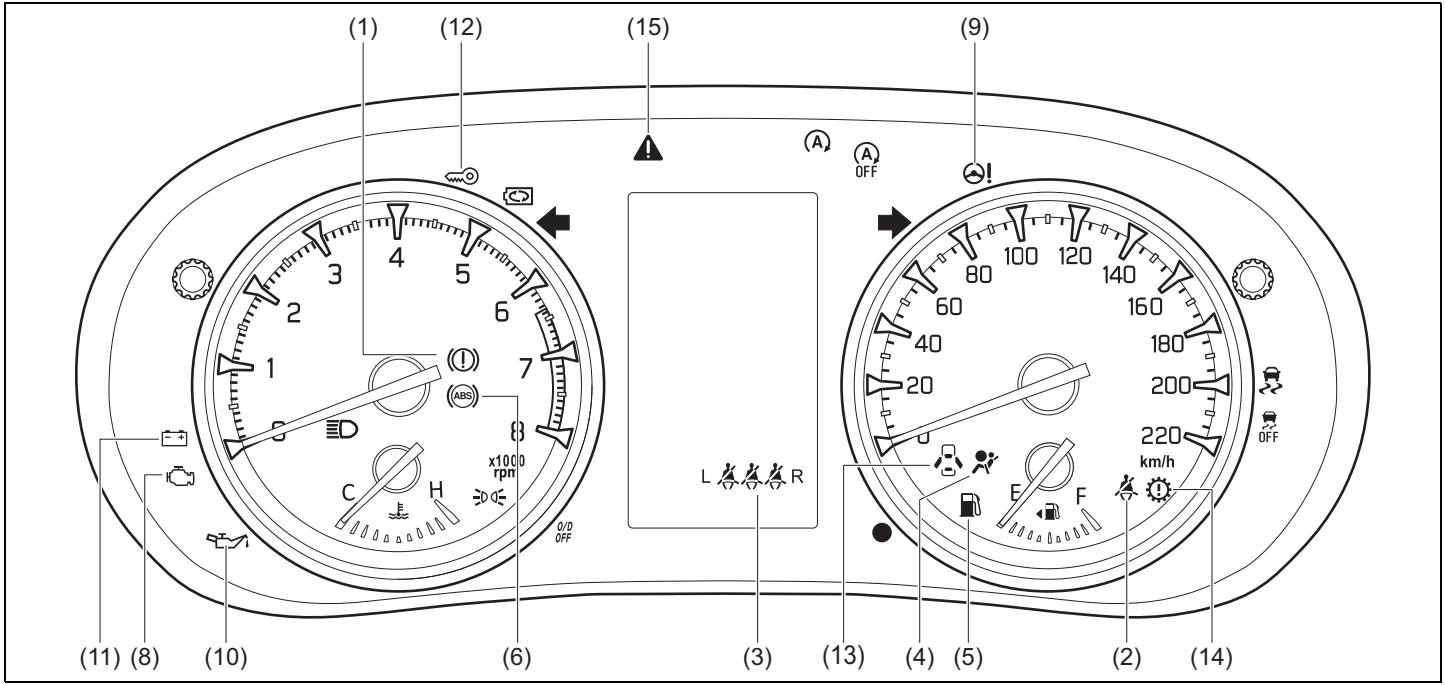

74U010021

Instrument cluster (Type B with DSBS II)

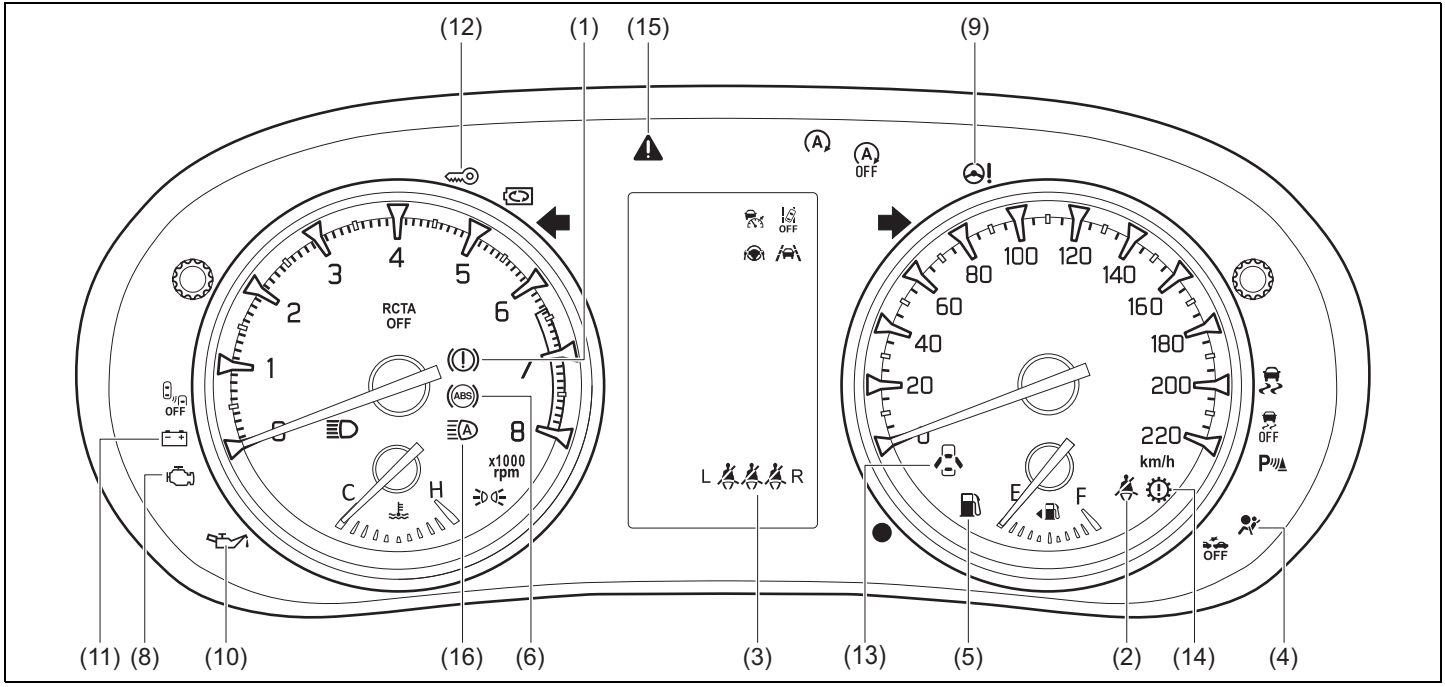

74U010022

- If a warning light continues to be lit or is blinking, there may be a problem with the vehicle or the system. Carefully read the following reference information and consult with an authorized SUZUKI dealer or a qualified workshop.
- It is considered normal that warning lights and indicators marked with an asterisk (*) are lit when turn the ignition switch to ON position or pressing the engine switch to change the ignition mode to ON (i.e., high engine coolant temperature warning light initially lights up in red). If such lights do not light up, consult with an authorized SUZUKI dealer or a qualified workshop.
- For the ENG A-STOP system, there is the particular condition that a warning light or an indicator is lit.

Warning light			Color	Name
(1)		*	Red	Brake System Warning Light
(2)			Red	Driver’s Seat Belt Reminder Light / Front Passenger’s Seat Belt Reminder Light
(3)			White	Rear Passenger’s Seat Belt Reminder Light
			Red	
(4)		*	Red	Airbag Warning Light
(5)			Yellow	Low Fuel Warning Light
(6)		*	Yellow	Anti-lock Brake System (ABS) Warning Light

Warning light			Color	Name
(7)		*	Red	High Engine Coolant Temperature Warning Light (if equipped)
(8)		*	Yellow	Malfunction Indicator Light
(9)		*	Yellow	Electric Power Steering Light
(10)		*	Red	Engine Oil Pressure Warning Light
(11)		*	Red	Charge Warning Light
(12)		*	Yellow	Immobilizer/Keyless Push Start System (if equipped) Warning Light
(13)			Red	Open Door Warning Light
(14)		*	Yellow	Transmission Warning Light (for AT models)

Warning light			Color	Name
(15)		*	Yellow	Master Warning Indicator Light (if equipped)
(16)		*	Yellow	High beam assist warning light (if equipped)
(17)			Yellow	Steering lock warning light (if equipped)

Indicators

Instrument cluster (Type A)

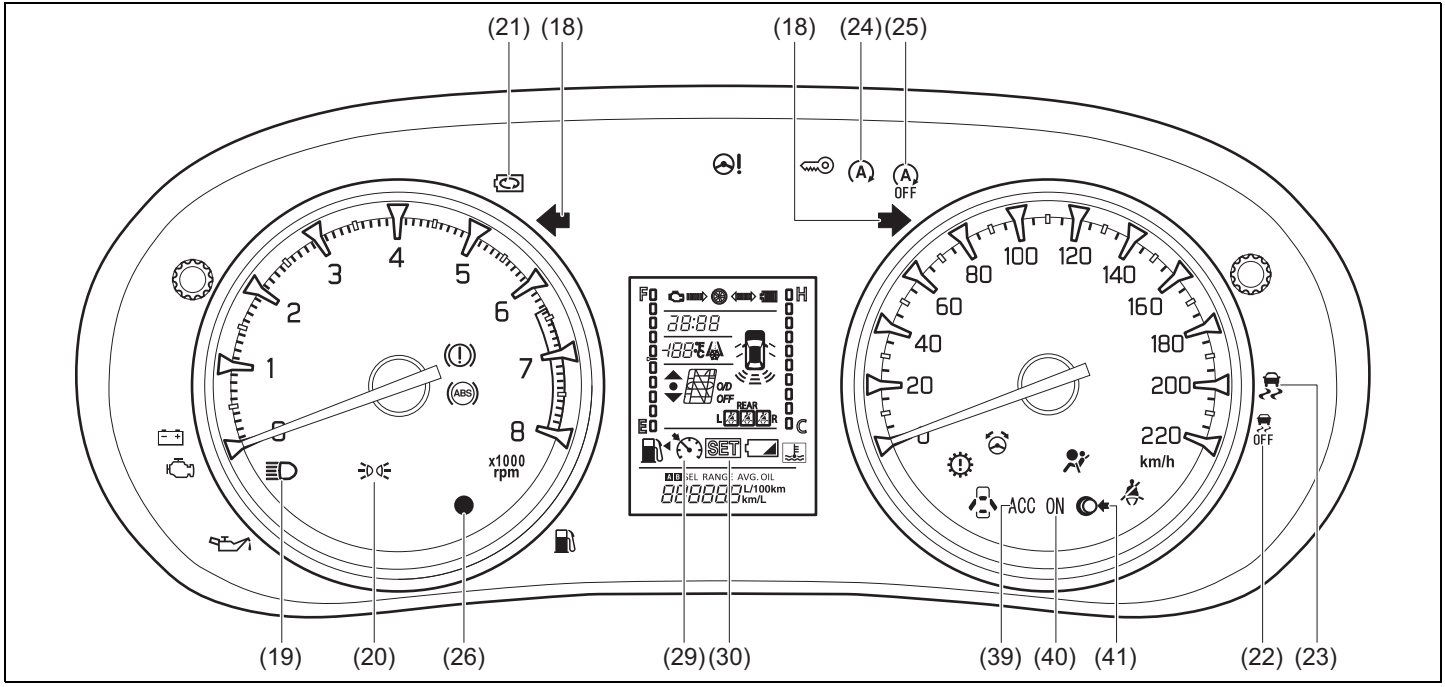

74U010023

Instrument cluster (Type B without DSBS II)

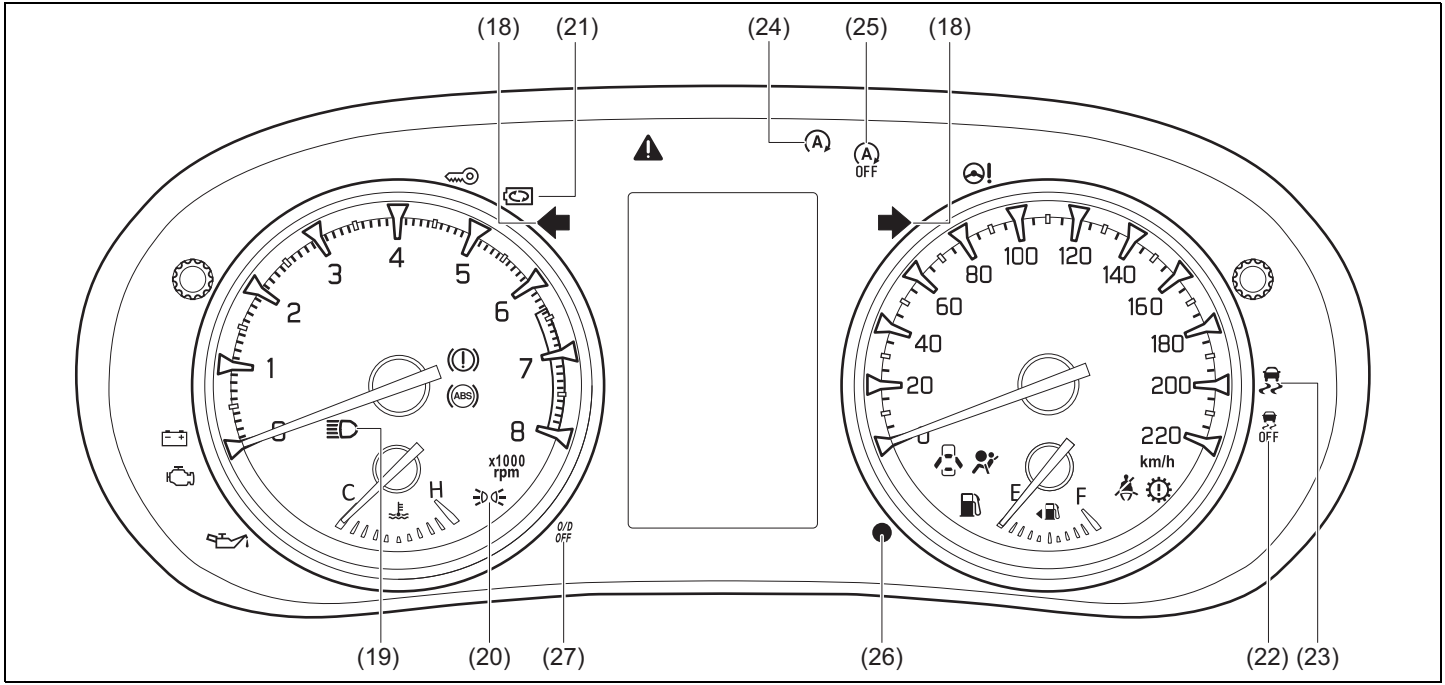

74U010024

Instrument cluster (Type B with DSBS II)

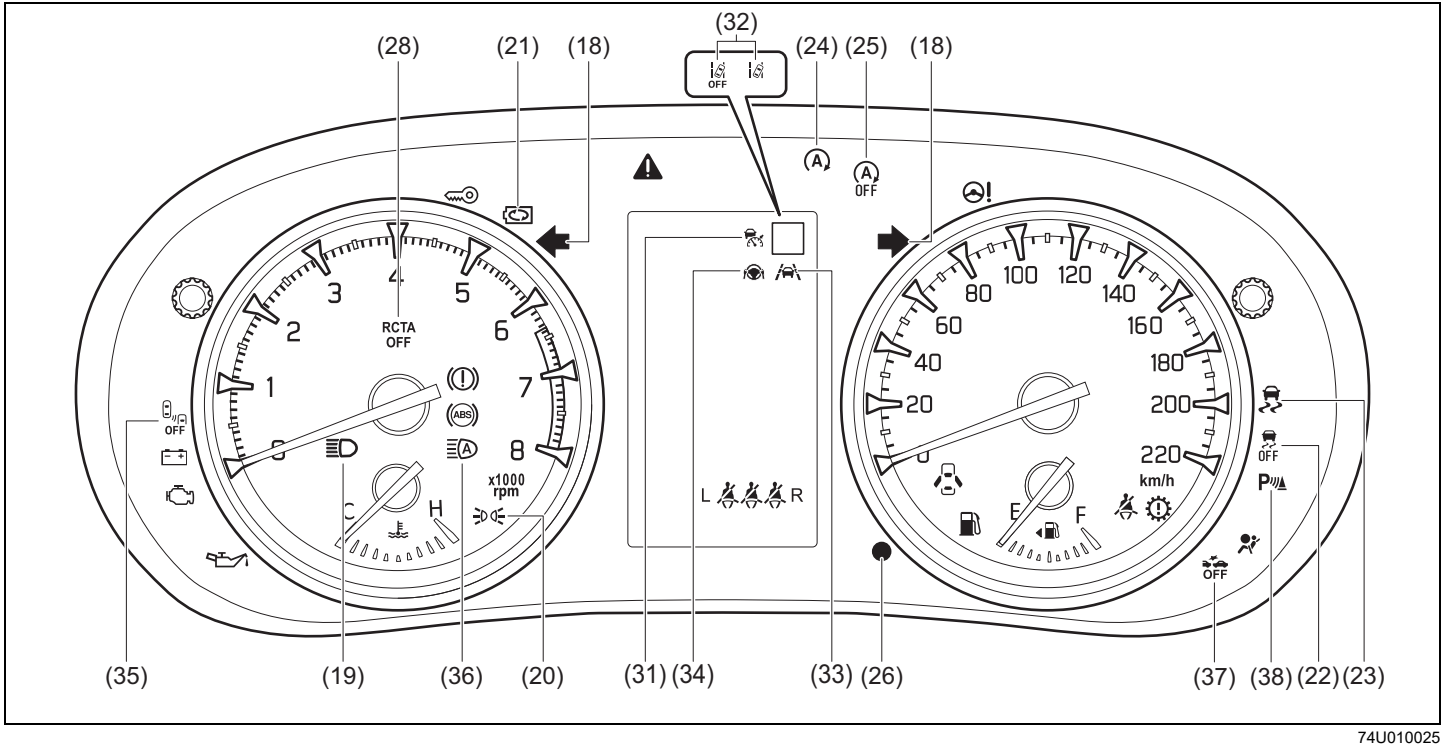

74U010025

Indicator			Color	Name
(18)			Green	Turn Signal Indicators
(19)			Blue	Main Beam (High Beam) Indicator Light
(20)			Green	Illumination Indicator Light
(21)			White	Deceleration Energy Regenerating Indicator Light (if equipped)
(22)		*	Yellow	ESP® OFF Indicator Light
(23)		*	Yellow	ESP® Indicator Light
(24)		*	Green	ENG A-STOP Indicator Light (if equipped)
(25)		*	Yellow	ENG A-STOP OFF Indicator Light (if equipped)

Indicator			Color	Name
(26)			Red	Security System Indicator
(27)	O/D OFF		Yellow	“O/D OFF” Indicator Light (if equipped)
(28)	RCTA OFF	*	Yellow	Rear Cross Traffic Alert (RCTA) OFF indicator light (if equipped)
(29)			Green	Cruise Control Indicator Light (if equipped)
(30)	SET		Green	“SET” Indicator Light (if equipped)
(31)			Yellow Green White	Adaptive cruise control indicator[*1] (if equipped)
(32)		*	Yellow Green White	Lane departure prevention indicator light[*1] (if equipped)
			Yellow	Lane departure prevention OFF indicator light (if equipped)
(33)		*	Yellow Green White	Lane keep assist indicator light[*1] (if equipped)

Indicator			Color	Name
(34)			White Green	Steering assist indicator light (if equipped)
(35)		*	Yellow	Blind Spot Monitor (BSM) OFF indicator light (if equipped)
(36)			Green	High beam assist indicator light (if equipped)
(37)		*	Yellow	Dual Sensor Brake Support II OFF indicator light (if equipped)
(38)		*	Yellow	Parking sensor indicator light (If equipped)
(39)	ACC		Yellow	“ACC” indicator light (if equipped)
(40)	ON		Yellow	Ignition “ON” indicator light (if equipped)
(41)			Green	PUSH indicator light (if equipped)

*1: Depending on the operating status of the system, the color, blinking, and lighting of the indicator light will change.

Warning Buzzer

- *1: The master warning ⚠ in the instrument cluster blinks. At the same time, the message will be shown on the information display to inform the driver of the vehicle condition and the remedy.
- *2: The message will be shown on the information display to inform the driver of the vehicle condition and the remedy.
- *3: Vehicle without SUZUKI SAFETY SUPPORT
- *4: Vehicle with SUZUKI SAFETY SUPPORT

For All model

When	Warning buzzer	Instrument cluster	Cause and remedy
When one of the doors is opened (including engine hood)	Interior buzzer • Beeping at short intervals for approx. 10 seconds*3 • Beeps at short intervals*4	 Blinks every 2 seconds	The security system warning is being activated. You can stop the warning by either of the following operations: • Unlock the doors using the keyless push start system remote controller or the request switch. • Press the engine switch to change the ignition mode to ON.
When the engine switch is pressed to change the ignition mode to ON	Interior buzzer • Beeping 4 times*3 • Beeps at long intervals*4	 Blinks rapidly for approx. 8 seconds	Indicates that a security system has been activated while the vehicle has been parked; check the vehicle to make sure that it is not broken into or nothing is stolen.
	Interior buzzer • Chime	*1	The steering wheel lock has not been released. With load not applied, turn the steering wheel to the left or right so as to press the engine switch again.

When	Warning buzzer	Instrument cluster	Cause and remedy
When stopping or backing up the vehicle	Interior buzzer • Short beeps at long intervals, short beeps at short intervals, short beeps at very short intervals, or continuous beep	–	Rear parking sensors detect an obstacle on the rear side of the vehicle. Check the surrounding area directly with your eyes and the mirrors, and back up the vehicle slowly.
When the engine switch is in ON mode	Interior buzzer • Chime	 Lights up	The brake fluid is insufficient or the brake system may be faulty. Consult with an authorized SUZUKI dealer or a qualified workshop.
	Interior buzzer • Chime	 Lights up	The fuel level is low. Refuel soon.

<table>
<tr><th>When</th><th>Warning buzzer</th><th>Instrument cluster</th><th>Cause and remedy</th></tr>
<tr><td rowspan="4">When driving</td><td>Interior buzzer
• Beeping at short intervals for approx. 95 seconds.*3
• Beeps at short intervals or long intervals*4</td><td>
Blinks
*1</td><td rowspan="3">The driver does not wear his/her seat belt. Stop the vehicle in a safe place and wear your seat belt.
The front or rear passenger(s) does not wear his/her seat belt. Wear the seat belt.</td></tr>
<tr><td rowspan="2">Interior buzzer
• Beeping at short intervals for approx. 35 seconds.*3
• Beeps at short intervals or long intervals*4</td><td>
Blinks
*1</td></tr>
<tr><td>
Blinks
*1</td></tr>
<tr><td>Interior buzzer
• 3 beeps repeating at short intervals*3
• Beeps at short intervals*4</td><td>
Lights up
*1</td><td>The parking brake has not been released. Stop the vehicle in a safe place and release the parking brake.</td></tr>
<tr><td>When driving</td><td>Interior buzzer
• Chime (once)*3
• Beeps at long intervals*4</td><td>
Lights up
*1</td><td>One of the doors is not completely closed. Stop the vehicle in a safe place and close all doors completely.</td></tr>
</table>

When	Warning buzzer	Instrument cluster	Cause and remedy
When opening the driver's door	Interior buzzer • Continuous beep	 Lights up *1	The headlights and/or the position lights are left on. Turn them off.

For Automatic Transmission models

When	Warning buzzer	Instrument cluster	Cause and remedy
When using the shift paddle (only at 6AT)	Interior buzzer • 2 beeps at short intervals[*3] • Beeps at short intervals[*4]	–	The gear position is not set in the desired position by operating the paddle shift switch. Select the proper gear position for the vehicle speed.
When the engine is stopped automatically by the ENG A-STOP system	Interior buzzer • 2 Beeps[*3] • Continuous beeps[*4]	[*2]	The engine stalled because the hood is opened after the engine is stopped automatically. To restart the engine, follow the procedure below. 1) Set the parking brake firmly, and then place the gearshift lever in the “P” position. 2) Securely close the engine hood. 3) Press the engine switch to restart the engine.

For Vehicle Without Keyless Push Start System

When	Warning buzzer	Instrument cluster	Cause and remedy
When opening the driver's door	Interior buzzer • Continuous beep	–	The ignition key is in the ignition switch. Remove the ignition key from the ignition switch.

For Vehicle With Keyless Push Start System

When	Warning buzzer	Instrument cluster	Cause and remedy
When the engine switch is pressed to change the ignition mode to ON	Interior buzzer • Beeping once	 Blinks every 1 second *1	There may be a problem with the keyless push start system. Ask an authorized SUZUKI dealer or a qualified workshop for inspection.
When the engine switch operated	Interior buzzer • Beeping twice *3 • Chime *4	 Lights up *1	The remote controller may be outside the vehicle or its battery may have become discharged. Bring the remote controller in the vehicle or touch the engine switch with the remote controller.
When the engine switch is pressed to change the ignition mode to ON or ACC	Exterior and/or interior buzzers • 5 beeps repeating at short intervals *3 • Beeps at short intervals *4 Interior buzzer • Chime	 Blinks *1	When the engine switch was pressed to change the ignition mode to ON or ACC, the remote controller was detected. However, when starting the engine, the remote controller was not detected. Place the remote controller in the interior workable area and then press the engine switch again.

When	Warning buzzer	Instrument cluster	Cause and remedy
When one of the door is opened or closed	Exterior and/or interior buzzers • 5 beeps repeating at short intervals[*3] • Beeps at short intervals[*4]	 Blinks[*1]	The remote controller may be outside the vehicle. Bring the remote controller in the vehicle.
When opening the driver's door	Interior buzzer • Beeping at short intervals[*3] • Continuous beeps[*4]	–	Press the engine switch to change the ignition mode from ACC to LOCK (OFF).
	Interior buzzer • Continuous short beeps[*3] • Chime[*4]	–	The steering lock fails to engage due to a fault in the system when the ignition mode is turned to LOCK (OFF) by pressing the engine switch. Have the vehicle inspected by an authorized SUZUKI dealer or a qualified workshop.
When pushing the request switch	Exterior buzzer • Beeping at short intervals for approx. 2 seconds[*3] • Continuous beeps[*4]	–	The engine switch is in ACC or ON mode. Press the engine switch to change the ignition mode to LOCK (OFF).
		–	The remote controller is left inside the vehicle. Take the remote controller outside the vehicle.
		 Lights up[*2]	Any door (including the tailgate) is open. Close all doors completely

When	Warning buzzer	Instrument cluster	Cause and remedy
When pushing LOCK button on the remote controller	Exterior buzzer • Beeping at short intervals for approx. 2 seconds*3 • Continuous beeps*4	 Lights up*2	Any door (including the tailgate) is open. Close all doors completely

For Vehicle With SUZUKI SAFETY SUPPORT

When	Warning buzzer	Instrument cluster	Cause and remedy
When driving	Interior buzzer • Beeps at short intervals	*2	The Dual Sensor Brake Support II (DSBS II) is activated. Depress the brake pedal firmly.
When stopping or backing up the vehicle	Interior buzzer • Short beeps at long intervals, short beeps at short intervals, short beeps at very short intervals, or continuous beeps	–	Rear parking sensors detect an obstacle on the rear side of the vehicle. Check the surrounding area directly with your eyes and the mirrors, and back up the vehicle slowly.
When driving or backing up the vehicle	Interior buzzer • Beeps at short intervals	–	Blind Spot Monitor or rear cross traffic alert detect an obstacle on the rear side of the vehicle. Check the surrounding area directly with your eyes and the mirrors, and back up the vehicle slowly.
When driving	Interior buzzer • Beeps at short intervals	*2	The distance from the preceding vehicle is too close, such as when a vehicle cut in front of your vehicle while the adaptive cruise control is operating. Depress the brake pedal to maintain appropriate distance from the preceding vehicle.
	Interior buzzer • Continuous beeps	*2	While the adaptive cruise control was operating, the system has been canceled or your vehicle has stopped following the preceding vehicle. Check the vehicle condition and set the vehicle speed again.
	Interior buzzer • Beeps at short intervals	*2	The adaptive cruise control could not be set. Check the vehicle condition and set the vehicle speed again.

When	Warning buzzer	Instrument cluster	Cause and remedy
When driving	Interior buzzer • Short beep	*2	The vehicle swaying warning has activated. Check the road conditions, carefully operate the steering wheel and return to the center of the lane.
	Interior buzzer • Beeps at short intervals	*2	The lane departure prevention has activated. Check the road conditions, carefully operate the steering wheel and return to the center of the lane.
	Interior buzzer • Beeps at short intervals*5	*2	The lane departure warning has activated. Check the road conditions, carefully operate the steering wheel and return to the center of the lane.
When driving	Interior buzzer • Beeps at short intervals	*2	The hands off steering wheel warning has activated. Hold the steering wheel firmly.
	Interior buzzer • Continuous beeps	*2	The hands off steering wheel warning has activated and lane keep assist has stopped. Hold the steering wheel firmly.
	Interior buzzer • Short beep	*2	The lane keep assist has been canceled. Check the road conditions and set the lane keep assist again.
When operate the gearshift lever with depressing the brake pedal.	Interior buzzer • Beeps at short intervals	–	Even though the gearshift lever is shifted, the gear is not shifted to the desired selector position. Shift the gearshift lever into “P” with depressing the brake pedal, and then operate the gearshift lever again.
When operate the gearshift lever without depressing the brake pedal.	Interior buzzer • Continuous beeps	–	

*5 You can select “Vibration” via the setting mode of the information display.
For details, refer to “Setting Mode” (P.4-29).

FOR SAFE DRIVING

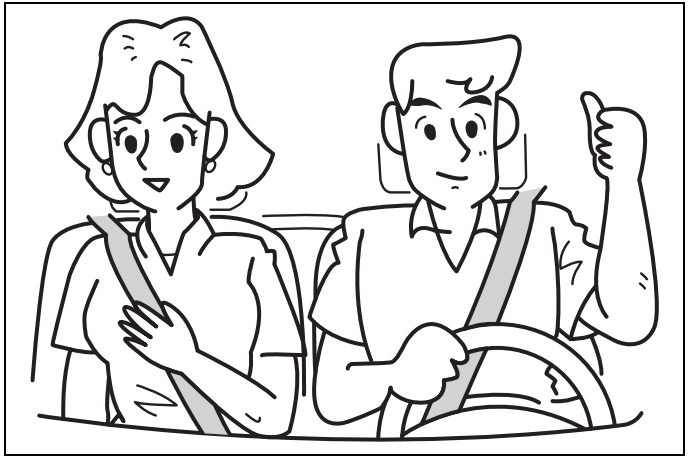

59RN02300

Driver's Seat Floor 2-1
Seat Belts and Child Restraint Systems 2-2
Front Seats 2-5
Tilt / Telescoping (if equipped) Steering Lock Lever 2-8
Mirrors 2-8
Rear Seats 2-13
Seat Utility 2-14
Safety for Child 2-16
Seat Belt 2-20
Handling and Care for Seat Belt 2-26
Seat Belt Pretensioner System (Only for Front Seat) 2-27
Seat Belt Force Limiter System (Only for Front Seat) 2-29
Child Restraint Systems 2-30
Selecting an Appropriate Child Restraint System 2-32
Supplemental Restraint System (Airbags) 2-46
When Driving the Vehicle with SRS Airbag System 2-48
Handling for Airbags 2-52
Function of Airbags 2-54
When Starting the Engine 2-61
When Loading the Luggage 2-63

Driver's Seat Floor

Floor Mats

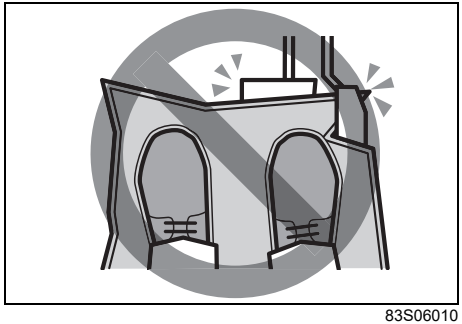

83S06010

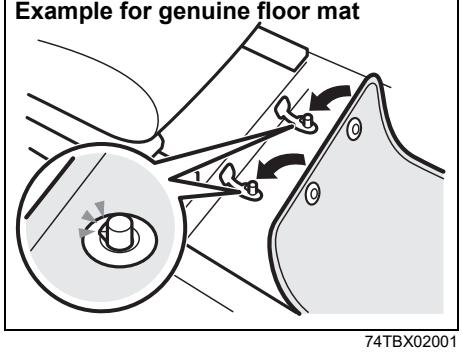

74TBX02001

To prevent the driver's side floor mat from sliding forward and possibly interfering with the operation of the pedals, SUZUKI genuine floor mats are recommended.
Whenever you put the driver's side floor mat back in the vehicle after it has been removed, hook the floor mat grommets to the fasteners and position the floor mat properly in the footwell.

When you replace the floor mats in your vehicle with a different type such as all-weather floor mats, we highly recommend to use SUZUKI genuine floor mats for proper fitting.

⚠ WARNING

Failure to take the following precautions may result in the driver's side floor mat interfering with the pedals and causing a loss of vehicle control or an accident.

Description of warning label



- **Slid forward floor mat could interfere with the operation of the pedals and lead to unexpected accident.**



- **Check that the floor mat grommets are hooked to the fasteners.**

(Continued)

⚠ WARNING

(Continued)



- **Never stack floor mats because it may prevent from securing to the fasteners and cause sliding forward.**



- **For more details, read this owner's manual.**

- **Never use a floor mat which does not fit the floor contours.**

Clearing the Floor

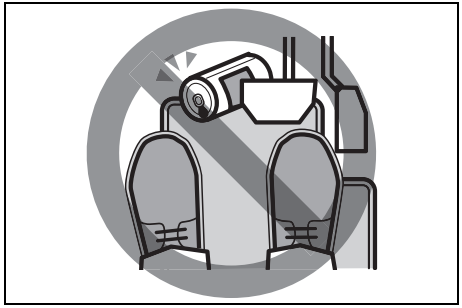

74TBX02002

⚠ WARNING

Do not leave empty cans, etc. at your feet. These objects may interfere with pedal operation and cause accidents.

Seat Belts and Child Restraint Systems

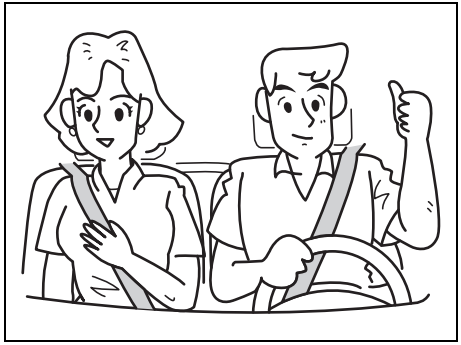

59RN02300

⚠ WARNING

- **Wear your seat belts at all times.**
- **An airbag supplements or adds to the frontal collision protection offered by seat belts. The driver and all passengers must be properly restrained by wearing seat belts at all times, whether or not an airbag is mounted at their seating position, to minimize the risk of severe injury or death in the event of a collision.**

(Continued)

⚠ WARNING

(Continued)

- **Do not modify, remove, disassemble seat belts. Doing so may prevent them from functioning properly and cause the risk of severe injury or death in the event of a collision.**

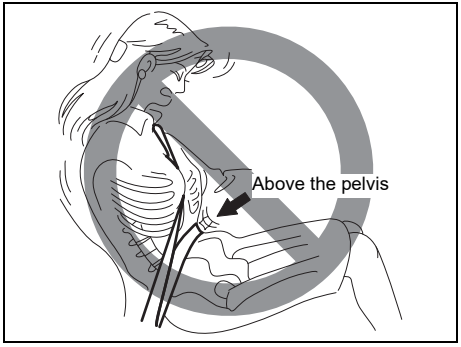

74TBX02004

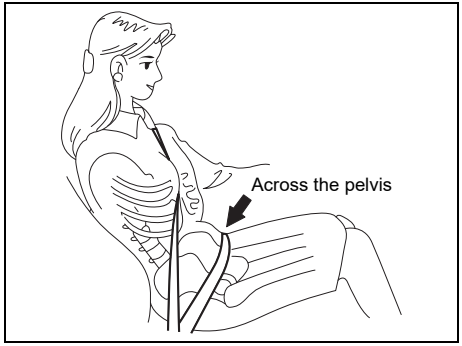

74TBX02005

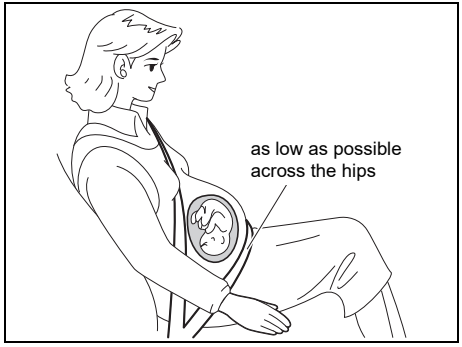

74TBX02006

⚠ WARNING

- **Never allow persons to ride in the cargo area of a vehicle. In the event of an accident, there is a much greater risk of injury for persons who are not riding in a seat with their seat belt securely fastened.**
- **Ensure that all seat belts are worn correctly. An improperly worn seat belt increases the risk of injury or death if a collision occurs.**
- **Seat belts should always be adjusted as follows:**
  - **– the lap portion of the belt should be worn low across the pelvis, not across the waist.**
  - **– the shoulder straps should be worn on the outside shoulder only, and never under the arm.**
  - **– the shoulder straps should be away from your face and neck, but not falling off your shoulder.**

- **Seat belts should never be worn with the straps twisted and should be adjusted as tightly as is comfortable to provide the protection for which they have been designed. A slack belt will provide less protection than a snug belt.**

(Continued)

⚠ WARNING

(Continued)

- **Check that seat belt latch plate (tongue) is inserted into the proper buckle especially in the rear seats. It is not possible to insert into the wrong buckles in the rear seats.**
- **Pregnant women should use seat belts, although specific recommendations about driving should be made by the woman's medical advisor. Remember that the lap portion of the belt should be worn as low as possible across the hips, as shown in the illustration.**
- **Do not fasten your seat belt over hard or breakable objects in your pockets or on your clothing. If an accident occurs, objects such as glasses, pens, etc. under the seat belt can cause injury.**



59RN020060

(Continued)

⚠ WARNING

(Continued)

- **Do not hold a child on a passenger's lap. Even if the passenger holds the child tightly, he/she would not be supported enough in the event of an accident and it could result in a serious injury of the child.**
- **Never use the same seat belt for more than one occupant and never attach a seat belt over an infant or child being held on an occupant's lap. Such seat belt use could cause serious injury in the event of an accident.**
- **Periodically inspect seat belt assemblies for excessive wear and damage. Seat belts should be replaced if webbing becomes frayed, contaminated or damaged in any way. It is essential to replace the entire seat belt assembly after it has been worn in a severe impact, even if damage to the assembly is not obvious.**
- **Children aged 12 and under should ride properly restrained in the rear seat.**

(Continued)

⚠ WARNING

(Continued)

- **Infants and small children should never be transported unless they are properly restrained. Restraint systems for infants and small children can be purchased locally and should be used. Check that the system you purchase meets applicable safety standards. Read and follow all the directions provided by the manufacturer.**
- **For child, if the seat belt irritates the neck or face, use a child restraint system appropriately for the child. The seat belts of your vehicle are principally designed for persons of adult size.**
- **Avoid contamination of seat belt webbing by polishes, oils, chemicals, and particularly battery acid. Cleaning may safely be carried out using mild soap and water.**
- **Do not insert any items such as coins and clips into the seat belt buckles, and be careful not to spill liquids into these parts. If foreign materials get into a seat belt buckle, the seat belt may not work properly.**
- **All seatbacks should always be in an upright position when driving, or seat belt effectiveness may be reduced. Seat belts are designed to offer maximum protection when seatbacks are in the upright position.**

Adjustment before Driving

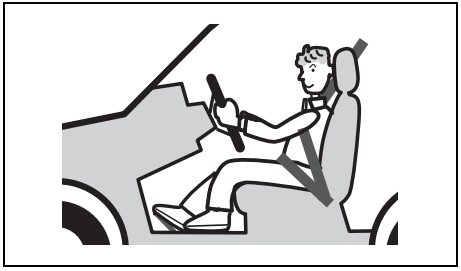

74TBX02008

⚠ WARNING

- **When driving, do not adjust the steering wheel (only adjustable type with certain specifications), the seat, the inside rearview mirror or the outside rearview mirrors. Otherwise, there is the risk of mistaken operation of the steering wheel or reduced awareness of what is in front of you, possibly leading to an accident.**
- **Do not tilt the seatback further back than necessary. Otherwise, the head restraint and the seat belt cannot function as intended.**

Correct Use of Seat Belt

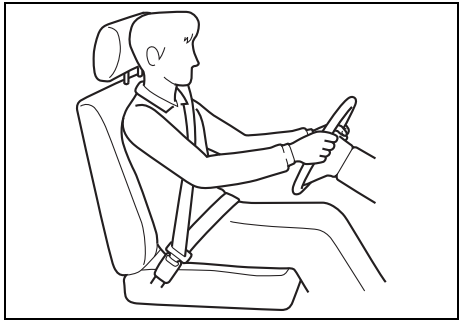

74U020023

- Adjust the seat to the correct position. Sit your body fully into the seat.
- Make sure that the seat belt is not twisted.
- Make sure that you place the lap portion of the belt as low as possible across the pelvis.
- The upper belt should rest on the area midway between the shoulder and the base of the neck.
- Confirm that the belt is not twisted in any way, and remove any slack.

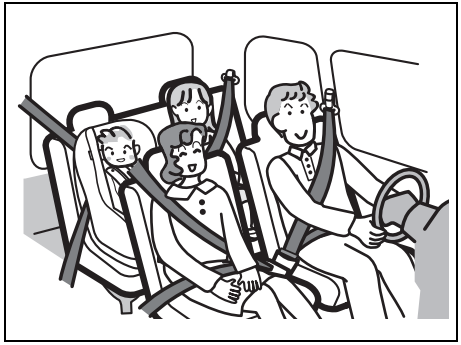

74U020024

⚠ WARNING

- **If you do not fasten your seat belt properly, your body may not be restrained in a sudden braking and a collision. This may cause severe injury.**
  Fasten your seat belt properly before driving.
- **If all the passengers do not fasten their seat belts properly, their body may not be restrained in a sudden braking and a collision. This may cause severe injury.**
  Ask all the passengers on the front passenger's seat and the rear seats to fasten their seat belts properly before driving.

Front Seats

Seat Adjustment

⚠ WARNING

- **Never attempt to adjust the driver's seat or seatback while driving. The seat or seatback could move unexpectedly, causing loss of control. Check that the driver's seat and seatback are properly adjusted before you start driving.**
- **To avoid excessive seat belt slack, which reduces the effectiveness of the seat belts as a safety device, check that the seats are adjusted before the seat belts are fastened.**
- **All seatbacks should always be in an upright position when driving, or seat belt effectiveness may be reduced. Seat belts are designed to offer maximum protection when seatbacks are in the upright position.**

(Continued)

⚠ WARNING

(Continued)

- **If you place a cushion, etc. between the seatback and your back, you may not be able to drive the vehicle in a correct posture. Also, the seat belt and the head restraint may not provide the best performance. This may cause severe injury in an accident.**
  Do not place a cushion, etc. between the seatback and your back.
- **Do not place any object under the front seat. If an object gets stuck under the front seat, the seat shall not be latched properly and may cause injury.**
- **Do not leave cigarette lighters or spray cans on the floor. If a cigarette lighter or spray can is on the floor, it may light accidentally when luggage is loaded or the seat is adjusted, causing a fire.**

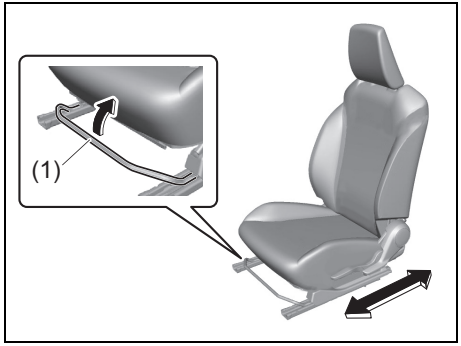

74U020006

Seat position adjustment lever (1)
Pull the lever up and slide the seat.

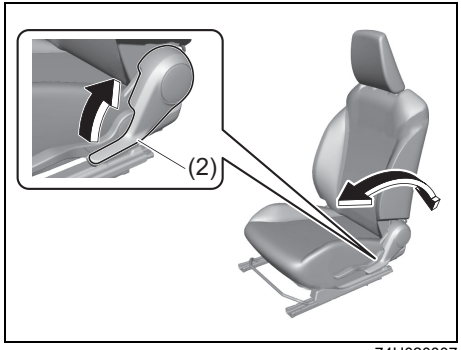

74U020007

Seatback angle adjustment lever (2)
Pull the lever up and move the seatback.

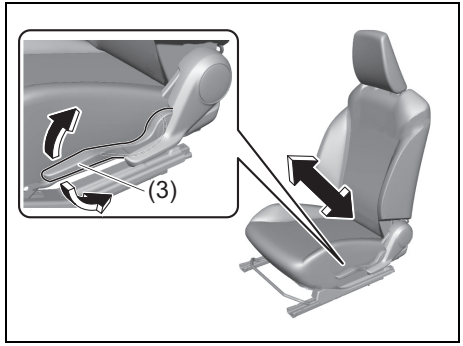

74U020008

Seat height adjustment lever (3) (if equipped)
Pull the lever up to raise the seat. Push the lever down to lower the seat.

After adjustment, move the seat and seatback back and forth to check if it is securely latched.

NOTE:
To operate the seatback smoothly, pull the seatback adjustment lever (2) in upward direction. Ensure to move seatback only after lever is moved to fully up position. After adjustment of seatback, release the lever gently. Check that seatback is locked by moving it forward and backward.

Head Restraints

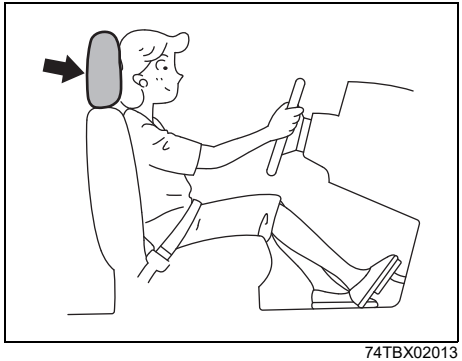

74TBX02013

Head restraints are designed to help reduce the risk of neck injuries in the case of an accident. Adjust the head restraint to the position which places the center of the head restraint closest to the top of your ears. If this is not possible for very tall passengers, adjust the head restraint as high as possible.

⚠ WARNING

- **If you drive the vehicle with the head restraint removed, a passenger's backward tilting cannot be prevented in a collision from the backward and the impact to a passenger's head cannot be reduced in a sudden braking or a collision. This may cause severe injury.**
  Never drive the vehicle with the head restraints removed.
- **If the head restraint is installed back to front or it is not installed securely, the head restraint may not provide the best performance in case of emergency, resulting in severe injury.**
  If the head restraint is installed back to front, you cannot adjust the height and install it securely.
  Make sure to install the head restraint securely in the right direction.
- **Being distracted by head restraint adjustment could lead to an accident.**
  Do not attempt to adjust the head restraint while driving.

NOTE:
It may be necessary to recline the seatback to provide enough overhead clearance to remove the head restraint.

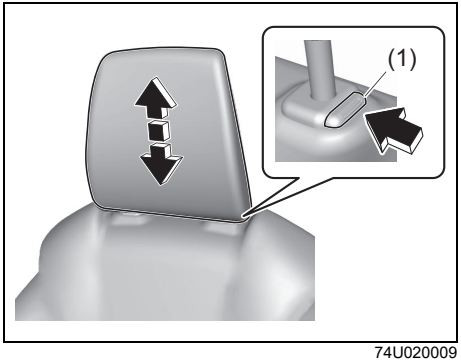

74U020009

To raise the front head restraint, pull upward the head restraint until it clicks. To lower the head restraint, push down the head restraint while holding in the lock button (1). If a head restraint must be removed (for cleaning, replacement, etc.), push in the lock button (1) and pull the head restraint all the way out.

Tilt / Telescoping (if equipped) Steering Lock Lever

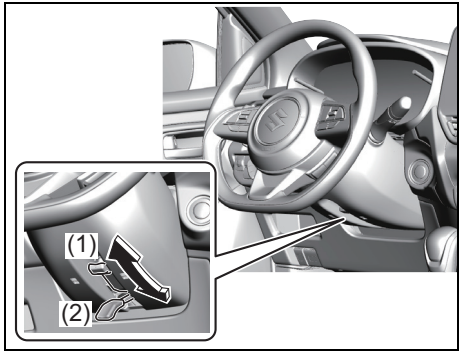

74U020010

(1) LOCK
(2) UNLOCK

The lock lever is located under the steering column. To adjust the steering wheel height:

1) Push down the lock lever to unlock the steering column.
2) Adjust the steering wheel to the desired height and fore-aft position and lock the steering column by pulling up the lock lever.
3) Try moving the steering wheel up and down back and forth to check that it is securely locked in position.

⚠ WARNING

Never attempt to adjust the steering wheel while the vehicle is moving or you could lose control of the vehicle.

Mirrors

⚠ WARNING

Failure to observe following point may result in loss of vehicle control and cause an accident, leading to death or serious injury. Always follow below points while driving.

- **Always unfold all the outside rear-view mirrors and adjust properly before driving.**
- **Do not place objects in the rear of the vehicle which may hinder visibility or interfere with your vision from the rear window glass.**

Inside Rearview Mirror

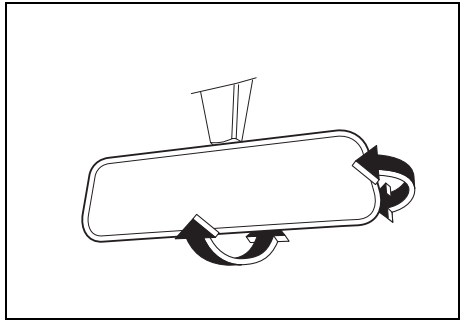

74TBX02016

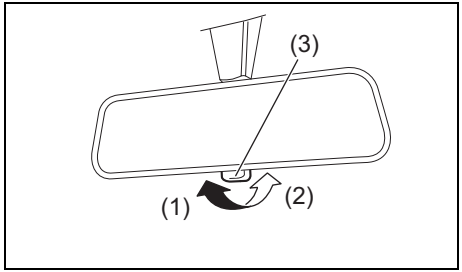

74TBX02017

(1) Night driving
(2) Day driving
(3) Selector tab

You can adjust the inside rearview mirror by hand to see the rear of your vehicle in the mirror. To adjust the mirror, set the selector tab (3) to the day position, then move the mirror up, down or sideways by hand to obtain the best view.
When driving at night, you can move the selector tab (3) to the night position to reduce glare from the headlights of vehicles behind you.

⚠ WARNING

- **If you adjust the inside rearview mirror while driving, you could lose control of the vehicle, resulting in an accident.**
  Adjust the inside rearview mirror before driving.
- **Only use the night position if it is necessary to reduce glare from the headlights of vehicles behind you. Be aware that in this position you may not be able to see some objects that could be seen in the day position.**

⚠ CAUTION

Do not modify the inside rearview mirror or install a non-genuine wide mirror. It could result in injury during accident.

Outside Rearview Mirrors

Adjust the outside rearview mirrors so you can just see the side of your vehicle in the mirrors.

⚠ WARNING

If you adjust the outside rearview mirrors while driving, you could lose control of the vehicle, resulting in an accident.
Adjust the outside rearview mirrors before driving.

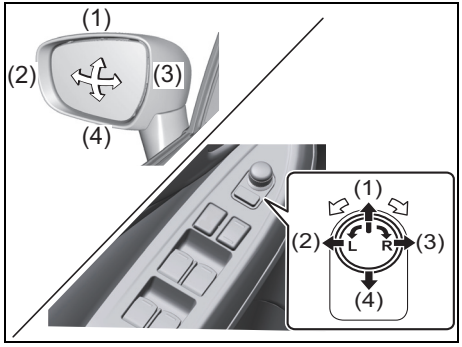

74U020011

The switch to control the electric mirrors is located on the driver's door panel. You can adjust the mirrors when the ignition switch is in "ACC" or "ON" position, or the ignition mode is ACC or ON. To adjust the mirrors:

1) Move the selector switch to the left or right to select the mirror you wish to adjust.
2) Press the outer part of the switch that corresponds to the direction in which you wish to move the mirror.
3) Return the selector switch to the center position to help prevent unintended adjustment.

NOTICE

- **The electric type outside rearview mirror operates even though the ignition switch is in the ACC position. However, to prevent unnecessary battery discharge, do not adjust the mirrors longer than necessary while the engine is not running.**
- **The mirrors stop moving when they reach the maximum adjusting angles, but the motor continues to operate while the switch is pressed. Do not continue to press the switch in such a situation as the motor may be damaged.**
- **Do not attempt to adjust the outside rearview mirror by hand which may cause damage to the motor.**
- **Do not fold the electrical foldable outside rearview mirror by hand. It could cause motor failure.**

Outside Rearview Mirror Folding Switch

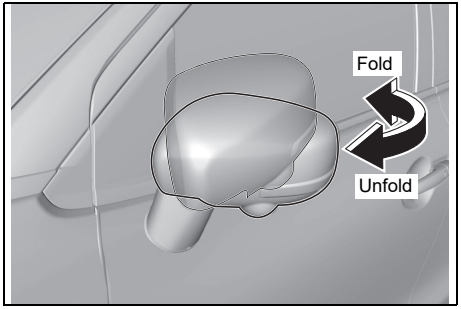

74U020012

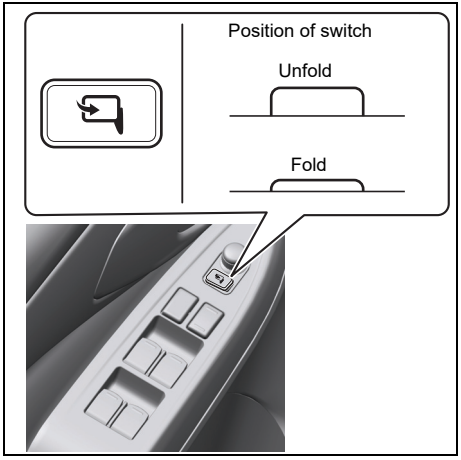

74U020013

You can fold the mirrors when you park the vehicle in a narrow space. Push the folding switch to fold and unfold the mirrors. Make sure the mirrors are completely unfolded before you start driving.

⚠ WARNING

If you drive the vehicle with the outside rearview mirrors folded, it may result in an accident.
Do not drive the vehicle with the outside rearview mirrors folded.

⚠ CAUTION

Moving mirrors can pinch and injure a hand. Do not allow anyone's hand to get near the mirrors when folding and unfolding the mirrors.

NOTE:
- *If you press the folding switch to open the outside rearview mirrors and simultaneously start the engine, then the outside rearview mirrors may get stuck during that moment. To open the outside rearview mirrors completely, again press the folding switch after starting the engine.*
- *Slight time difference in opening of both outside rearview mirrors is due to angular positioning of the driver seat.*

Remote Folding Mirrors (if equipped)

When the outside rearview mirror folding switch is in the unfolded position, the outside rearview mirrors are folded or unfolded in conjunction with the door locking or engine switch operation.
- When you lock the doors (including the tailgate) by using the remote controller or pushing the request switch, the mirrors will be folded automatically.
- To unfold the mirrors, push the engine switch to change the ignition mode to ACC or ON.
- The factory setting is that the function is enabled. You can switch the function from enabled to disabled, and vice versa. To switch the function for your preference, refer to "How to switch the remote folding mirror function" in this section.

NOTICE

In a cold winter such as the mirrors are frozen, disable the function. If the mirrors are folded and unfolded repeatedly without thawing, the mirrors may be damaged.

NOTE:
- *If the doors are locked by using the key or lock knob, the mirrors will not be folded automatically.*
- *If the outside rearview mirror folding switch is in the folded position, the mirrors will not be unfolded automatically, even when the engine switch is pushed to change the ignition mode to ACC or ON.*
- *If any of the doors is not opened within about 30 seconds after the doors are unlocked by using the keyless push start system remote controller or request switch, the doors will be locked again and the mirrors will be folded automatically.*

How to switch the remote folding mirror function

When the ignition mode is LOCK (OFF), you can switch the function from the enabled state to the disabled state, and vice versa, using the following method.

1) Sit in the driver's seat and make sure that all doors are closed.
   • If any door is open, the open door warning light comes on.

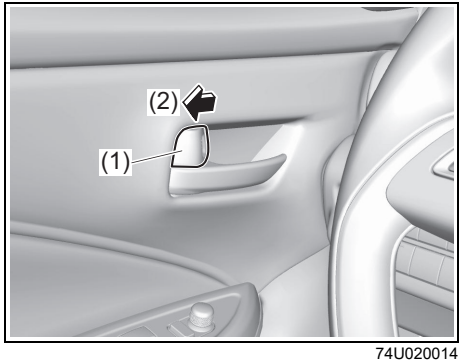

74U020014

2) Turn the lock knob (1) on the driver's door rearward (2).

NOTE:
All operations included in the following steps 3) and 4) must be completed within 15 seconds.

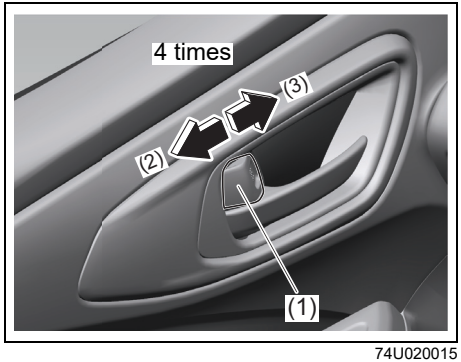

74U020015

3) Turn the lock knob (1) on the driver's door forward (3) to lock the doors, and then turn rearward (2) to unlock the doors. Repeat this operation 4 times.

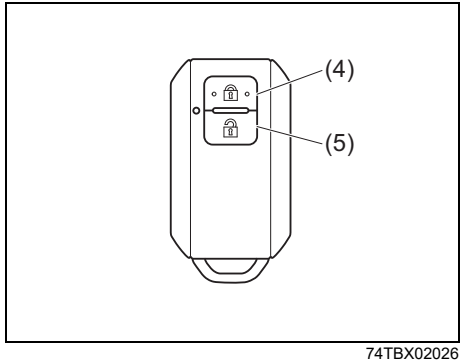

74TBX02026

(4) LOCK button
(5) UNLOCK button

4) Push any of the buttons on the keyless push start system remote controller 3 times.
   • Push any buttons described above you like.
   • During operation, the doors are not locked, unlocked, opened or closed.

Every time you perform the series of the above steps, the state of the remote folding mirror function changes from the currently selected one to the other. You can check whether the system is enabled or disabled by the number of interior buzzer beeps at the end of the procedure as follows.

System state	Number of beeps
Disabled	Once
Enabled	• Twice*1 • Once*2

*1 Vehicle without SUZUKI SAFETY SUPPORT
*2 Vehicle with SUZUKI SAFETY SUPPORT

- If you cannot complete the operations in step 3) and 4) within 15 seconds correctly, the state of the remote folding mirror function will not change and the interior buzzer does not beep. Perform the procedure again from the beginning.

Rear Seats

Head Restraints

Head restraints are designed to help reduce the risk of neck injuries in the case of an accident.

⚠ WARNING

- **If you drive the vehicle with the head restraint removed, a passenger's backward tilting cannot be prevented in a collision from the backward and the impact to a passenger's head cannot be reduced in a sudden braking or a collision. This may cause severe injury.**
  Never drive the vehicle with the head restraints removed.
- **If the head restraint is installed back to front or it is not installed securely, the head restraint may not provide the best performance in case of emergency, resulting in severe injury.**
  If the head restraint is installed back to front, you cannot adjust the height and install it securely.
  Make sure to install the head restraint securely in the right direction.

(Continued)

⚠ WARNING

(Continued)

- **Being distracted by head restraint adjustment could lead to an accident.**
  Do not attempt to adjust the head restraint while driving.
- **If you try to install a child restraint system and it touches the head restraint, a child may be severely injured in a collision.**
  When you install a child restraint system, adjust the height of the head restraint as high as possible or remove the head restraint for avoiding that the child restraint system touches the head restraint.

⚠ CAUTION

If you leave the removed head restraint in the vehicle, it may jump out and hit passengers or objects, resulting in injury or damage.
Do not leave the removed head restraint in the vehicle.

NOTE:
It may be necessary to fold forward the seatback to provide enough overhead clearance to remove the head restraint.

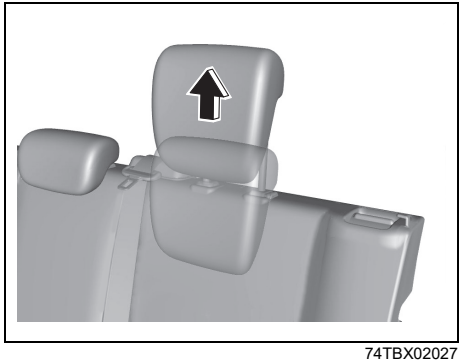

74TBX02027

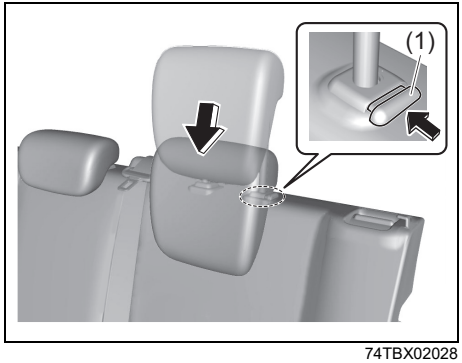

74TBX02028

To raise the rear head restraint, pull up the head restraint until it clicks. To lower the head restraint, push down the head restraint while holding in the lock button (1). If a head restraint must be removed (for cleaning, replacement, etc.), push in the lock button (1) and pull the head restraint all the way out.

When installing a child restraint system, adjust the height of the head restraint or remove it for fitting the child restraint system, as necessary.

Rear center head restraint

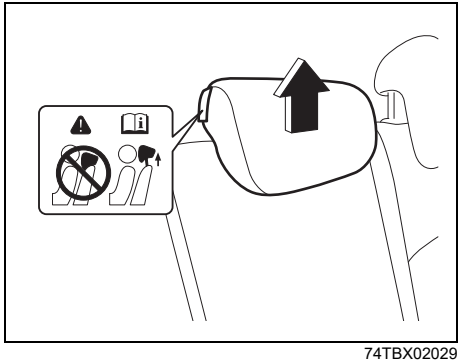

74TBX02029

When using the rear center head restraint, pull it up and lock it securely before driving.

⚠ WARNING

Do not allow anyone to sit in the rear center seat with the rear center head restraint removed or in stowed position.

Seat Utility

Folding Rear Seats

⚠ WARNING

When you move a seatback, make sure the belt webbing is hooked in the seat belt guides so the seat belts are not caught by the seatback, seat hinge, or seat latch. This helps prevent damage to the belt system.

The rear seats of your vehicle can be folded forward to provide additional cargo space.

To fold the rear seats forward:

1) Lower the head restraint fully.

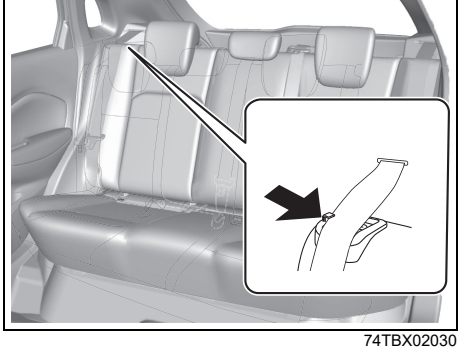

74TBX02030

2) Hook the webbing of the outboard lap-shoulder belts in the belt guides.

NOTICE

Make sure the belt webbing is not twisted.

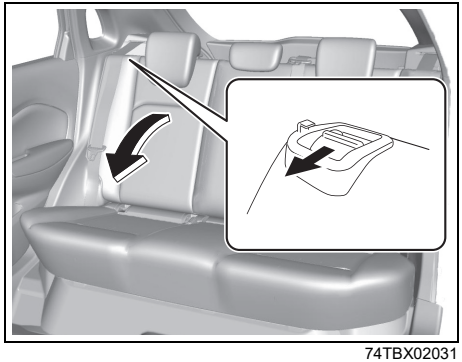

74TBX02031

3) Slide the release lever on the top of each split seat in arrow direction, and fold the seatbacks forward.

NOTICE

After folding the rear seatback forward, do not allow any foreign material to enter the lock opening. This may cause damage to the inside of the lock and prevent the seatback from being locked securely.

⚠ WARNING

If you need to carry cargo in the passenger compartment with the rear seatback folded forward, secure the cargo or it may be thrown about, causing injury. Never pile cargo higher than the seatbacks.

To return the seat to the normal position, follow the procedure below.

⚠ WARNING

When you move a seatback, make sure the belt webbing is hooked in the seat belt guides so the seat belts are not caught by the seatback, seat hinge, or seat latch. This helps prevent damage to the belt system.

⚠ CAUTION

When returning the rear seatback to the normal position, be careful that your finger is not caught between the lock and the striker.

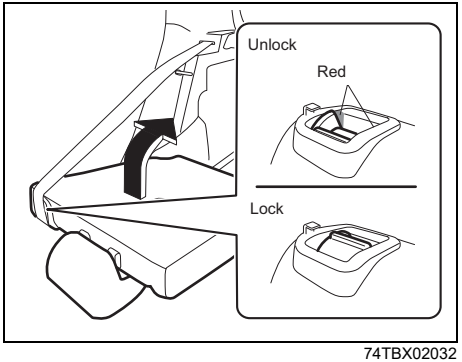

74TBX02032

Raise the seatback until it locks into place.

After returning the seat, move the seatback back and forth to check if it is securely latched.

⚠ CAUTION

- **Do not put your hand into the rear seatback lock opening, or your finger may get caught and be injured.**
- **After securing the rear seatback, check that it is locked securely. If it is not, red will appear in the release lever.**

NOTICE

- **When returning the rear seatback to the normal position, do not allow any foreign material to enter the lock opening. This may prevent the seatback from being locked securely.**
- **When returning the rear seatback to the normal position, handle it carefully by hand to avoid any damage to the lock itself. Do not push it by using some material or by applying excessive force.**
- **As the lock is designed exclusively for securing the rear seatback, do not use it for any other purpose. Incorrect use of it may cause damage to the inside of the lock and prevent the seatback from being locked securely.**

Safety for Child

For safety, carefully drive at lower speed than usual.

Place a Child in the Rear Seat

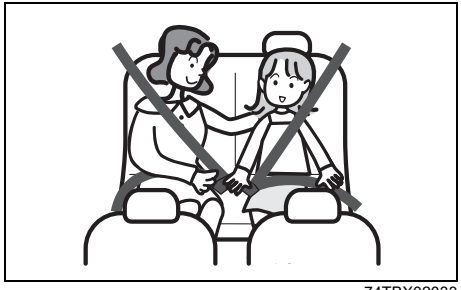

74TBX02033

- Seat a child next to an adult when possible, and ensure that the child can be visually monitored.
- Select an appropriate child restraint system suitable for the child's age and physical size.

⚠ WARNING

- **If you do not use the child-proof lock, a child may open a door and the child may be thrown out, resulting in severe injury. To avoid this, use the child-proof lock setting.**
- **When it is necessary to seat the child who does not need a child restraint system in the front passenger's seat, observe the following point.**
  - **Slide the front passenger's seat all the way back. If the front passenger's seat is in a forward position, there is a risk of serious injury due to major impact if the front passenger's seat airbag was to be deployed.**

(Continued)

⚠ WARNING

(Continued)



74TBX02034

– If a child put a hand out of the window or lean on a door, the child may get severe injury by a strong impact of side or curtain airbag activation.
Do not allow a child to put hand out of the window or lean on a door.

- **Do not allow the hands or feet, etc., of a child near movable parts inside a vehicle, such as the armrests and the seat rails. Otherwise, there is the possibility of injury.**

A Child Needs to Wear Seat Belt

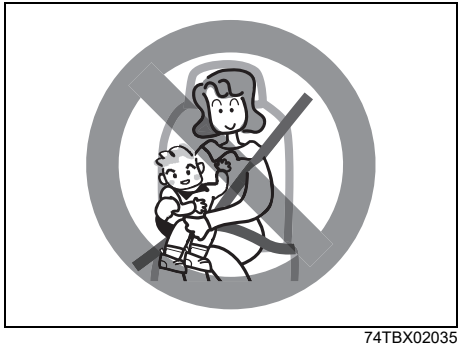

74TBX02035

⚠ WARNING

- **Do not drive with a child on your lap. Even if you hold the child tightly, proper support is not possible, and in the event of a collision, etc., the child may get serious injury.**
- **If a child does not wear a seat belt, in a sudden braking and a collision, the child may get serious injury.**
Be sure to always have a child wear a seat belt.

(Continued)

⚠ WARNING

(Continued)

- **If two or more people use a single seat belt, in a sudden braking and a collision, the seat belt may not provide the best performance, resulting in severe injury.**
Do not allow two or more people to use a single seat belt.



74TBX02036

⚠ WARNING

- **The seat belts of this vehicle are designed to be suitable for occupants of adult size. If the shoulder strap rests on the neck or chin of a child rather than the shoulder, or if the lap portion of the belt does not rest securely on the hipbone, ensure that the child is seated in a child restraint system placed in the rear seat. Failure to properly use a seat belt may result in serious injury to the child.**
- **Use a child restraint system securely fastened to the rear seat for any child that cannot hold their head upright or sit on their own.**

Do not Let a Child Play with Seat Belt

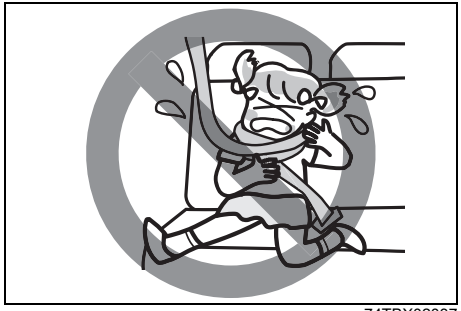

74TBX02037

⚠ WARNING

If a child play with a seat belt, for example, if the child's body is wrapped by the seat belt, it may cause severe injury such as suffocation. In case of emergency, cut the seat belt with scissors.

Using the Child Restraint System

Refer to “Securing Child Restraint System by Seat Belt” in this section.

An Adult Needs to Open or Close Each Door or Window, and Adjust Seats

Only an adult should open or close each door or window and adjust seats, not to get a child’s hands, arms, legs or neck, etc. caught in.



74TBX02038

⚠ WARNING

- **If the windows are not locked, a child may operate the windows by mistake or the other passengers may be caught in the windows. To avoid unintended operation of the power window by a child, use the window lock switch.**
- **If you leave the power window in ready condition, it may cause unintended operation of the power window by a child, resulting in an accident.**
  When you leave the vehicle, make sure to press the engine switch to change the ignition mode to OFF or turn the ignition switch to "OFF" position, keep the key with you and leave the vehicle with your child.

Do not Let a Child Stick His/her Head or Hands out of the Window

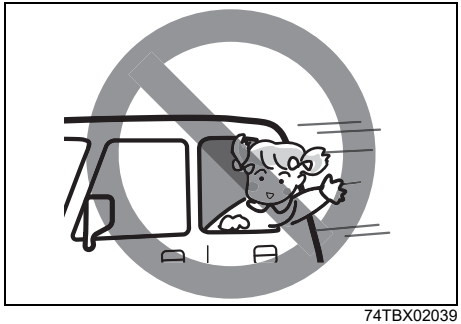

74TBX02039

⚠ WARNING

Ensure that a child does not put their hands or heads, etc., out the windows. Otherwise, serious injuries due to falling out or sudden braking may occur. Moreover, serious injury could also occur if a child were to come into contact with objects outside the vehicle.

Do not Leave a Child Unattended in the Vehicle

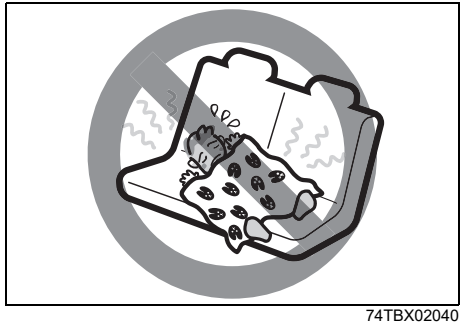

74TBX02040

⚠ WARNING

When getting out of the vehicle, do not allow a child to stay in the vehicle without you.

- **Unintended and wrong operations by a child may cause a fire or an accident from the vehicle start.**
- **As the inside temperature of the vehicle will become hot under the blazing sun, a child may suffer from heat stroke or dehydration, resulting in severe health problems or death in the worst case. Even if you turn on the air conditioner, do not leave a child alone in the vehicle.**

Do not Place a Child in Luggage Compartment

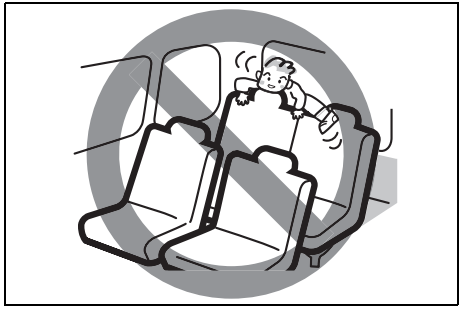

74TBX02041

⚠ WARNING

The luggage areas do not feature a structure that can accommodate people. Do not allow a child to ride in such areas. Otherwise, there is the danger of accidents due to sudden braking, etc. Do not let a child play in luggage areas even while the vehicle is stopped on the road.

Seat Belt

A Child Needs to Wear Seat Belt

Refer to “Safety for Child” in this section.

Information for Pregnant Woman and the Sick Person

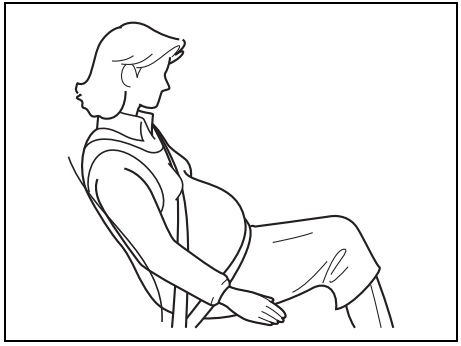

74TBX02042

⚠ WARNING

- **Those that are pregnant or sick/disabled must also wear their seat belts. However, in the event of a collision, there is the danger of heavy pressure focused on certain body areas. Consultation with a physician is recommended.**
- **For those that are pregnant, ensure that the lap portion of the belt is as low as possible across the pelvis, avoiding to touch the abdomen. Make sure that the shoulder strap rests halfway between the shoulder and the base of the neck, crossing the chest and avoiding to touch the abdomen.**

Lap-shoulder Belt

Emergency locking retractor (ELR)

The seat belt has an emergency locking retractor (ELR), which is designed to lock the seat belt only during a sudden stop or impact. It also may lock if you pull the belt across your body very quickly. If this happens, let the belt go back to unlock it, and then pull the belt across your body more slowly.

Safety reminder

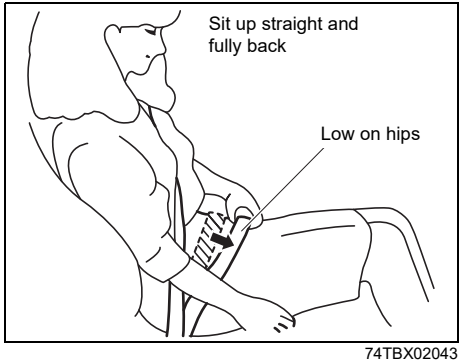

74TBX02043

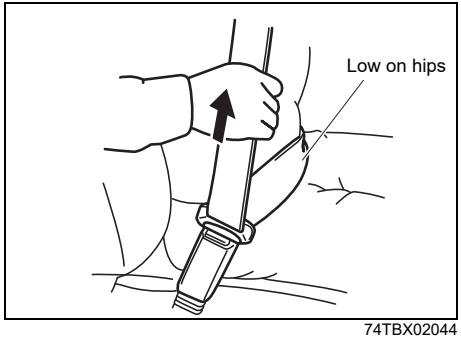

74TBX02044

To reduce the risk of sliding under the belt during a collision, position the lap portion of the belt across your lap as low on your hips as possible and adjust it to a snug fit by pulling the shoulder portion of the belt upward through the latch plate. The length of the diagonal shoulder strap adjusts itself to allow freedom of movement.

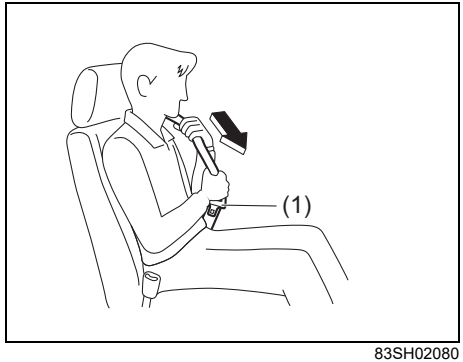

83SH02080

Holding the tongue plate (1) and the seat belt, pull out the seat belt slowly to straighten the twisted seat belt.

NOTE:
When the seat belt is locked and you cannot pull it out, release it once and then pull it out again. If you still cannot pull it out, pull the seat belt strongly, release it and then pull it out again slowly.

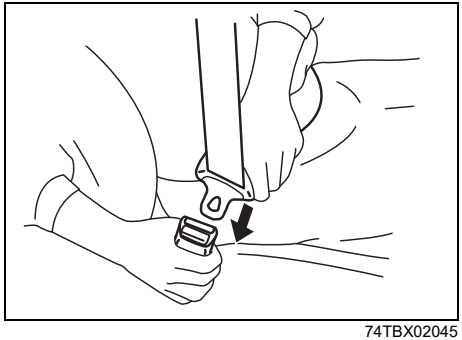

74TBX02045

To fasten the seat belt, sit up straight and far back into the seat, pull the latch plate attached to the seat belt across your body and press it straight into the buckle until you hear a click. After pressing the latch plate into the buckle, pull the seat belt to make sure it is securely latched.

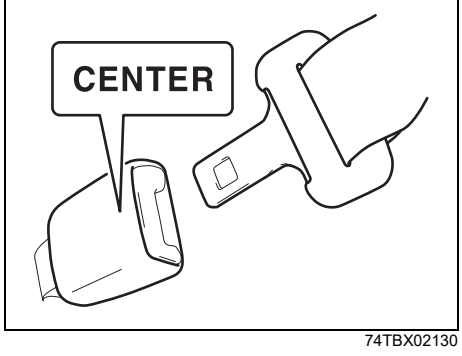

74TBX02130

NOTE:
The word "CENTER" is marked on the buckle for the rear center belt. The buckles are designed so a latch plate cannot be inserted into the wrong buckle.

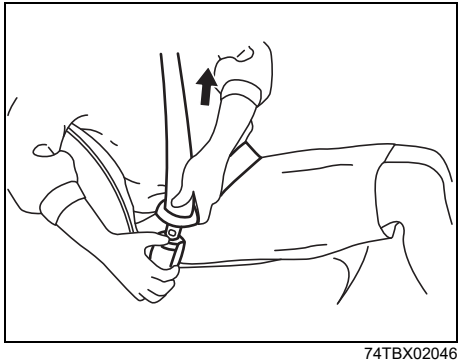

74TBX02046

To unfasten the seat belt, push the red "PRESS" button on the buckle and retract the belt slowly while holding the belt or/and the latch plate.

NOTE:
If the seat belt cannot be pulled from its fully retracted position, firmly pull the belt and release it. Then smoothly pull the belt out of the retractor.

Adjustment of Seat Belt Length

The seat belt does not require length adjustment. The seat belt extends and retracts according to the movement of the body. If the seat belt gets a strong impact, the belt locks its tension automatically, in order to secure the body.

Correct Use of Seat Belt

⚠ WARNING

Use the seat belt correctly. Otherwise, in a sudden braking or a collision, the body may not be restrained, resulting in severe injury. Observe the following points.

- **If the seat belt is twisted or contains excessive slack, there is danger of heavy pressure focused on certain body areas.**
- **If the seat belt rests on the abdomen, this area may sustain heavy pressure when you get a strong impact.**
- **If the seat belt does not rest firmly over the shoulder, you may be thrown forward when you get a strong impact.**

Seat Belt Reminder

Type A

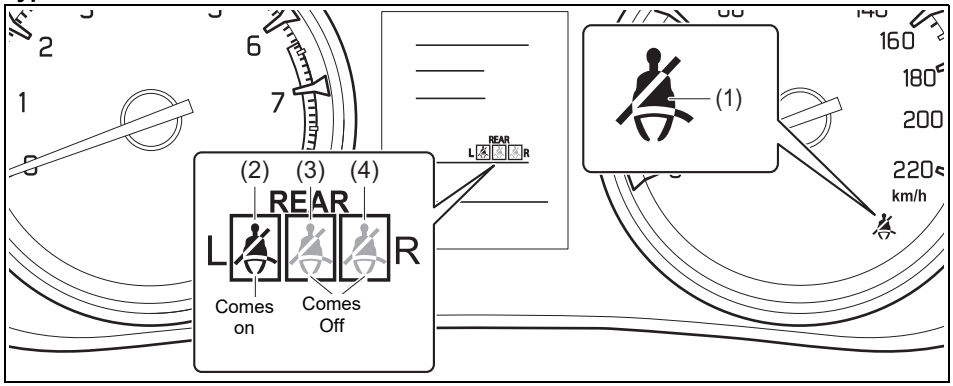

74U020001

Type B

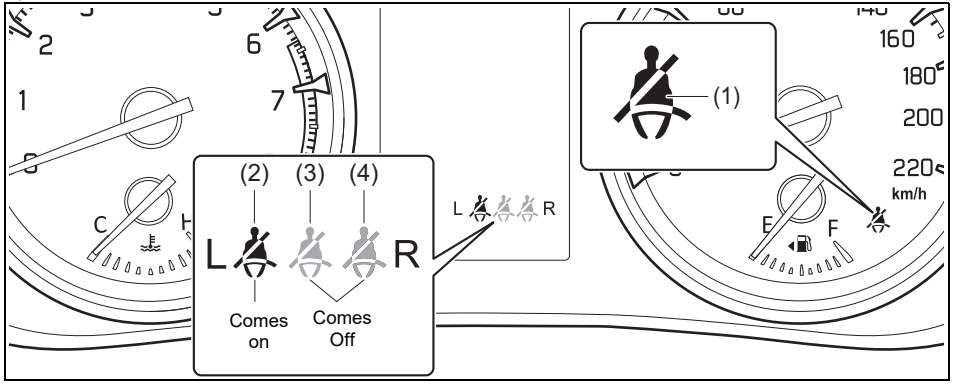

74U020002

1) Driver's seat belt reminder light / front passenger's seat belt reminder light.
2) Rear passenger's seat belt reminder-light (rear left)*1
3) Rear passenger's seat belt reminder light (rear center)*2
4) Rear passenger's seat belt reminder light (rear right)*2

*1This symbol represents that the seat belt is unfastened.
*2This symbol represents that the seat belt is fastened.

When the driver and/or passenger (front passenger and/or rear passenger) do not fasten their seat belts, the seat belt reminder lights will come on or blink and a buzzer will sound to remind the driver and/or passenger (front passenger and/or rear passenger) to fasten their seat belts. For more details, refer to the explanation below.

⚠ WARNING

It is absolutely essential that the driver, front passenger and rear passenger fasten their seat belts at all times. Persons who are not fastening seat belts have a much greater risk of injury if an accident occurs. Make a regular habit of buckling your seat belt before starting the engine.

NOTE:
When this light comes on, seat belt reminder message is displayed on information display.

Driver's seat belt reminder

If the driver's seat belt remains unbuckled when the ignition switch is turned to "ON" position or the engine switch is pressed to change the ignition mode to ON, the reminder works as follows:
1) The driver's seat belt reminder light will come on. The front passenger's seat belt reminder light will also come on if a front passenger does not fasten his/her seat belt.
2) After the vehicle's speed has reached about 15 km/h, the driver's seat belt reminder light will blink and a buzzer will sound for about 95 seconds.
3) The reminder light will remain on until the driver's seat belt is buckled.

If the driver has buckled his or her seat belt and later unbuckles the seat belt, the reminder system will be activated from Step 1) or 2) according to the vehicle's speed. When the vehicle's speed is less than 15 km/h, the reminder will start from Step 1). When the vehicle's speed is more than 15 km/h, the reminder will start from Step 2).
The reminder will be automatically canceled when the driver's seat belt is buckled or the ignition switch is turned to off, or the engine switch is pressed to change the ignition mode to LOCK (OFF).

Front passenger's seat belt reminder

If there is a person sitting in the front passenger seat and the front passenger seat belt is unbuckled when the ignition switch is turned to "ON" position or the engine switch is pressed to change the ignition mode to ON, the front passenger's seat belt reminder will activate.

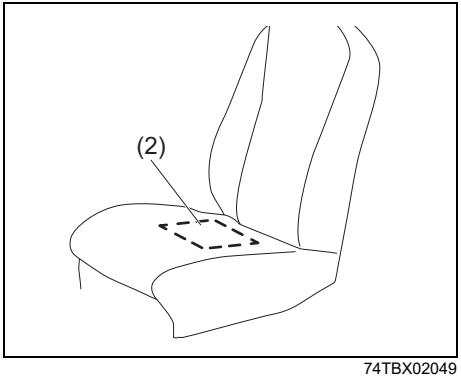

74TBX02049

(2) The sensor of the front passenger's seat belt reminder

The seat belt reminder sensor (2) detects whether a person is sitting in the front seat. The sensor of the front passenger's seat belt reminder is located in the seat cushion. The front passenger's seat belt

reminder works in the same manner as the driver's seat belt reminder.

NOTICE

- **The sensor of the front passenger's seat belt reminder is located in the seat cushion. If heavy or sharp objects are put on the seat cushion, or a removal, disassembly and modification of the passenger's seat are performed, the sensor may not work properly or can be damaged. Do not put heavy or sharp objects on the seat cushion. Do not remove, disassemble and modify the passenger's seat.**
- **Depending on the variety of seat cover, operation of the sensor may be adversely affected. SUZUKI highly recommends that you use SUZUKI genuine seat cover exclusively for this vehicle. If a seat cover is installed, consult with an authorized SUZUKI dealer or a qualified workshop.**
- **If you spill liquid such as liquid aromatics, soft drinks or juice on the front passenger's seat cushion, the sensor of the front passenger's seat belt reminder located in the seat cushion can be damaged. Immediately wipe it dry with a soft cloth when spilled.**

(Continued)

NOTICE

(Continued)

- **When sitting on the front passenger's seat, it is very important that the passenger sits upright, leaning against the seat backrest and centered on the seat cushion in order for the seatbelt reminder system to function effectively. An occupant sitting improperly (slouches, turns sideways, sits forward or sideways) may hamper the functioning of this system as it may not detect the occupant.**

NOTE:

- *If you put an object on the passenger's seat, the weight of the object will be sensed by the sensor and the front passenger's seat belt reminder light will come on and then the interior buzzer may beep.*
- *If a child or a small sized person sit on the front passenger's seat or the cushion is put on the front passenger's seat, the weight will not be sensed by the sensor and the interior buzzer may not beep.*

Rear passenger's seat belt reminder

If the ignition switch is turned to "ON" position or the engine switch is pressed to change the ignition mode to "ON", the seat belt reminder light of all rear passengers lights for irrespective of the presence or absence of passenger. When the vehicle speed reaches 15 km/h or more, the seatbelt reminder will turn off about 65 seconds later.
Also, when opening the rear seat door the rear passenger 's seat belt reminder lights will also be lit.
In the following situations, rear passenger's seat belt reminder light blinks for about 65 seconds, and the buzzer sounds for about 35 seconds at the same time.
After 30 seconds have elapsed from the stop of the buzzer, the corresponding indicator will switch from blinking to lighting.

- When the rear seat belt is removed while driving at a vehicle speed of 15 km/h (9 mph) or more.
- When the vehicle speed reaches 15 km/h (9 mph) or more after the rear seat belt has been removed with no rear door open.

The reminder will be automatically canceled when the rear seat belt is buckled or the ignition switch is turned "OFF", or the engine switch is pressed to change the ignition mode to LOCK (OFF).

Handling and Care for Seat Belt

Seat Belt Handling



74TBX02050

Periodically check if the seat belts work properly and are not damaged. Check the webbing, buckles, latch plates, retractors, anchorages and guide loops. Replace any seat belts which do not work properly or are damaged.

⚠ WARNING

- **Inspect all seat belt assemblies after any collision. Any seat belt assembly which was in use during a collision (other than a very minor one) should be replaced, even if damage to the assembly is not obvious. Any seat belt assembly even which was not in use during a collision must be replaced if the seat belt pretensioners were activated. The pretensioners and the load limiter only function once. In case they did not activate, consult with an authorized SUZUKI dealer or a qualified workshop.**
- **If frays, scratches, cuts are found on the seat belt, replace it with a new one.**
- **If the buckle does not work properly, ask an authorized SUZUKI dealer or a qualified workshop for inspection.**
- **If strong force was applied to the seat belt in a collision, the seat belt function may be damaged, even though its appearance is normal. Replace the seat belt with a new one.**

(Continued)

⚠ WARNING

(Continued)

- **As the seat belt may not provide the best performance and it may result in severe injury in case of emergency, observe the following points.**
  - **When foreign material enters into the buckle or you spill a drink, the seat belt may not work properly. In this case, ask an authorized SUZUKI dealer or a qualified workshop for inspection.**
  - **As the seat belt may be damaged, be careful not to get the seat belt caught in the door. Before closing the door, check that the seat belt is retracted without any slack.**
  - **Do not modify or remove the seat belt.**

Seat Belt Guide

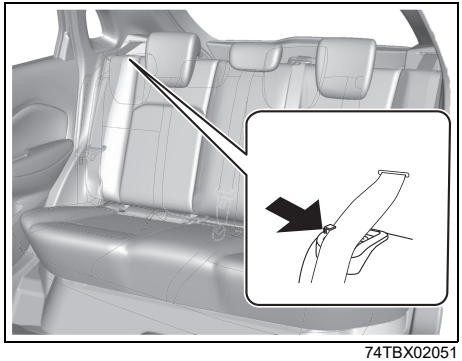

74TBX02051

⚠ WARNING

When you move a seatback, make sure the belt webbing is hooked in the seat belt guides so the seat belts are not caught by the seatback, seat hinge, or seat latch. This helps prevent damage to the belt system.

Seat Belt Care

Caring for seat belts is the same as caring for any type of regular cloth material, etc.

⚠ WARNING

Do not use bleach, solvent or dyes on seat belts. Doing so may cause stains, discoloration and strength deterioration, and the seat belt may not function properly.

Seat Belt Pretensioner System (Only for Front Seat)

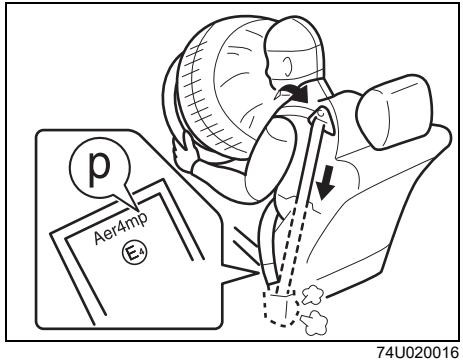

74U020016

⚠ WARNING

This section describes your SUZUKI vehicle's seat belt pretensioner system. Read and follow all these instructions carefully to minimize your risk of severe injury or death.

To determine if your vehicle is equipped with a seat belt pretensioner system at the front or rear seating positions, check the label on the seat belt at the bottom part. If the letter "p" appears as illustrated, your vehicle is equipped with the seat belt pretensioner system. You can use the preten-

sioner seat belts in the same manner as ordinary seat belts.
Read this section and “Supplemental Restraint System (Airbags)” section to learn more about the pretensioner system.

The seat belt pretensioner system works with the supplemental restraint system (airbags). The crash sensors and the electronic controller of the airbag system also control the seat belt pretensioners. The pretensioners are triggered only when there is a frontal or side collision severe enough to trigger the airbags and the seat belts are fastened. For precautions and general information including servicing the pretensioner system, refer to “Supplemental Restraint System (Airbags)” section in addition to this “Seat Belt Pretensioner system” section, and follow all those precautions.
The pretensioner is located in each front seat belt retractor. The pretensioner tightens the seat belt so the belt fits the occupant’s body more snugly in the event of a frontal or side collision. The retractors will remain locked after the pretensioners are activated. Upon activation, some noise will occur and some smoke may be released. These conditions are not harmful and do not indicate a fire in the vehicle.

The driver and all passengers must be properly restrained by fastening seat belts at all times, whether or not a pretensioner is equipped at their seating position, to minimize the risk of severe injury or death in the event of a collision.

Sit fully back in the seat; sit up straight; do not lean forward or sideways. Adjust the belt so the lap portion of the belt is worn low across the pelvis, not across the waist. Please refer to “Seat Adjustment” section and the instructions and precautions about the seat belts in this “Seat Belts and Child Restraint Systems” section for details on proper seat and seat belt adjustments.

Please note that the pretensioners along with the airbags will activate in severe frontal or side collisions. They are not designed to activate in rear impacts, rollovers, or minor frontal side collisions. The pretensioners can be activated only once. If the pretensioners are activated (that is, if the airbags are activated), have the pretensioner system serviced by an authorized SUZUKI dealer or a qualified workshop as soon as possible.

The pretensioner system or the airbag system may not work properly if any of the following conditions occurs:
1) If the air bag warning light on the instrument cluster does not come on briefly, when the ignition switch is turned to the “ON” position or the engine switch is pressed to change the ignition mode to “ON”.
2) If the air bag light comes on and stays on for more than 10 seconds, when the ignition switch is turned to the “ON” position or the engine switch is pressed to change the ignition mode to “ON”.
3) If the air bag light comes on while driving.

Have both systems inspected by an authorized SUZUKI dealer or a qualified workshop as soon as possible.
Service on or around the pretensioner system components or wiring must be performed only by an authorized SUZUKI dealer or a qualified workshop who is specially trained. Improper service could result in unintended activation of pretensioners or could render the pretensioner inoperative. Either of these two conditions may result in personal injury.

To prevent damage or unintended activation of the pretensioners, check that the lead-acid battery is disconnected and the ignition switch has been in “LOCK” position or the ignition mode has been in LOCK (OFF) for at least 90 seconds before performing any electrical service work on your SUZUKI vehicle.

Do not touch pretensioner system components or wiring. The wires are wrapped with yellow tape or yellow tubing, and the couplers are yellow. When scrapping your SUZUKI vehicle, ask an authorized SUZUKI dealer or a qualified workshop, body repair shop, or scrap yard for assistance.

For Proper Operation of Seat Belt Pretensioner System

Do not modify any parts that can affect the functionality of the seat belt pretensioner system. The seat belt may be retracted unexpectedly, or it may not be properly retracted when necessary.

Disposal and Scrapping

Seat belt pretensioners that have not been activated must be activated according to the predetermined procedure before disposal.

⚠ WARNING

If you do not handle a pretensioner properly for disposal, the pretensioner system may activate unexpectedly, resulting in severe injury.
When disposing of a pretensioner or scrapping the vehicle equipped with a pretensioner, consult an authorized SUZUKI dealer or a qualified workshop.

Seat Belt Force Limiter System (Only for Front Seat)

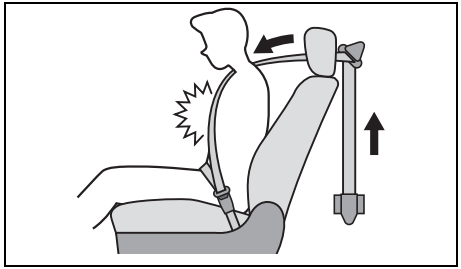

74TBX02053

In the event of a strong impact coming from the front, the seat belt force limiter operates in two stages (driver's seat) and one stage (front passenger's seat) to reduce a force to the shoulder strap, thus lessening the impact being sustained by the front passengers.

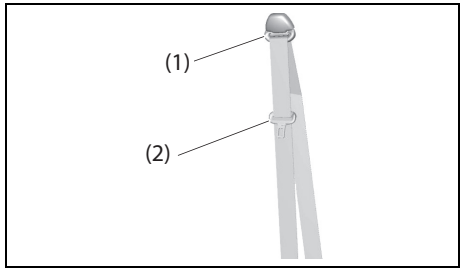

74TBX02054

⚠ WARNING

If the seat belt sustains strong impact, the resin of the shoulder anchor part (1) and the tongue plate part (2) could soften due to heavy friction, thus sticking to the seat belt, making the belt slide less easily. In such a case, the seat belt may not provide the best performance, resulting in severe injury in case of emergency. Have the seat belt replaced by an authorized SUZUKI dealer or a qualified workshop.

Child Restraint Systems

Child Restraint System Usage

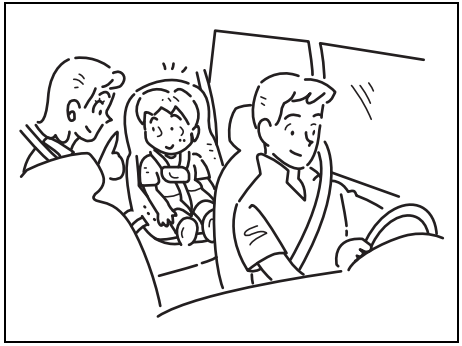

59RN02280

The following types of child restraint system are available generally.

Infant restraint

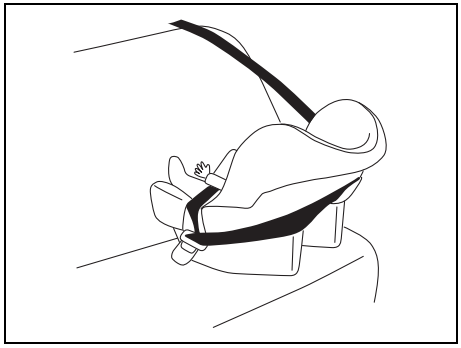

80JC007

Child restraint

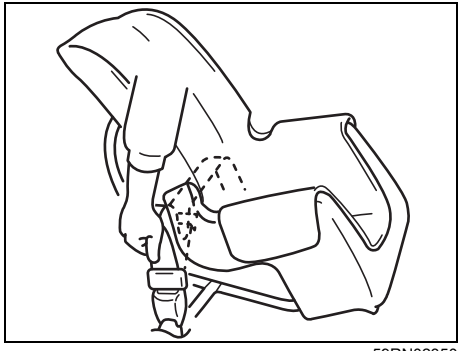

59RN02350

Booster seat

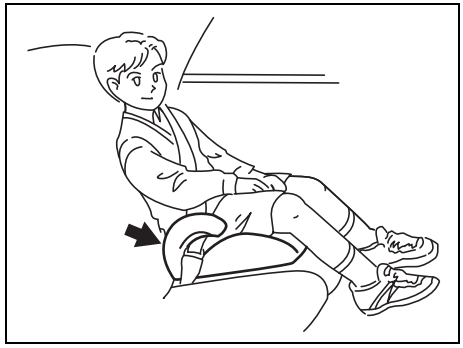

59RN02290

SUZUKI highly recommends that you use a child restraint system to restrain infants and small children. Many different types of child restraint systems are available; check that the restraint system you select meets applicable safety standards.

All child restraint systems are designed to be secured in vehicle seats either by seat belts (lap belts of lap-shoulder belts) or by special rigid lower anchor bars built onto the floor. Whenever possible, SUZUKI recommends that child restraint systems be installed on the rear seat. According to accident statistics, children are safer when properly restrained in rear seating positions than in front seating positions.

(For countries applied for UN Regulation No.16)
when purchasing a child restraint and install it to your SUZUKI vehicle, refer to the information about suitability for child restraints shown in Child restraint system for Countries applied for UN regulation No.16* in this section

NOTE:
Observe any statutory regulation about child restraints.

⚠ WARNING

When installing a child restraint system to the rear seat, touching the child's foot or the child restraint system to the seatback of the front seat can cause serious injury to the child in the event of an accident. Adjust the front seat so that it does not touch the child or the child restraint system.

⚠ WARNING



61M0241

- **Do not install a child restraint system on the front passenger's seat.**

⚠ WARNING

- **If child restraint systems are not installed properly, children or other occupants could be seriously injured in the event of an accident. Secure the child restraint system firmly according to both this manual and the instruction provided by child restraint system's manufacturer.**
- **If the child is not secured properly in the child restraint system, it could cause serious injury to the child in the event of an accident. Use the child restraint system correctly following the instruction provided by child restraint system's manufacturer.**

⚠ WARNING

- **If you recline the seatback, a child restraint system may not be secured properly and a child body may slip beneath the seat belt. This may cause severe injury.**
  Do not recline the seatback when a child restraint system is installed on the seat.
- **If you use the child restraint system which was severely damaged by an accident, etc., it may not provide the best performance. This may cause severe injury to a child. If the child restraint system was severely damaged by an accident, etc., do not reuse the child restraint system even though its appearance looks normal.**

⚠ WARNING

- **If the child is not secured properly in the child restraint system, it could cause serious injury to the child in the event of an accident.Use the child restraint system correctly following the instruction provided by child restraint system's manufacturer**

Selecting an Appropriate Child Restraint System

Please carefully read this part regarding child restraint systems and choose an appropriate seat for the child's age and physical size.

Certification Mark of Child Restraint System to Comply with UN R44 / R129 Standard

The following certification mark is displayed on the child restraint system conforming to the UN R44[*1] / R129[*1] standard.

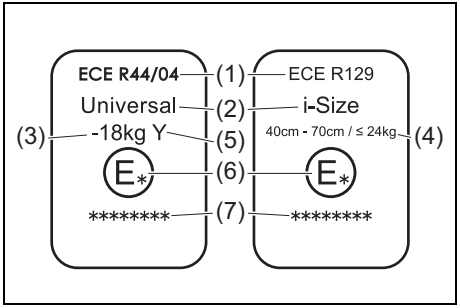

78RB01010

(1) Regulation number[*2]
(2) Child restraint system category[*3]
(3) Weight range of the target child
(4) Height range and weight range of the applicable child who is applicable for this approval mark in the mark
(5) Device specification
(6) Country code that authorized the child restraint system
(7) Authorization number of the child restraint system

*1: UN R44 / R129 means that the international standard pertaining to child restraint systems.
*2: For "ECE" shown in the certification mark of the child restraint system, ECE standards are the same as those for the UN standards.
*3 "Universal" means that the child restraint system is approved for installation in all categories.

NOTE:
SUZUKI genuine child restraint system for this vehicle complies with the UN R44 / R129 *standard.*

How to Understand the Table of Vehicle Handbook Information on Child Restraint Systems Installation Suitability for Various Seating Positions

Mass Groups

- Child restraint systems meeting the UN R44 standard are classified into the following five types.

Mass Group	Child Weight
Group 0	Up to 10 kg
Group 0+	Up to 13 kg
Group I	9-18 kg
Group II	15-25 kg
Group III	22-36 kg

- Typical child restraint systems are specified as follows:

Baby seat

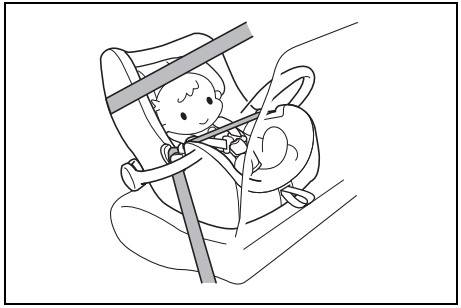

64L30810

A baby seat for rear-facing or sideways-facing use, for babies that cannot yet support their own heads or who cannot sit properly by themselves; this type corresponds to Group 0 and Group 0+ of the UN R44 standard.

Child seat



64L30820

A child seat with a front-facing configuration, used for children for which the shoulder strap of a regular seat belt rests on the neck or chin rather than the shoulder, or the lap portion of the belt cannot yet securely rest on the hipbone; this type corresponds to Group I of the UN R44 standard.

Junior seat



64L30830

A junior seat with a front-facing configuration, used for a child for which the shoulder strap of a regular seat belt rests on the neck or chin rather than the shoulder, or the lap portion of the belt cannot yet securely rest on the hipbone; this type corresponds to Group II and Group III of the UN R44 standard.

Child Restraint Systems Installation Suitability for Each Seat Position

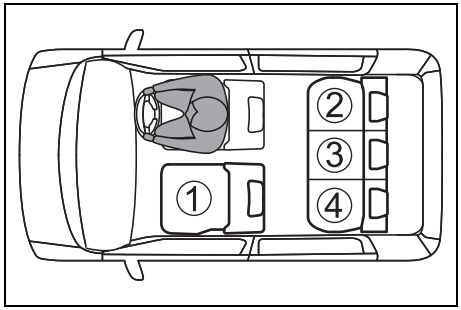

83R02310

NOTE:
The above illustration shows Right handle drive vehicle.
Seat position number of ①, ②, ③ and ④ is same as Right handle drive vehicle for Left handle drive vehicle.
① Front passenger's seat
② Rear seat right side
③ Rear seat center
④ Rear seat left side

①	
② (#1, #2)	
③ (#1, #2)	
④ (#1, #2)	



It is suitable for universal category of child restraint system fixed with the vehicle seat belt.



It is suitable for i-Size and ISOFIX child restraint system.



This seat is equipped with Top tether anchorage point.



Never use a rear-facing child restraint system on the front passenger seat when the front passenger airbag is activated.



It is not suitable for child restraint system.

#1 If the head restraint interferes with the child restraint system, adjust the height of the head restraint or remove it, as necessary.

#2 If there is a gap or space between the child restraint system and the seatback, put cushions, etc. into it in order to install properly.

Detailed information for child restraint system

Seat position number	Seating position			
	①	②	③	④
Seating position suitable for universal belted (YES/NO)	NO	YES	YES	YES
i-Size seating position (YES/NO)	NO	YES	NO	YES
Seating position suitable for lateral fixture (L1/L2)	NO	X	NO	X
Suitable rear-facing fixture (R1/R2/R3/R2X)	NO	R1, R2, R3 (#1)	NO	R1, R2, R3 (#1)
		R2X (#2)		R2X (#2)
Suitable front-facing fixture (F2/F3/F2X)	NO	F2, F3 (#1)	NO	F2, F3 (#1)
		F2X (#2)		F2X (#2)
Suitable booster fixture (B2/B3)	NO	B2, B3	B2, B3	B2, B3

#1 Pull upward the head restraint until it clicks.
#2 Remove the head restraint.

Key of letters to be inserted in the above table
YES =Suitable for this seating position
NO = Not suitable for this seating position
X =ISOFIX position is not suitable for ISOFIX child restraint systems in this fixture.

The child restraint system can be used in the seating positions for fixture shown in the above table.
For child restraint system fixtures, confirm the table of next page.

If your child restraint system has no size class (or if you cannot find information in the following table), refer to the child restraint system suitability information for the vehicle or ask the retailer of your child seat.

ISOFIX child restraint systems are shown as follows;
ISOFIX child restraint systems are divided into different mass group, size class and fixture.

Mass group	Size class	Fixture	Description
0 (up to 10 kg)	F	L1	Left Lateral facing position Child Restraint Systems (carry-cot)
	G	L2	Right Lateral facing position Child Restraint Systems (carry-cot)
	E	R1	Rear-facing seat
0+ (up to 13kg)	E	R1	Rear-facing seat
	D	R2	Reduced-Size rear-facing toddler Child Restraint Systems
	–	R2X	Reduced-Size rear-facing toddler Child Restraint Systems
	C	R3	Full-Size rear-facing toddler Child Restraint Systems
I (9kg to 18kg)	D	R2	Reduced-Size rear-facing toddler Child Restraint Systems
	–	R2X	Reduced-Size rear-facing toddler Child Restraint Systems
	C	R3	Full-Size rear-facing toddler Child Restraint Systems
	B	F2	Reduced-Height front-facing toddler Child Restraint Systems
	B1	F2X	Reduced-Height front-facing toddler Child Restraint Systems
	A	F3	Full-Height front-facing toddler Child Restraint Systems

Mass group	Size class	Fixture	Description
II (15kg to 25kg)	X	X	–
III (22kg to 36kg)	X	X	–

Key of letters to be inserted in the above table
X = There is no fixture for this mass group.

Booster seat fixtures are shown as follows;

Fixture	Description
B2	Booster seat, reduced width 440 mm
B3	Booster seat, full width 520 mm

Installation suitability of SUZUKI recommendation child restraint systems

Body size	Recommendation of Child restraint system (#A)	Seating position			
		①	②	③	④
40–83 cm ≤ 13 kg (Birth–15 months)	BRITAX RÖMER BABY-SAFE 3 i-SIZE	NO	YES (#1)	YES (#1)	YES (#1)
40–83 cm ≤ 13 kg (Birth–15 months)	BRITAX RÖMER BABY-SAFE 3 i-SIZE + VARIO BASE 5Z	NO	YES	NO	YES
76–105 cm ≤ 22 kg (15 months–4 years)	BRITAX RÖMER TRIFIX 2 i-SIZE	NO	YES	NO	YES

Key of letters to be inserted in the above table
YES = It is suitable for this seating position
NO = It is not suitable for this seating position

#1: Only belted.
#A: These child restraint systems are SUZUKI Genuine Accessory which comply with the R129, refer to the genuine accessories catalog.
However, there are cases that some or all of these child restraint systems are not sold because of nonconformity to the law of your country or other reason.

Securing Child Restraint System by Seat Belt

Choose the appropriate seat for the child's age and physical size.

⚠ WARNING



74TBX02060

- **Do not install a child restraint system on the front passenger's seat.**
- **If you install a child restraint system in the rear seat, slide the front seat far enough forward so that the child's feet do not contact the front seatback. This will help avoid injury to the child in the event of an accident.**
- **Do not hold a child on passenger's lap when the vehicle is in motion.**

(Continued)

⚠ WARNING

(Continued)

- **Even if the passenger holds the child tightly, he/she would not be supported enough in the event of an accident and it could result in a serious injury of the child**

⚠ CAUTION

If your vehicle is equipped with the head restraint, adjust the height of the head restraint or remove it for fitting the child restraint, as necessary. However, if a booster cushion not equipped with the head restraint is fitted, the head restraint should not be removed. If the head restraint is removed for fitting the child restraint, you need to install it again after removing the child restraint.
If the child restraint is fitted improperly, a child sitting in it could be injured in a collision.

NOTE:
Stow the removed head restraint in the luggage compartment so it will not cause inconvenience to the occupants.

Securing

This section explains securing the child restraint system in the rear seat.

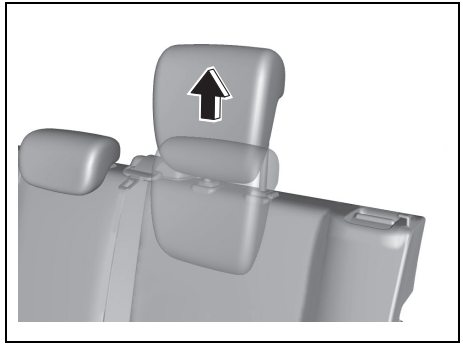

74TBX02061

1) When the child restraint system contacts the head restraint, adjust the height of the head restraint or remove it for fitting the child restraint system.

⚠ WARNING

If the child restraint system contacts the head restraint, the child restraint system cannot be secured firmly. This may cause severe injury to a child in a collision.
When installing the child restraint system, adjust the head restraint height to the highest position as much as possible or remove the head restraint so that the child restraint system would not contact the head restraint.

2) Make sure that the child restraint system is securely fastened to the main seat.
3) Make sure to pass the seat belt of the passenger's seat through the specified parts, according to the instruction manual that came with the child restraint system.

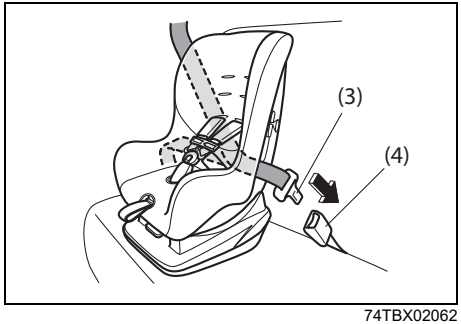

74TBX02062

4) Insert the tongue plate (3) firmly into the seat belt buckle (4) until you hear a click.
   • The child restraint system in the above figure is a typical example.
5) Make sure the child seat is installed properly according to the instructions provided by the child restraint system manufacturer.
   • If the child restraint system is not installed properly, consult the retailer where you purchased the child restraint system.

⚠ WARNING

Make sure to position the child restraint system securely. Failure in doing so could result in the child sustaining serious injury when sudden braking or a collision occurs.

Securing Child Restraint System by ISOFIX

Securing

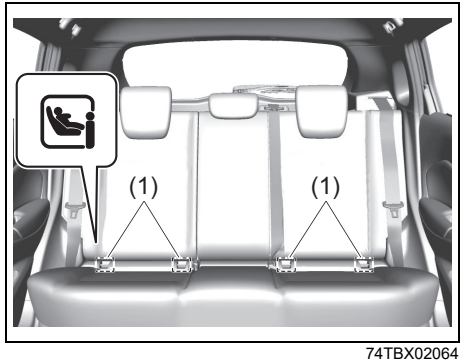

74TBX02064

(1) Lower anchorage

Your vehicle is equipped with the lower anchorages in the rear seat outboard seating positions for securing a ISOFIX type of child restraints with the connecting bars. The lower anchorages are located where the rear of the seat cushion meets the bottom of the seatback.

⚠ WARNING

Install the ISOFIX type of child restraint(s) in the only outboard seating positions, not in the central position for the rear seat.

Install the ISOFIX type child restraint system according to the instructions provided by the child restraint system manufacturer. After installation, try moving the child restraint system in all directions especially forward to check that connecting bars are securely latched to the anchorages.

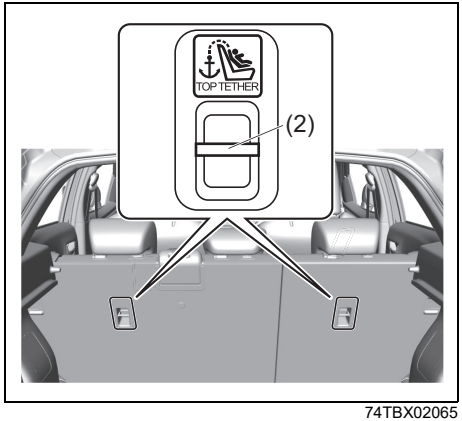

74TBX02065

(2) Top tether anchorage

Your vehicle is equipped with the top tether anchorages. Use the top tether strap of the child restraint according to the instructions provided by the child restraint system manufacturer.

Here is a general instruction:

⚠ CAUTION

If your vehicle is equipped with the head restraint, adjust the height of the rear head restraint or remove it for fitting the child restraint, as necessary. However, if a booster cushion not equipped with the head restraint is fitted, the head restraint should not be removed. If the head restraint is removed for fitting the child restraint, you need to install it again after removing the child restraint.
If the child restraint is fitted improperly, a child sitting in it could be injured in a collision.

NOTE:
Stow the removed head restraint in the luggage compartment so it will not cause inconvenience to the occupants.

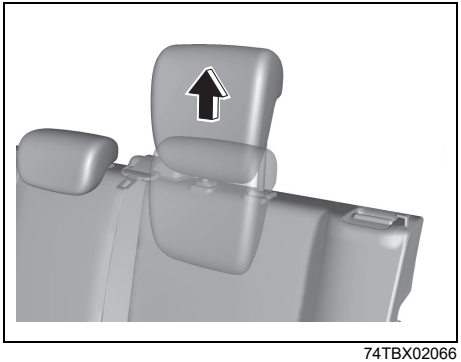

74TBX02066

1) When the child restraint system contacts the head restraint, adjust the height of the head restraint or remove it for fitting the child restraint system.

⚠ WARNING

If the child restraint system contacts the head restraint, the child restraint system cannot be secured firmly. This may cause severe injury to a child in a collision.
When installing the child restraint system, adjust the head restraint height to the highest position as much as possible or remove the head restraint so that the child restraint system would not contact the head restraint.

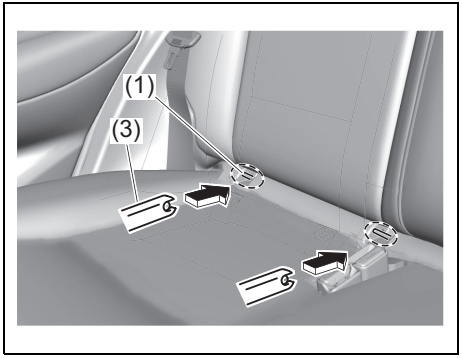

74TBX02067

2) Place the child restraint in the rear seat, inserting the connecting bars (3) to the lower anchorages (1) between the seat cushion and the seatback.

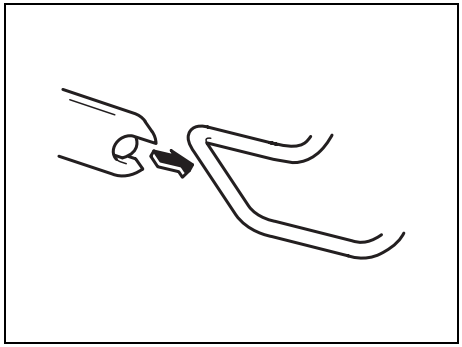

74TBX02068

3) Use your hands to carefully align the connecting bar tips with the anchorages. Take care not to pinch your fingers.

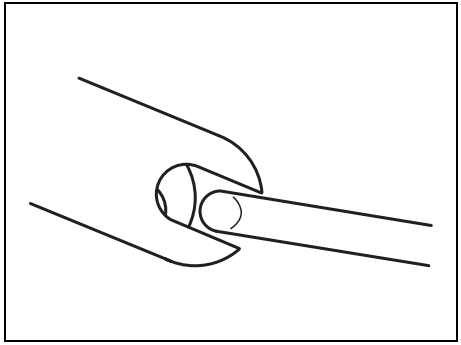

74TBX02069

4) Push the child restraint toward the anchorages so that the connecting bar tips are partially hooked to the anchorages. Use your hands to confirm the position.

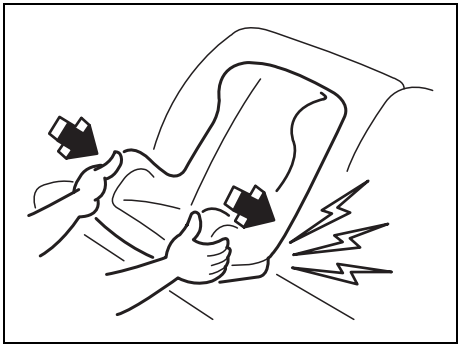

74TBX02070

5) Grasp the front of the child restraint and push the child restraint forcefully to latch the connecting bars. Check that they are securely latched by trying to move the child restraint system in all directions, especially forward.
6) Attach the top tether strap referring to “Installation of child restraint with top tether” section.
   When you put your child in the child restraint system, appropriately slide the front seat forward not to touch a part of your child’s body.

NOTICE

When installing a child restraint system to the rear seat, adjust the front seat position so that the front seat does not interfere with the child restraint system.

Installation of Child Restraint with Top Tether

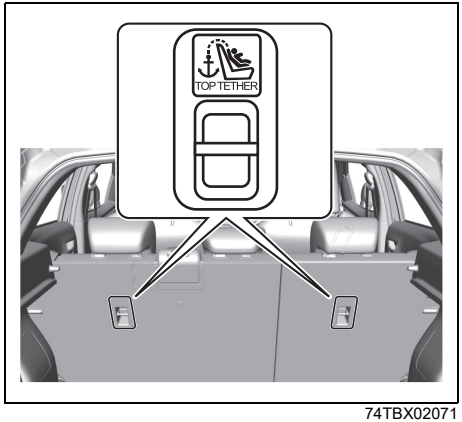

74TBX02071

Some child restraint systems require the use of a top tether strap. Top tether anchorage brackets are provided in your vehicle at the locations shown in the illustrations.
The number of the top tether anchorage brackets provided in your vehicle depends on the vehicle specification. Install the child restraint system as follows:

1) Remove the luggage compartment cover (if equipped).
2) Secure the child restraint on the rear seat using the procedure described above for securing a restraint system that does not require a top tether strap.
3) Hook the top tether strap to the top tether anchorage and tighten the top tether strap according to the instructions provided by the child restraint system manufacturer. Attach the top tether strap to the corresponding top tether anchorage located directly behind the child restraint. Do not attach the top tether strap to the luggage restraint loops (if equipped).

⚠ WARNING

Do not attach the child restraint top tether strap to the luggage restraint loops. Incorrectly attached top tether strap will reduce the intended effectiveness of the child restraint system.

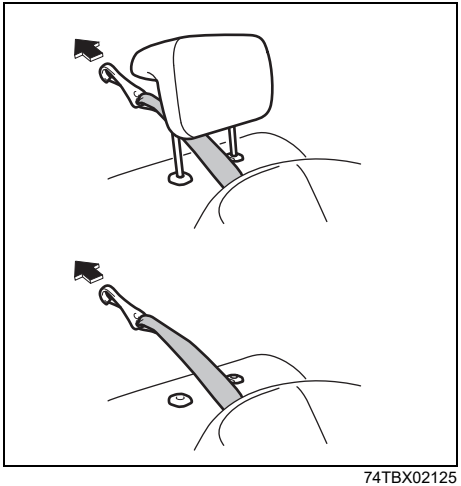

74TBX02125

4) When routing the top tether strap, pass the top tether strap as shown in the illustration. (Refer to “Head Restraints” section for details on how to adjust the height of head restraint or remove it.)
5) Check that cargo does not interfere with routing of the top tether strap.

⚠ WARNING

If the seat belt, etc. gets stuck in the child restraint system, it may not be secured properly and this may cause severe injury to a child in a collision. When you install the child restraint system, check that obstacles and the seat belt do not exist near the ISOFIX anchorages and the top tether anchorages.

Supplemental Restraint System (Airbags)

⚠ WARNING

This section describes the protection provided by your SUZUKI vehicle's supplemental restraint system (airbags). Read and follow all instructions carefully to minimize your risk of severe injury or death in the event of a collision.

Your vehicle is equipped with a supplemental restraint system consisting of the following components in addition to a lap-shoulder belt at each seating position.

(1) Side curtain airbag module
(2) Side crash sensor
(3) Front passenger's front airbag module
(4) Driver's front airbag module
(5) Forward crash sensor
(6) Front seat belt pretensioner
(7) Side airbag module
(8) Airbag controller

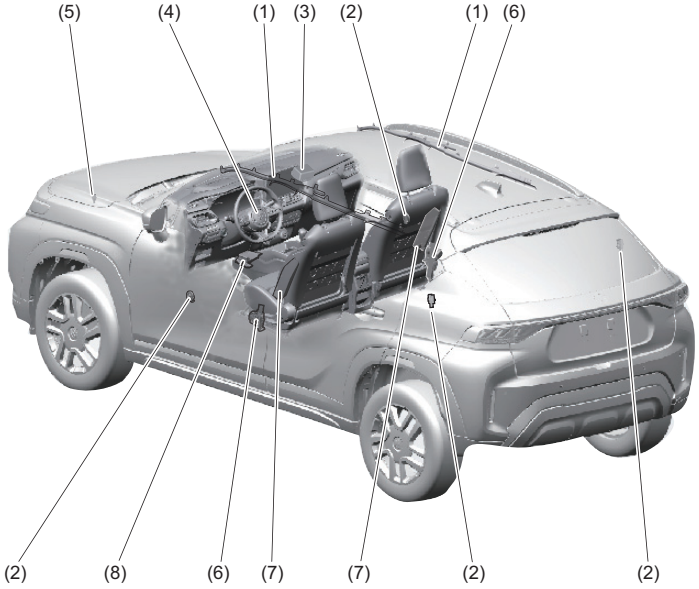

74U020017

What is SRS Airbag System?

SRS stands for “Supplemental Restraint System”. This system aims to restrain passengers in their seats for safety.

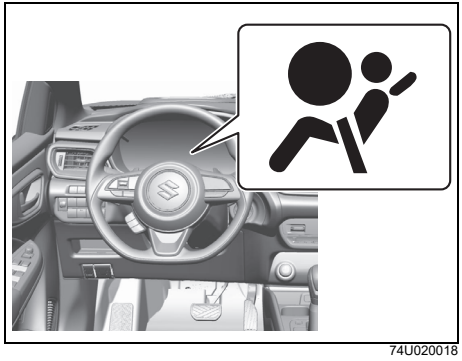

74U020018

If airbag warning light on the instrument cluster does not blink or come on when the ignition switch is first turned to “ON” position, or the ignition mode is first changed to ON, or airbag warning light stays on, or comes on while driving, the airbag system (or the seat belt pretensioner system) may not work properly. Have the airbag system inspected by an authorized SUZUKI dealer or a qualified workshop as soon as possible.

⚠ WARNING

- **SRS airbag system is not a substitute for seat belts. SRS airbag system is the supplemental restraint system and will provide the effectiveness by using the seat belts at the same time.**
  If you and the passengers do not fasten their seat belts, it may result in severe injury in a sudden braking or a collision.
  Even when you drive the vehicle equipped with SRS airbag system, make sure to fasten seat belt.
- **If the seat belts are not fastened properly, airbags may not provide the best performance. This may cause severe injury in a sudden braking and a collision.**
  Make sure that the driver and all the passengers fasten the seat belts properly in a correct posture.

NOTE:
Via the event data recorder (EDR) system, this vehicle records and accumulates data when the airbag is deployed.

Front airbags

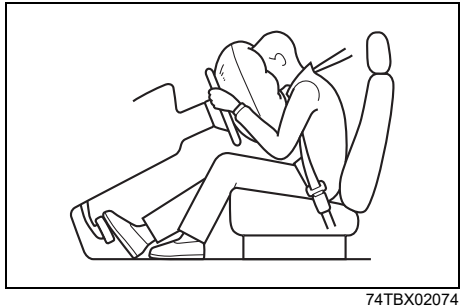

74TBX02074

Front airbags are designed to inflate in severe frontal collisions when the ignition switch is in “ON” position or the ignition mode is ON.

NOTE:
In a frontal angle collision, the side airbags and side curtain airbags may inflate.

Front airbags are not designed to inflate in rear impacts, side impacts, rollovers or minor frontal collisions, since they would offer no protection in those types of accidents. Since an airbag deploys only one time during an accident, seat belts are needed to restrain occupants from further movements during the accident.
Therefore, an airbag is not a substitute for seat belts. To maximize your protection, always fasten your seat belts. Be aware that no system can prevent all possible injuries that may occur in an accident.

Side airbags and side curtain airbags

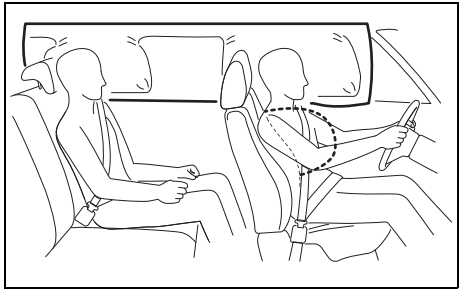

74U020026

Side airbags and side curtain airbags are designed to inflate in severe side impact collisions when the ignition mode is ON.

Side airbags and side curtain airbags are not designed to inflate in frontal or rear collisions, rollovers or minor side collisions, since they would offer no protection in those types of accidents. Only the side airbag and side curtain airbag on the side of the vehicle that is struck will inflate. However, in a frontal angle collision, the side airbags and side curtain airbags may inflate. Since an airbag deploys only one time during an accident, seat belts are needed to restrain occupants from further movements during the accident.
Therefore, an airbag is not a substitute for seat belts. To maximize your protection, always fasten your seat belts. Be aware that no system can prevent all possible injuries that may occur in an accident.

When Driving the Vehicle with SRS Airbag System

Make Sure to Fasten Seat Belt

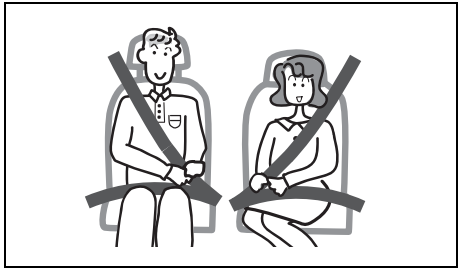

74TBX02076

⚠ WARNING

SRS airbag system is not a substitute for seat belts. SRS airbag system is the supplemental restraint system and will provide the effectiveness by using the seat belts at the same time. If you and the passengers do not fasten their seat belts, it may result in severe injury in a sudden braking or a collision.
Even when you drive the vehicle equipped with SRS airbag system, make sure to fasten seat belt.

Correct Sitting Posture

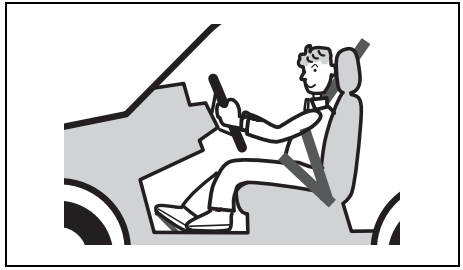

74TBX02077

There is a possibility of major impact from the front airbags when the airbags activate and deploy instantaneously, the driver and the passenger should sit deeply into their seats and touch their backs lightly to the seatback. In addition, the seat should be positioned so that it is not too far forward.

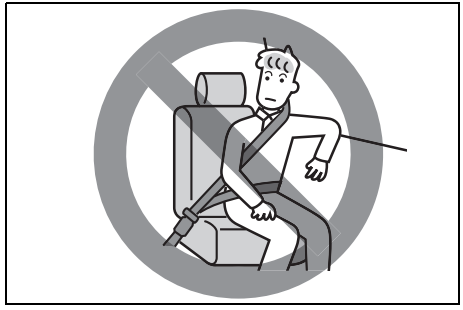

74TBX02078

⚠ WARNING

- **Do not position your face, chest, etc., close to the steering wheel or instrument cluster, and do not rest your feet up into this area. Otherwise, there is the risk of serious injury due to major impact if the airbag were to be deployed.**
- **If side airbags or side curtain airbags activate, you may get strong impact, resulting in severe injury. Do not put hands out of the window or lean on the door. Also, when sitting in the rear seat, do not hug the seatback of the front seat.**

For Proper SRS Airbag System Operation

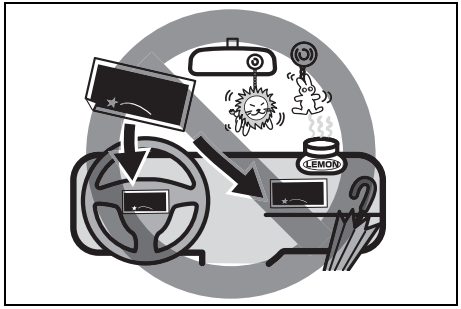

80T020410

⚠ WARNING

- **Do not modify the steering wheel, such as replacing it, placing stickers on it, painting it or putting the cover on it.**
- **Do not place stickers on the airbag units or the surrounding areas or paint them. Also, do not attach any accessories, fragrances, electronic toll control units, portable car navigation systems, etc. to this area, and do not lean umbrellas or other objects against it.**
- **Do not attach accessories (except for SUZUKI genuine products), etc., to the windshield or the inside rearview mirror.**

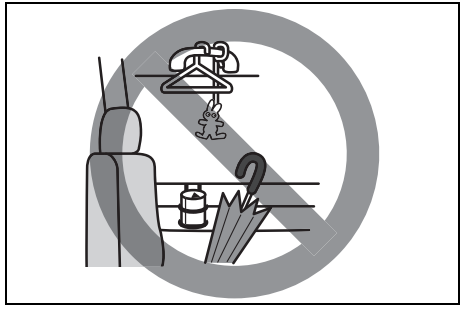

74TBX02080

⚠ WARNING

For the vehicle with side airbags or side curtain airbags, do not attach accessories such as cup holders or hangers near the door. Also, do not lean umbrellas against the door.

Warning Label of SRS Airbag for Front Passenger's Seat



74TB01001

You may find this label on the sun visor.

⚠ WARNING

NEVER use a rearward facing child restraint on a seat protected by an ACTIVE AIRBAG in front of it, DEATH or SERIOUS INJURY to the CHILD can occur.

Description of warning label

Symbol	Symbol meaning
	Do not install a rear-facing child restraint system to the front passenger's seat equipped with an airbag.
	If the front passenger's seat airbag were to be deployed, a major impact could be applied to a rear-facing child restraint system and the child.
	For more details, read this owner's manual.

"SRS AIRBAG" Mark and Location

Driver's front airbag

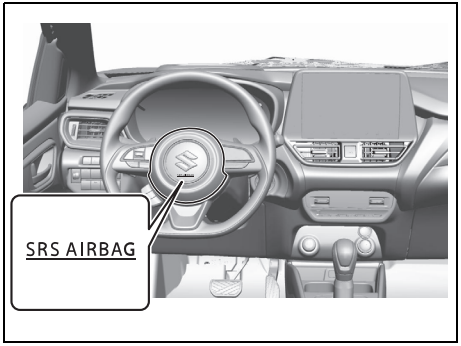

74U020019

Front passenger's front airbag

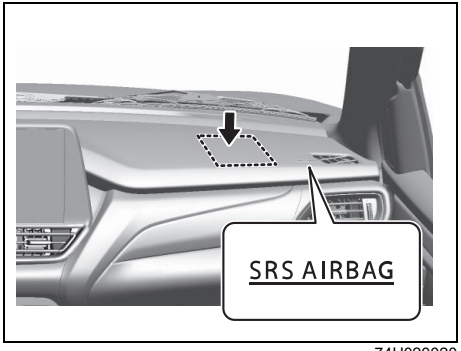

74U020020

Side curtain airbags

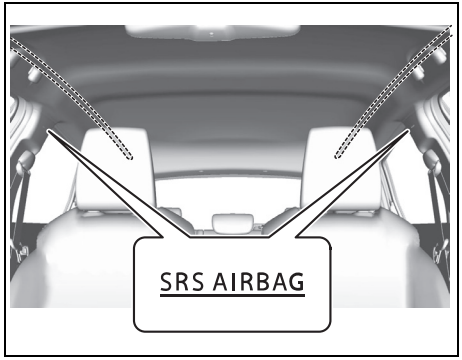

74TBX02084

The driver's front airbag is located behind the center pad of the steering wheel and the front passenger's front airbag is located behind the passenger's side of the dashboard.
Side curtain airbags are located in the roof lining.
The words "SRS AIRBAG" are molded into the airbag covers to identify the location of the airbags.

Side airbags



74U020021

Side airbags are located in the part of the front seatbacks closest to the doors.
The "SRS AIRBAG" labels are attached to the seatbacks to identify the location of the side airbags.

⚠ WARNING

- **If the airbag stored place is damaged or cracked, the airbag system may not work properly, which could result in serious injury in the event of a collision. Have your vehicle inspected by an authorized SUZUKI dealer or a qualified workshop.**
- **If you smash the airbag stored place or apply a strong impact to it, the airbag may not work properly or may inflate unexpectedly, resulting in serious injury.**
  Do not smash the airbag stored place or apply a strong impact to it.

Installation of Child Restraint System

⚠ WARNING



74TBX02085

Do not install a child restraint system on the front passenger's seat.

Refer to "Seat Belts and Child Restraint Systems" section for details on securing your child.

Handling for Airbags

For Proper SRS Airbag System Operation

If objects are positioned within the range where the airbag deploys, such objects might be impacted and blown off or the airbag may not deploy properly.

⚠ WARNING

- **As the airbag may not provide the best performance and it may result in severe injury in case of emergency, observe the following points.**
  - **– Do not modify the suspension. If the vehicle height or the stiffness of the suspension were to change, airbag malfunction may result.**
  - **– When installing a grille guard, etc., on the front of the vehicle, consult an authorized SUZUKI dealer or a qualified workshop. If you modify the front part of the vehicle, the airbag system may not work properly.**
  - **– When installing radio equipment, etc., consult an authorized SUZUKI dealer or a qualified workshop. Radio waves, etc., from a radio may adversely affect the computer module used in the airbag system.**

(Continued)

⚠ WARNING

(Continued)

- **– Even though your vehicle is damaged by a collision, it may not be severe enough to trigger front, side or side curtain airbags to inflate. If your vehicle sustains any front-end or side damage, have the airbag system inspected by an authorized SUZUKI dealer or a qualified workshop to ensure that it works properly. If the original function of airbag system is damaged, airbag may not function effectively and fully in case of an emergency.**

- **If the airbag-related parts are replaced or repaired, which has an impact on the airbag functions, the airbag may activate unnecessarily or may not activate when necessary.**
  The following situations may give a negative impact to the airbag system. In these cases, consult an authorized SUZUKI dealer or a qualified workshop beforehand.
  - **– Removing the steering wheel, repairing the areas around the steering wheel, etc.**

(Continued)

⚠ WARNING

(Continued)

- **– Center console repair, repairs around the instrument cluster, repairs under the front seat, and repairs of electrical wiring**
- **– Installation of audio equipment, etc.**
- **– Sheet metal painting and repairs around the dashboard**
- **– Replacement of the front seat and repairs around the seat**
- **– Repairs around the front pillar, the back pillar or the roof side**
- **– Repairs around the center pillar**

Driver's front airbag precautions

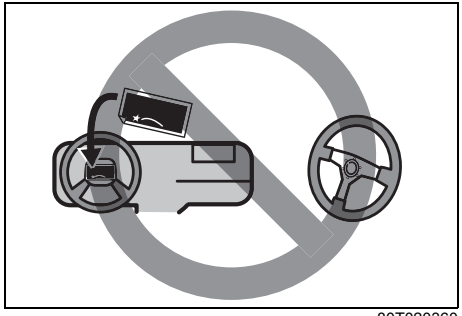

80T020360

⚠ WARNING

- **Do not position your hands, face, chest, etc., close to airbag unit area or lean on the steering wheel. Otherwise, there is the risk of serious injury due to major impact if the airbag were to be deployed.**
- **Do not modify the steering wheel, such as replacing it, placing stickers on it, painting it or putting the cover on it. Otherwise, the airbag may not deploy normally in case of emergency, resulting in severe injury.**

Front passenger's front airbag precautions

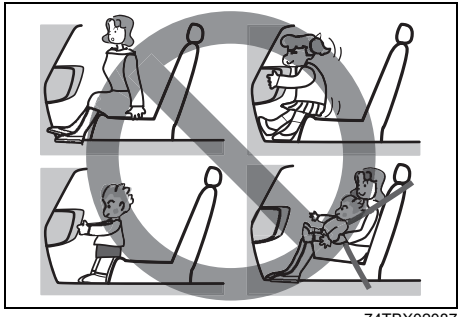

74TBX02087

⚠ WARNING

- **When riding in the front passenger's seat or when allowing a child to ride in this seat, be sure to observe the following points. Failure to do so may result in serious injury due to major impact if the airbag is deployed.**
  - **– Do not position your hands or feet on the airbag unit area, and do not position your face, chest, etc., close to this area.**
  - **– Do not allow a child to stand in front of the airbag unit area or sit on a passenger's lap in the front passenger's seat. Have a child ride in the rear seat wearing a seat belt.**

(Continued)

⚠ WARNING

(Continued)

- **– For a child that is not yet big enough to wear a seat belt properly, be sure to use a child restraint system on the rear seat.**

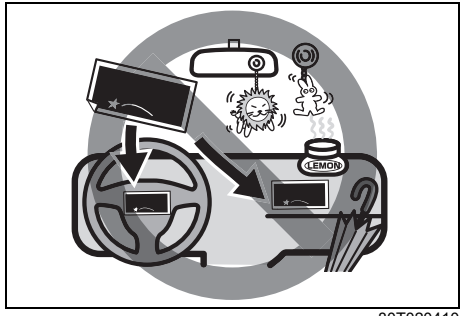

80T020410

⚠ WARNING

- **As the airbag may not provide the best performance and it may result in severe injury in case of emergency, observe the following points.**
  - **– Do not place stickers on the airbag units or the surrounding areas or paint them. Also, do not attach any accessories, fragrances, electronic toll control units, portable car navigation systems, etc. to this area, and do not lean umbrellas or other objects against it.**
  - **– Do not attach accessories (except for SUZUKI genuine products), etc., to the windshield or the inside rearview mirror.**

Side airbags and side curtain airbags precautions

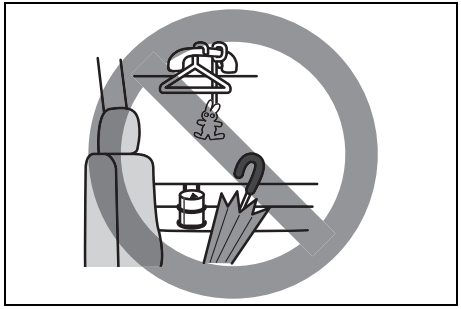

74TBX02089

⚠ WARNING

If you attach accessories such as cup holders or hangers near the door, or if you lean umbrellas against the door, when side airbags or side curtain airbags activate, these objects may be thrown out and may not inflate properly, resulting in severe injury.
Do not attach accessories such as cup holders or hangers near the door. Also, do not lean umbrellas against the door.

Function of Airbags

How the System Works

In a frontal collision, the collision sensors will detect rapid deceleration, and if the controller judges that the deceleration represents a severe frontal collision, the controller will trigger the inflators. The inflators inflate the appropriate airbags with nitrogen or argon gas. The inflated airbags provide a cushion for your head and upper body. The airbag inflates and deflates so quickly that you may not even realize that it has activated. The airbag will neither hinder your view nor make it harder to exit the vehicle.
A seat belt helps keep you in the proper position for maximum protection when an airbag inflates. Adjust your seat as far back as possible while still maintaining control of the vehicle. Sit fully back in your seat; sit up straight; do not lean over the steering wheel or dashboard. Front occupants should not lean on or sleep against the door. Refer to “Seat Adjustment” section and “Seat Belts and Child Restraint Systems” section in this section for details on proper seat and seat belt adjustments.

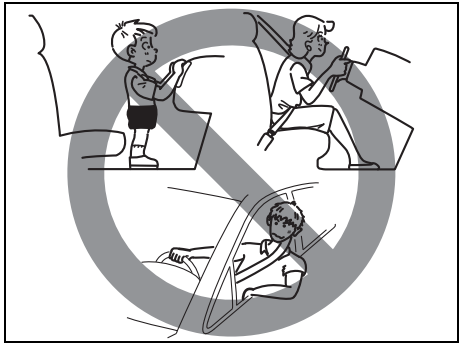

69T020300

⚠ WARNING

- **The driver should not lean over the steering wheel. The front passenger should not rest his or her body against the dashboard where a front air bag is mounted or a child should not stand in front of the dashboard. Otherwise, he or she will get too close to the dashboard. For vehicles with side air bags and side curtain air bag, occupants should not lean on or sleep against the door. In these situations, the out-of-position occupant would be too close to an inflating airbag, and may suffer severe injury.**

(Continued)

⚠ WARNING

(Continued)

- **Do not attach any objects to, or place any objects over, the steering wheel or dashboard. Do not place any objects between the airbag and the driver or front passenger. These objects may interfere with airbag operation or may be propelled by the airbag in the event of a collision. Also, these objects may move when you start moving vehicle or while vehicle is moving, they may interfere with driver's view or safe driving. In each condition, it may cause severe injury.**
- **For vehicles with side airbags, do not use non-genuine seat covers on the front seats, because non-genuine seat covers may obstruct the inflation of side airbags. SUZUKI highly recommends SUZUKI-genuine seat covers to be used when covering the front seats of such vehicles with side airbags. Also, near the door, do not place cup holders, hangers or any other objects and do not lean an umbrella, as these objects could be propelled by the airbag in the event of a collision. Either of these conditions may cause severe injury.**

(Continued)

⚠ WARNING

(Continued)

- **Do not strike or apply significant levels of impact to the airbag component areas. It can cause the airbags to malfunction.**
- **Even though your vehicle is damaged by a collision, it may not be severe enough to trigger front, side or side curtain airbags to inflate. If your vehicle sustains any front-end or side damage, have the airbag system inspected by an authorized SUZUKI dealer or a qualified workshop to ensure that it works properly. If the original function of air bag system is damaged, air bag may not function effectively and fully in case of an emergency.**

⚠ CAUTION

Airbags must inflate quickly and forcefully in order to reduce the chance of serious or fatal injuries. However, an unavoidable consequence of the quick inflation is that the airbag may irritate bare skin, such as the facial area against a front airbag. Wash off any residue as soon as possible to prevent skin irritation. Also, upon inflation, a loud noise will occur and some powder and smoke will be released. These conditions are not harmful and do not indicate a fire in the vehicle. Be aware, however, that some airbag components may be hot for a while after inflation.
This may cause burn injury.

Your vehicle is equipped with a diagnostic module which records information about the airbag system if the airbags deploy in a collision. The module records information about overall system status, and which sensors activated the deployment.

Servicing the airbag system

If the airbags inflate, have the airbags and related components replaced by an authorized SUZUKI dealer or a qualified workshop as soon as possible.
If your vehicle ever gets in deep water and the driver's floor is submerged, the airbag controller could be damaged. If this happens, ask an authorized SUZUKI dealer or a qualified workshop to check the airbag system as soon as possible.
Special procedures are required for servicing or replacing an airbag. For that reason, only an authorized SUZUKI dealer or a qualified workshop should be allowed to service or replace your airbags. Remind anyone who services your SUZUKI vehicle that it has airbags.
Service on or around airbag components or wiring must be performed only by an authorized SUZUKI dealer or a qualified workshop. Improper service could result in unintended airbag deployment or could render the airbag inoperative. Either of these two conditions may result in severe injury.
To prevent damage or unintended inflation of the airbag system, check that the battery is disconnected and the ignition switch has been in "LOCK" position or the ignition mode has been in LOCK (OFF) for at least 90 seconds before performing any electrical service work on your SUZUKI vehicle. Do not touch airbag system components or wires. The wires are wrapped with yellow tape or yellow tubing, and the couplers are yellow for easy identification.

⚠ CAUTION

If you do not handle the airbags properly, they may inflate unexpectedly, resulting in personal injury.
When scrapping the airbags or the vehicle that has the airbags, consult an authorized SUZUKI dealer or a qualified workshop.

Front Airbag Deployment Conditions

Front airbags deploy (inflation)

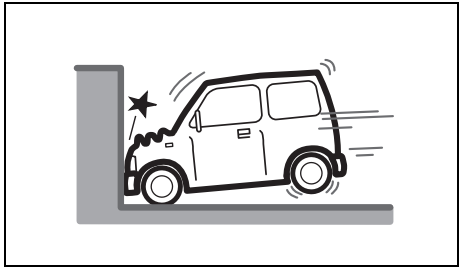

74TBX02093

- Frontal collision with a fixed wall that does not move or deform at more than about 25 km/h (15 mph)

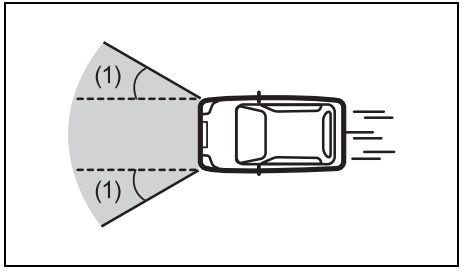

74TBX02094

- Strong impact equivalent to frontal collision such as above at left and right angles of about 30 degrees (1) or less from the front of your vehicle

Front airbags may inflate

Receiving a strong impact to the lower body of your vehicle, the front airbags may inflate.

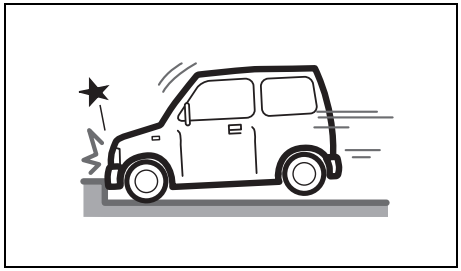

74TBX02095

- Hitting a curb or medial strip

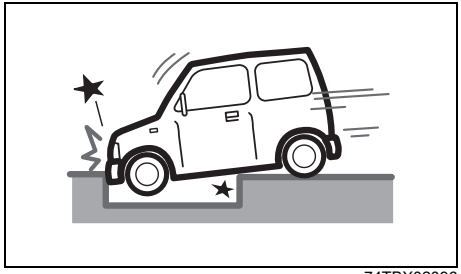

74TBX02096

- Falling into a deep hole or ditch

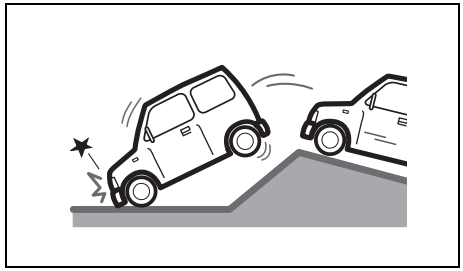

74TBX02097

- Landing hard or falling

Front airbags may not inflate

The front airbags may not inflate when a strong impact has not occurred since the collision object (including living beings like animals) was easy to be deformed or moved, or the crashed portion of your vehicle was easy to be deformed.
Also, front airbags may not inflate in many cases when the collision angle is greater than about 30 degrees at left and right angles from the front of your vehicle. Also, in certain collisions at low speed, the airbag may not inflate.

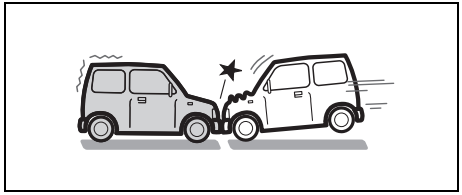

74TBX02098

- Frontal collision to a stopped vehicle at less than about 50 km/h (30 mph)

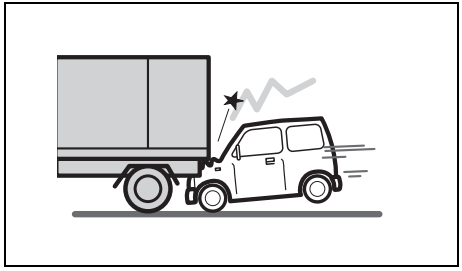

74TBX02099

- Collision that the front of your vehicle goes under the bed of a truck etc.

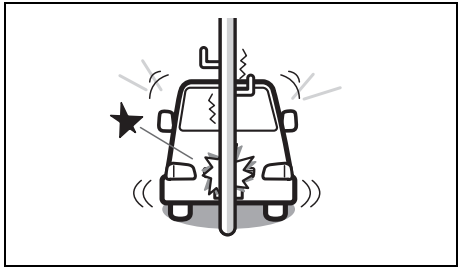

74TBX02100

- Collision with a utility pole or stumpage

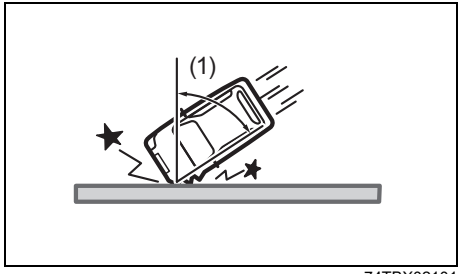

74TBX02101

- Collision with a fixed wall or guardrail at left and right angles of greater than about 30 degrees (1) from the front of your vehicle

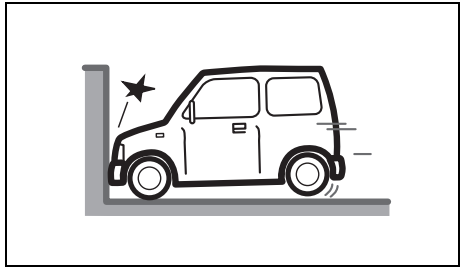

74TBX02102

- Frontal collision with a fixed wall that does not move or deform at less than about 25 km/h (15 mph)

Front airbags do not inflate

Front airbags do not inflate in rear impacts, side impacts or rollovers, etc. However, these might inflate in a strong impact.

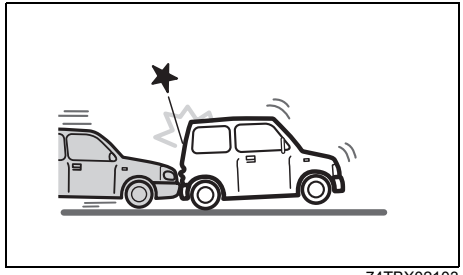

74TBX02103

- Impact from the rear

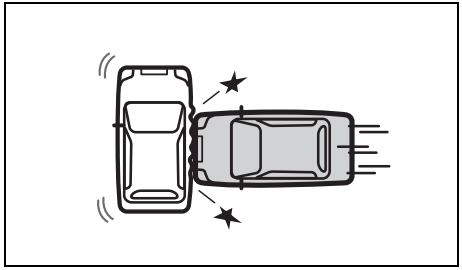

74TBX02104

- Impact from the side

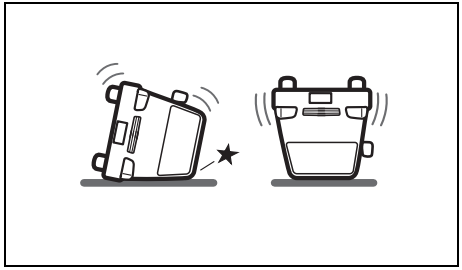

74TBX02105

- Vehicle rollover

Side Airbags and Side Curtain Airbags Deployment Conditions

Side airbags and side curtain airbags deploy (inflation)

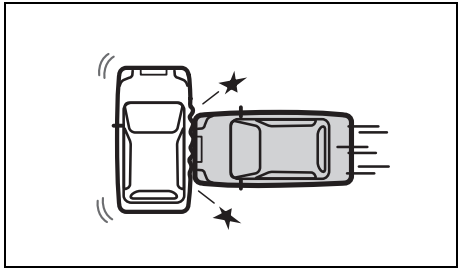

74TBX02106

- Impacts from the side at about a right angle by a general passenger car to your vehicle at more than about 30 km/h (19 mph) or in a greater impact

Side airbags and side curtain airbags may inflate in a strong impact

Side airbags and side curtain airbags may inflate even in a frontal collision, if there is a strong impact to the lateral direction.

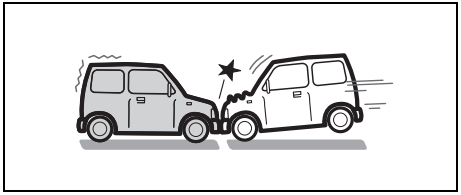

74TBX02107

- Frontal collision

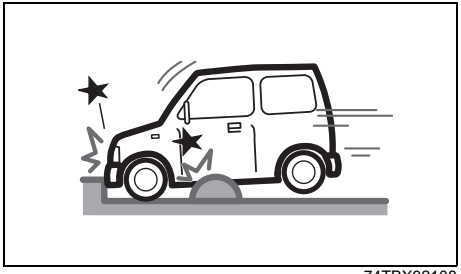

74TBX02108

- Hitting a curb or bump

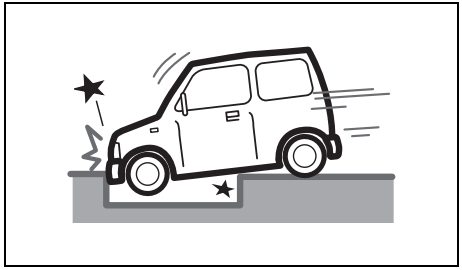

74TBX02109

- Falling into a deep hole or ditch

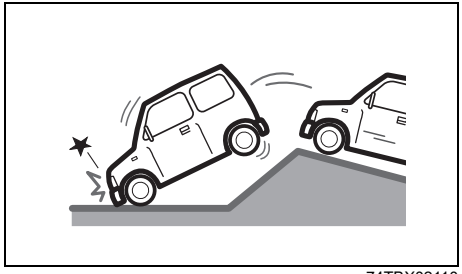

74TBX02110

- Landing hard or falling

Side airbags and side curtain airbags may not inflate

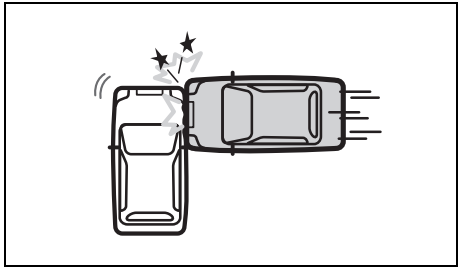

74TBX02111

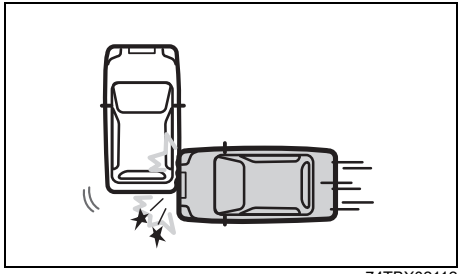

74TBX02112

- Impact from the side to the vehicle body other than the passenger compartment

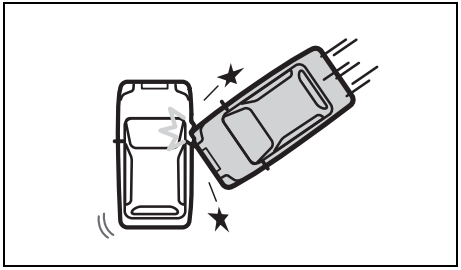

74TBX02113

- Impact from the side at an oblique angle

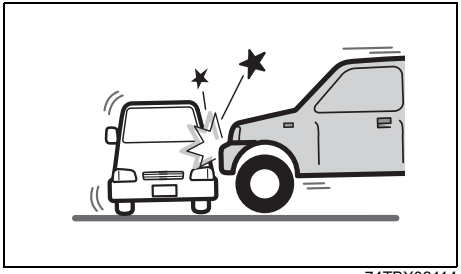

74TBX02114

- Impact from the side by a high hood vehicle

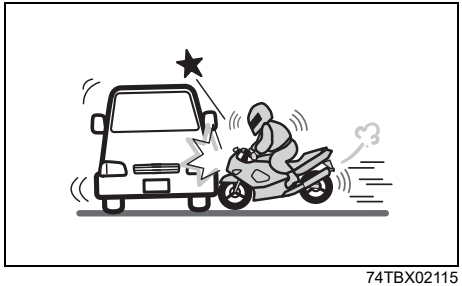

74TBX02115

- Impact from the side by a motorcycle or bicycle

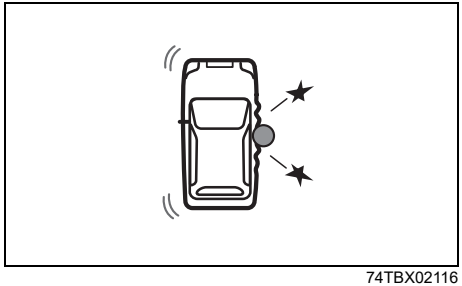

74TBX02116

- Collision with a utility pole or stumpage

Side airbags and side curtain airbags do not inflate

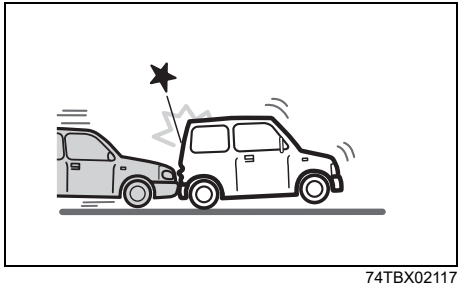

74TBX02117

- Impact from the rear

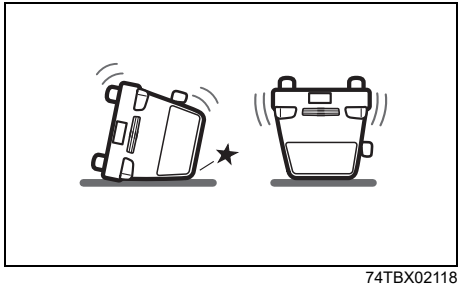

74TBX02118

- Vehicle rollover

When Starting the Engine

Be Careful of Carbon Monoxide Poisoning

⚠ WARNING

Exhaust gases contain carbon monoxide, a potentially lethal gas that is colorless and odorless. If you breath exhaust gases, you may feel drowsy, resulting in severe health problems or death in the worst case.
If you start the engine, be careful of carbon monoxide poisoning.

Do not Run Engine in a Poorly-ventilated Area

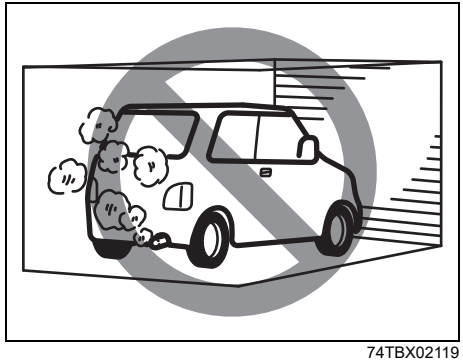

74TBX02119

⚠ WARNING

Avoid breathing exhaust gases. Exhaust gases contain carbon monoxide, a potentially lethal gas that is colorless and odorless. Since carbon monoxide is difficult to detect by itself, take the following precautions to help prevent carbon monoxide from entering your vehicle.
Otherwise, it may result in severe health problems or death in the worst case.

- **Do not leave the engine running in garages or confined areas, with passengers inside. This may result in accumulation of carbon monoxide in cabin and may lead to suffocation or breathing problem and lead to death.**
- **Do not park with the engine running for a long period of time, even in an open area. In case of long periods, danger of choking and death on being inside the vehicle is a possibility when the engine is running. If it is necessary to sit for a short time in a parked vehicle with the engine running, check that the air intake selector is set to "FRESH AIR" and the blower is at high speed.**

(Continued)

⚠ WARNING

(Continued)

- **Avoid operating the vehicle with the tailgate or trunk open. If it is necessary to do so, check that the all windows are closed, and the blower is at high speed with the air intake selector set to "FRESH AIR".**
- **To allow proper operation of your vehicle's ventilation system, keep the air inlet grill in front of the windshield clear of snow, leaves or other obstructions at all times.**
- **Keep the exhaust tailpipe area clear of snow and other material to help reduce the buildup of exhaust gases under the vehicle. This is particularly important when parked in blizzard conditions.**
- **Have the exhaust system inspected periodically for damage and leakage. Any damage or leakage should be repaired immediately.**

Do not Take a Nap with Engine Running

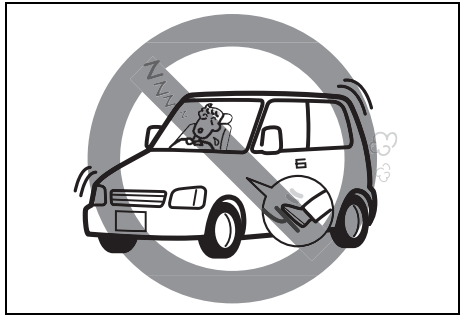

74TBX02120

⚠ WARNING

Do not take a nap with the engine running. Otherwise, it may result in an accident, severe health problems or death in the worst case.

- **Exhaust gases can enter the vehicle due to surrounding conditions and wind direction, possibly causing carbon monoxide poisoning.**
- **The gearshift lever could change unintentionally, or the accelerator pedal could be depressed accidentally, causing an accident.**
- **If you were to accidentally step on the accelerator pedal while asleep, the engine and exhaust system could overheat, resulting in danger of fire**

When Loading the Luggage

Loading too much luggage in the vehicle may have negative effects to the vehicle body or driving performance.

⚠ WARNING



74TBX02121

- **Fuel, chemical containers, spray cans etc. may catch a fire or cause an explosion.**
  Do not bring these objects into the vehicle.

(Continued)

⚠ WARNING

(Continued)



80T020390

- **If you place any objects on the instrument panel, these objects may move and interfere with driver's view or safe driving. Also, the front passenger's front airbag may not work properly or these objects may be thrown out when the airbag inflates in an accident. Do not place any objects on the instrument panel.**



74TBX02123

⚠ CAUTION

- **If you hang any objects on the gearshift lever or use it as a handrest, the gearshift lever may not work properly, resulting in a malfunction or an accident.**
  Do not hang any objects on the gearshift lever or use it as a handrest.
- **If you pile up luggage, it may interfere with driver's view. Also, in a sudden braking, the luggage would jump out and it may result in an accident.**
  Do not pile up luggage in the vehicle.
- **If animals move about in the vehicle, it may interfere with driver's view. Also, in a sudden braking, it may result in an accident.**
  When you bring animals into the vehicle, make sure that animals do not move about.

MEMO

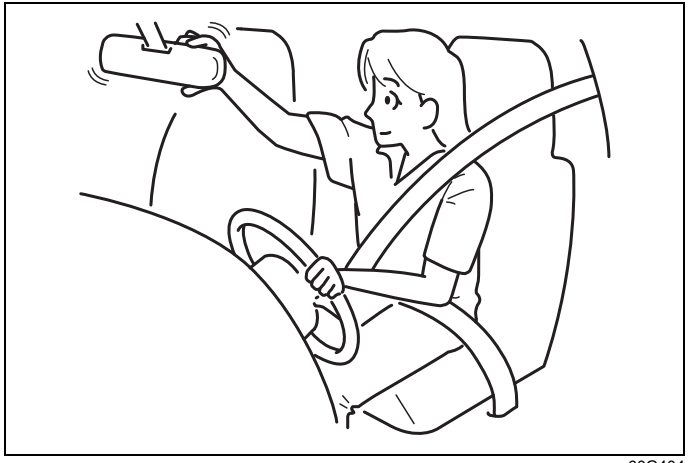

60G404

BEFORE DRIVING

Keys 3-1
Doors 3-1
Keyless Entry System Transmitter /
Keyless Push Start System Remote Controller 3-6
Security System 3-16
Windows 3-18
Headlight Leveling Switch 3-20
Lighting Control Lever 3-22
Turn Signal Control Lever 3-29
Hazard Warning Switch 3-30
Windshield Wiper and Washer Lever 3-30
Horn 3-33
Heated Rear Window Switch 3-34

Keys

Your vehicle comes with a pair of identical keys. Keep one of the keys as a spare key in a safe place. One key can open all of the locks on the vehicle.

Key Number Plate

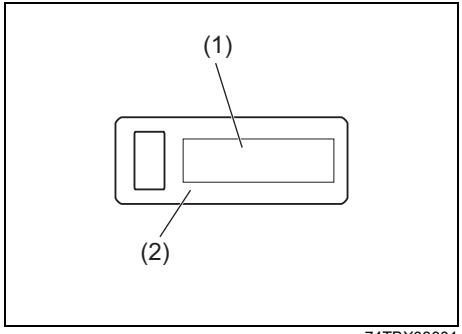

74TBX03001

The key identification number (1) is stamped on a metal tag (2) provided with the keys. Keep the tag in a safe place. If you lose your keys, you will need this number to have new keys made. Write the number below for your future reference.

KEY NUMBER:

NOTE:

- *Carefully keep the tag in the place other than your vehicle, so that someone does not find out about the key identification number. If you lose your key, inform the key identification number of an authorized SUZUKI dealer or a qualified workshop.*
- *When you resell or transfer your vehicle to a new owner or operator, give the key number plate with your vehicle to him or her.*

Immobilizer System

For detail of immobilizer system, “Immobilizer System” in the “OPERATING YOUR VEHICLE” section

Doors

⚠ WARNING

- **When a seat belt or luggage is caught by a door, the door cannot be shut properly and it may open while driving. This may cause an accident. Close a door not to catch a seat belt or luggage in the door.**
- **When you keep the tailgate open with the engine running, exhaust gases will enter the vehicle and cause carbon monoxide poisoning. This may cause severe health problems or death in the worst case. Do not keep the tailgate open with the engine running.**
- **To prevent fire or theft, stop the engine and lock the doors when leaving the vehicle.**
- **When opening a door, be careful of the surrounding area. An accident, such as a collision with the vehicle or a pedestrian behind your vehicle, may occur. Be very careful when opening a door especially on a windy day.**
- **When a child opens or closes a door, his / her hands, legs or head may be caught in the door and this may cause injury. Opening or closing a door should be performed not by a child but by an adult.**

⚠ CAUTION

- **When the tailgate is not fully opened, it may be unexpectedly closed and this may cause injury. When opening the tailgate, open it fully.**
- **Opening the tailgate right behind the exhaust pipes may cause burn injury. With the engine running, do not open the tailgate right behind the exhaust pipes.**

NOTE:

- *When leaving the vehicle even for a short period of time, do not leave cash or valuables in the vehicle, to avoid risk of theft.*
- *Depending on the setting conditions of the security alarm and the opening conditions of the doors, an alarm may operate. Refer to "Security System" in this section.*

Side Door Locks

Left hand vehicle

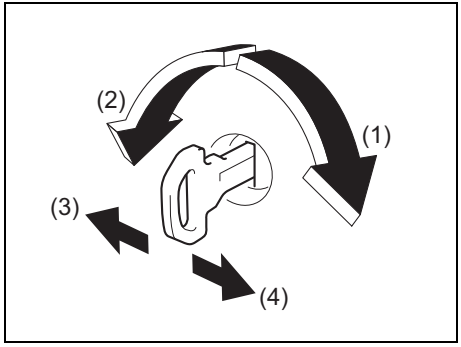

74U030032

Right hand vehicle

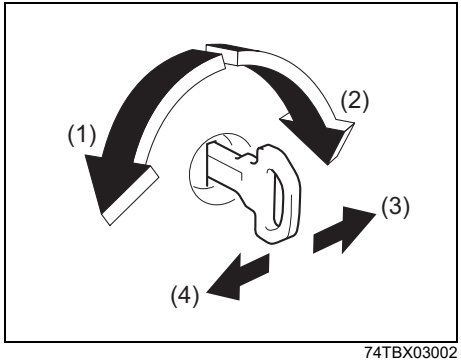

74TBX03002

(1) UNLOCK
(2) LOCK
(3) Front
(4) Rear

To lock a front door from outside the vehicle:

- Insert the key and turn the top of the key toward the front of the vehicle, or
- Turn the lock knob forward, then pull and hold the door handle as you close the door.

To unlock a front door from outside the vehicle, insert the key and turn the top of the key toward the rear of the vehicle.

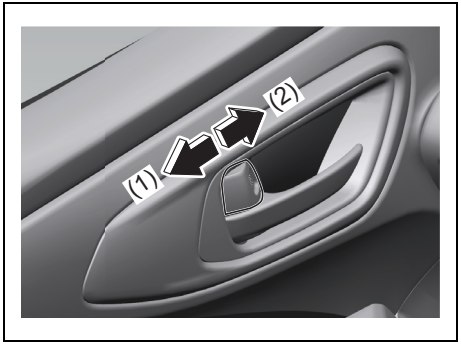

74U030012

(1) UNLOCK
(2) LOCK

To lock a door from inside the vehicle, turn the lock knob forward. Turn the lock knob rearward to unlock the door.

To lock a rear door from outside the vehicle, turn the lock knob forward and close the door. You do not need to pull and hold the door handle as you close the door.

NOTE:
Be sure to hold the door handle when you close a locked front door, or the door will not remain locked.

Central Door Locking System

Left hand vehicle

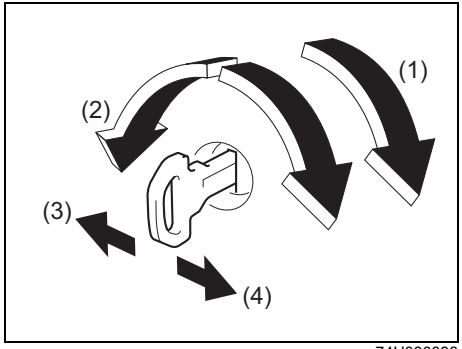

74U030033

Right hand vehicle

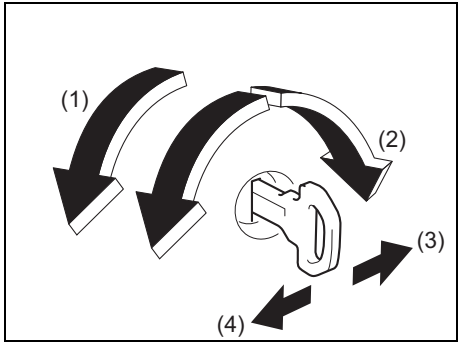

74TBX03004

(1) UNLOCK
(2) LOCK
(3) Front
(4) Rear

You can lock and unlock all doors (including the tailgate) simultaneously by using the key in the driver's door lock.

To lock all doors simultaneously, insert the key in the driver's door lock and turn the top of the key toward the front of the vehicle.

To unlock all doors simultaneously, insert the key in the driver's door lock and turn the top of the key toward the rear of the vehicle twice.

NOTE:
You can switch the function that unlocks all doors from requiring two turns to requiring one turn, and vice versa, via the information display setting mode. For details on how to use the information display, refer to "Information Display" in "INSTRUMENT CLUSTER" section.

To unlock the driver's door only, insert the key in that door lock and turn the top of the key toward the rear of the vehicle once.

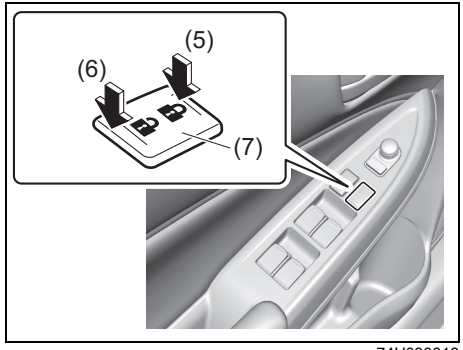

74U030013

(5) LOCK
(6) UNLOCK
(7) Door lock switch

You can also lock or unlock all doors by pressing the front or rear of the switch, respectively.

NOTE:
- *You can also lock or unlock all doors by operating the transmitter or remote controller. Refer to "Keyless Entry System Transmitter / Keyless Push Start System Remote Controller" in this section.*
- *If your vehicle is equipped with the keyless push start system, you can also lock or unlock all doors by pushing the request switch. Refer to "Keyless Entry System Transmitter / Keyless Push Start System Remote Controller" in this section.*

Child-proof Locks (Rear Door)

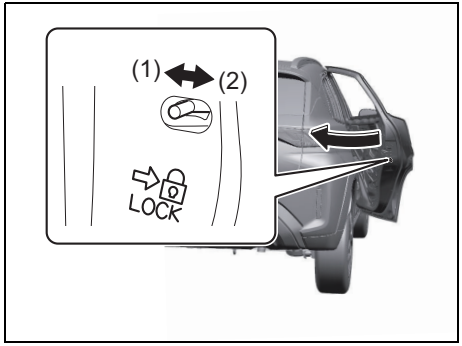

74TBX03006

(1) UNLOCK
(2) LOCK

Each of the rear doors is equipped with a child-proof lock which can be used to help prevent unwanted opening of the door from inside the vehicle. When the lock lever is in the lock position (2), the rear door can only be opened from outside. When the lock lever is in the unlock position (1), the rear door can be opened from inside or outside.

⚠ WARNING

Be sure to place the child-proof lock in the lock position whenever children are seated in the rear.

NOTE:
When you open a door from inside, put your hand out of the window and use the door handle.

Tailgate

Locking and unlocking from outside the vehicle

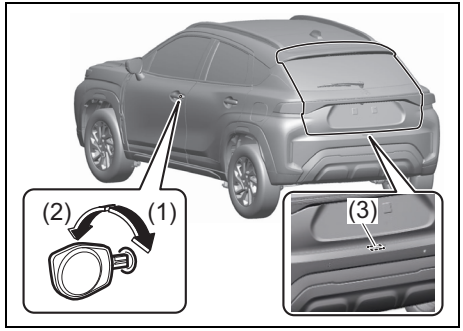

74U030014

(1) UNLOCK
(2) LOCK
(3) Tailgate unlatch switch

You can lock and unlock the tailgate by using the key in the driver's door lock.

To open the tailgate, push and hold the tailgate unlatch switch (3) and lift the tailgate.

NOTE:
When the tailgate is closed incompletely, follow the procedure below:
1) *Push the tailgate unlatch switch (3) and open the tailgate.*
2) *After a few seconds, close the tailgate.*
3) *Check that the tailgate is closed completely.*

⚠ CAUTION



74TBX03008

To avoid damage and malfunction of the dumper stay, observe the following precautions. Otherwise, the damper stay (4) which upholds the tailgate may not operate smoothly and the tailgate may not be kept up when opening it.

- **Do not scratch the rod part of the damper stay and do not attach foreign materials such as dirt, vinyl and tape to this part.**
- **Do not lay your hands on the damper stay and do not hang any objects.**

Unlocking from inside the vehicle

If you cannot unlock the tailgate by using the key in the driver's door lock due to a discharged lead-acid battery or malfunction, ask an authorized SUZUKI dealer or a qualified workshop. In emergency situations, follow the procedures below.

1) Remove the luggage compartment cover (if equipped) and fold the rear seat forward for easier access. Refer to "Folding Rear Seats" in "FOR SAFE DRIVING" section for details on how to fold the rear seat forward.

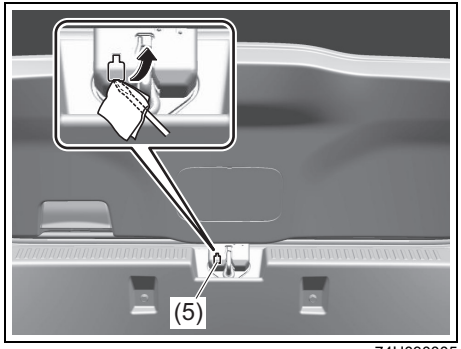

74U030005

2) Remove the cover (5) using a flat-bladed screwdriver.

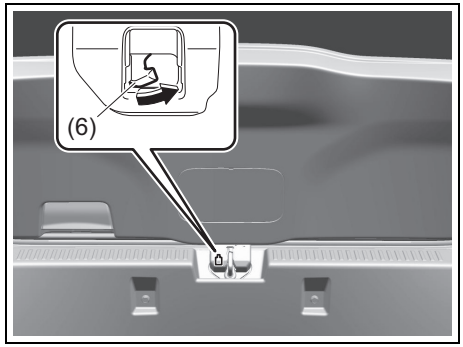

74U030006

3) Move the emergency lever (6) to the direction of the arrow with a flat-blade screwdriver as shown in the illustration.
4) Push open the tailgate from inside. The tailgate will be latched again by simply closing the tailgate.

If the tailgate cannot be unlatched by pushing the unlatch switch (3), have the vehicle inspected by an authorized SUZUKI dealer or a qualified workshop.

⚠ CAUTION

Check that there is no one near the tailgate when pushing open the tailgate from inside the vehicle.

Keyless Entry System Transmitter / Keyless Push Start System Remote Controller

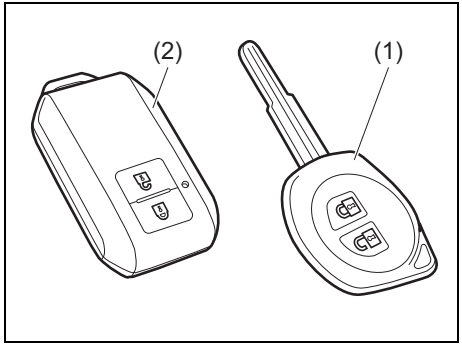

74TBX03010

Your vehicle is equipped with either a keyless entry system transmitter (1) or a keyless push start system remote controller (2). The transmitter has only a keyless entry system. The remote controller has a keyless entry system and a keyless push start system. For details, refer to the following explanations.

⚠ WARNING

Radio waves from the keyless push start system antenna(s) may interfere with operation of electrical medical equipment such as pacemakers. Failure to take the precautions listed below can increase the risk of severe injury or death due to radio wave interference.

- **Anyone who uses electrical medical equipment such as a pacemaker should consult the medical equipment supplier or their medical advisor about whether radio waves from the antenna(s) can interfere with the medical equipment.**
- **If radio wave interference is a concern, have the function of the antenna(s) disabled by an authorized SUZUKI dealer or a qualified workshop .**

Keyless Entry System Transmitter

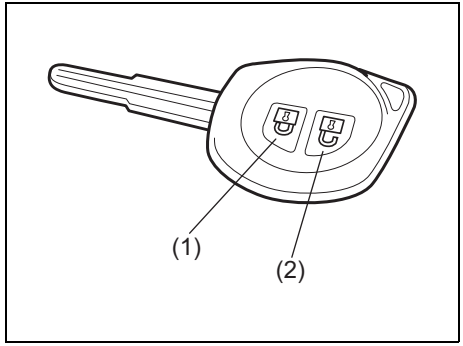

74TBX03011

(1) LOCK button
(2) UNLOCK button

You can lock or unlock all doors (including the tailgate) simultaneously by operating the transmitter near the vehicle.

Central door locking system

- To lock all doors, push LOCK button (1) once.
- To unlock only the driver's door, push UNLOCK button (2) once.
- To unlock other doors, push UNLOCK button (2) once again.

NOTE:
You can switch the function that unlocks all doors from requiring two pushes to requiring one push, and vice versa, via the information display setting mode. For details on how to use the information display, refer to "Information Display" in "INSTRUMENT CLUSTER" section.

The turn signal lights will flash once when the doors are locked.

When the doors are unlocked:
- The turn signal lights will flash twice.
- If the interior light switch is in DOOR position, the interior light will turn on for about 15 seconds and then fade out. If you insert the key into the ignition switch during this time, the light will start to fade out immediately.

Check that the doors are locked after you operate LOCK button (1).

NOTE:
If no door is opened within about 30 seconds after UNLOCK button (2) is operated, the doors will automatically lock again.

NOTE:
- *The maximum operating distance of the keyless entry system transmitter is about 5 m (16 ft.), but this can vary depending on the surroundings, especially near other transmitting devices such as radio towers or CB (Citizen's Band) radios.*
- *The door locks cannot be operated with the transmitter, if the ignition key is inserted in the ignition switch.*
- *When any door is open, the door locks can only be unlocked with the transmitter, and the turn signal light will flash.*
- *If you lose one of the transmitters, ask an authorized SUZUKI dealer as soon as possible for a replacement. Have an authorized SUZUKI dealer program the new transmitter code in your vehicle's memory so that the old code is erased.*

NOTICE

The transmitter is a sensitive electronic instrument. To avoid damaging the transmitter:
- **Do not expose it to impacts, moisture or high temperature such as by leaving it on the dashboard under direct sunlight.**
- **Keep the transmitter away from magnetic objects such as a television.**

Battery replacement
If the transmitter becomes unusable, replace the battery.

NOTE:
You may damage the transmitter when replacing its battery. Asking an authorized SUZUKI dealer or a qualified workshop is recommended.

To replace the battery of the transmitter:

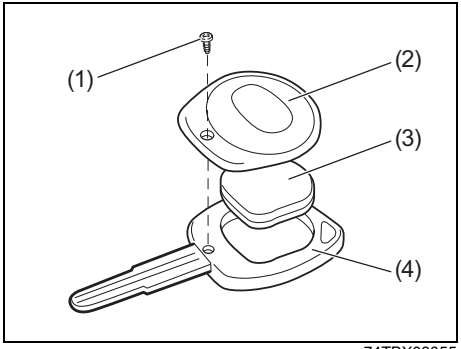

74TBX03055

1) Remove the screw (1), and open the transmitter cover (2).
2) Remove the transmitter (3) from the transmitter holder (4).

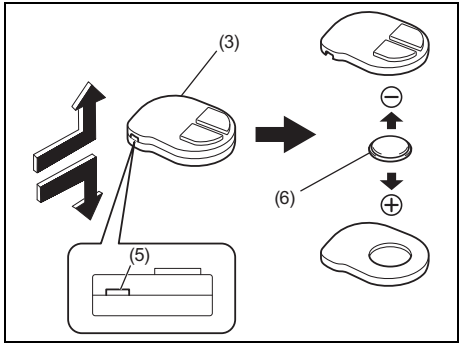

74TBX03056

(6) Lithium disc type battery: CR1616

3) Separate the case up and down while applying force to the slot (5) on the side of the transmitter (3).
4) Replace the battery (6) so its + terminal faces the "**+**" mark of the transmitter.
5) Close the case and install it into the transmitter holder (4).
6) Close the transmitter cover (2), install and tighten the screw (1).
7) Check that the door locks can be operated with the transmitter.
8) Dispose of the used battery properly according to applicable rules or regulations. Do not dispose of lithium batteries with ordinary household trash.

⚠ WARNING

Swallowing a lithium battery may cause serious internal injury. Do not allow anyone to swallow a lithium battery. Keep lithium batteries away from children and pets. If swallowed, contact a physician immediately.

NOTICE

- **The transmitter is a sensitive electronic instrument. To avoid damaging it, do not expose it to dust or moisture or tamper with internal parts.**
- **When replacing the battery by yourself, the transmitter controller could be damaged affected by static electricity. Discharge the static electricity built up in your body by touching metal before replacing the battery.**

NOTE:
Used batteries must be disposed of properly according to applicable rules or regulations and must not be disposed of with ordinary household trash.

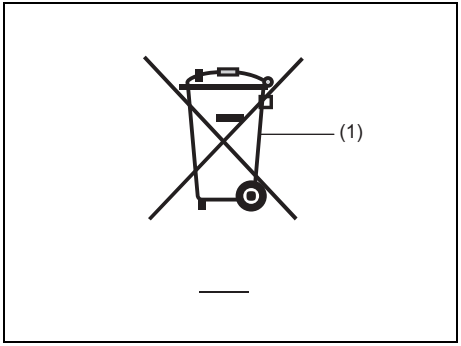

74TBX03014

(1) Crossed-out wheeled bin symbol

The crossed-out wheeled bin symbol (1) indicates that a used battery should be collected separately from ordinary household trash.

By ensuring the used battery is disposed of or recycled correctly, you will help prevent potential negative consequences for the environment and human health, which could otherwise be caused by inappropriate battery disposal. The recycling of materials will help to conserve natural resources. For more detailed information about disposing of or recycling of the used battery, consult an authorized SUZUKI dealer or a qualified workshop.
Be careful not to lose your key and to leave it in the locked vehicle.

⚠ WARNING

When you take the remote controller in an airplane, do not press the lock button or the unlock button. When you put the remote controller in a bag, place it so that either of these buttons is not pressed easily. If either of these buttons is pressed, radio wave may interfere with operation of the airplane.
***The remote controller is an electronic device which has a restriction on its use in the airplane.**

Lithium battery



74TBX03060

⚠ WARNING

Do not ingest the battery, Chemical Burn Hazard
(The remote control supplied with)
This product contains a coin/button cell battery. If the coin/battery cell battery is swallowed, it can cause severe internal burns in just 2 hours and can lead to death.
Keep new and used batteries away from children. If the battery compartment does not close securely, stop using the product and keep it away from children. If you think batteries might have been swallowed or placed inside any part of the body, seek immediate medical attention.

Keyless Push Start System Remote Controller

The remote controller enables the following operations:

- You can lock or unlock the doors by operating LOCK/UNLOCK buttons on the remote controller. Refer to the explanation in this section.
- You can lock or unlock the doors by pushing the request switch. For details, refer to the explanation in this section.
- You can start the engine without using an ignition key. For details, refer to “Engine Switch (Vehicle With Keyless Push Start System) (if equipped)” in “OPERATING YOUR VEHICLE” section.

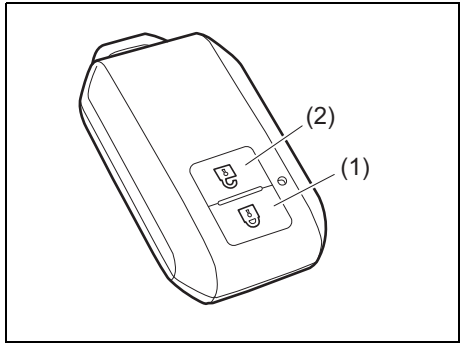

74TBX03015

(1) LOCK button
(2) UNLOCK button

There are two ways to lock or unlock all doors (including the tailgate) simultaneously by operating the remote controller near the vehicle.

Central door locking system
- To lock all doors, push LOCK button (1) once.
- To unlock only the driver's door, push UNLOCK button (2) once.
- To unlock other doors, push UNLOCK button (2) once again.

NOTE:
You can switch the function that unlocks all doors from requiring two pushes to requiring one push, and vice versa, via the information display setting mode. For details on how to use the information display, refer to "Information Display" in "INSTRUMENT CLUSTER" section.

The turn signal lights will flash once and the exterior buzzer will sound once when the doors are locked.

When the doors are unlocked:
- The turn signal lights will flash twice and the exterior buzzer will sound twice.
- If the interior light switch is in DOOR position, the interior light will turn on for about 15 seconds and then fade out. If you press the engine switch during this time, the light will start to fade out immediately.

Check that the doors are locked after you operate LOCK button (1).

NOTE:
If no door is opened within about 30 seconds after UNLOCK button (2) is operated, the doors will automatically lock again.

NOTE:
- *The maximum operating distance of the remote controller is about 5 m (16.4 ft.), but this can vary depending on the surroundings, especially near other transmitting devices such as radio towers or CB (Citizen's Band) radios.*
- *The door locks cannot be operated with the remote controller if the ignition mode is other than the "LOCK" (OFF).*
- *When any door is open, if you push LOCK button on the remote controller, the exterior buzzer will sound and doors cannot be locked.*
- *If you lose one of the remote controllers, ask an authorized SUZUKI dealer or a qualified workshop as soon as possible for replacement. Have an authorized SUZUKI dealer or a qualified workshop for program the new remote controller code in your vehicle's memory so that the old code is erased.*

Keyless unlocking/locking using the request switches

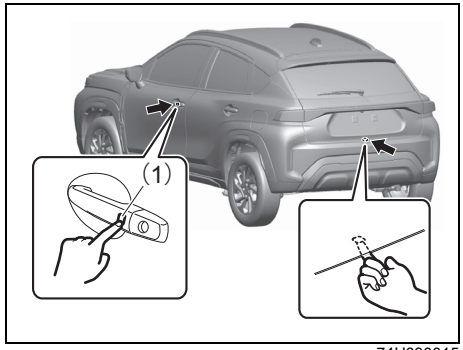

74U030015

When the remote controller is within the operating range described in this section, you can lock or unlock all the doors (including tailgate) by pushing the request switch (1) on the driver's door handle or front passenger's door handle or tailgate.

When all doors are unlocked:
- To lock all doors, push one of the request switches once.

The turn signal lights will flash once and the exterior buzzer will sound once when the doors are locked.

To unlock a door or all doors:
- Push one of the request switches once to unlock only one door.

• Push one of the request switches twice to unlock all doors.

NOTE:
You can switch the function that unlocks all doors from requiring two pushes to requiring one push, and vice versa, via the information display setting mode. For details on how to use the information display, refer to "Information Display" in "INSTRUMENT CLUSTER" section.

When the doors are unlocked:
• The turn signal lights will flash twice and the exterior buzzer will sound twice.
• If the interior light switch is in DOOR position, the interior light will turn on for about 15 seconds and then fade out. If you press the engine switch during this time, the light will start to fade out immediately.

Check that the doors are locked after you operate the request switch to lock the doors.

NOTE:
- *The door locks cannot be operated by the request switch under the following conditions:*
  – *If any door is open or is not completely closed.*
  – *If the ignition mode is in any other mode than LOCK (OFF).*
- *If no doors are opened within about 30 seconds after unlocking the doors by pushing the request switch, the doors will be locked again automatically.*

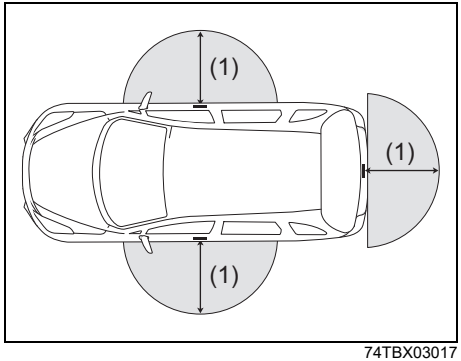

74TBX03017

(1) 80 cm (2.6 ft)

When the remote controller is within approximately 80 cm (2.6 ft) from a front door handle or the tailgate switch, you can lock or unlock the doors by pushing the request switch.

NOTE:
- *If the remote controller is outside the request switch operating range described above, you will not be able to operate the request switch.*
- *If the battery of the remote controller runs down or there are strong radio waves or noise, the request switch operating range may be reduced or the remote controller may be inoperative.*
- *If the remote controller is too close to the door glass, the request switches may not operate.*
- *If a spare remote controller is in the vehicle, the request switches may not operate normally.*
- *The remote controller will only operate a request switch if it is within the switch's operating range. For example, if the remote controller is within the operating range of the driver's door request switch but not the front passenger's door request switch or the tailgate request switch, the driver's door switch can be operated but the front passenger's door switch or tailgate switch cannot be operated.*
- *If the remote controller is located in the following places in the vehicle, the remote controller may be detected and the request switch may be activated depending on the radio wave condition, there is a risk of that the remote controller may be trapped inside the vehicle.*
  – *On the instrument panel*
  – *Floor*
  – *Luggage compartment*
  – *Deep in storage compartments such as the glove box or a door pocket, etc.*

NOTICE

The remote controller is a sensitive electronic instrument. To avoid damaging the remote controller:
- **Do not expose it to impacts, moisture or high temperature such as by leaving it on the dashboard under direct sunlight.**
- **Keep the remote controller away from magnetic objects such as a television.**

NOTE:
The keyless push start system may not function correctly in certain environments or under certain operating conditions such as the following:
- *When there are strong signals coming from a television, power station or a cellular phone.*
- *When the remote controller is in contact with or covered by a metal object.*
- *When a radio wave type remote keyless entry is used nearby.*
- *When the remote controller is placed near an electronic device such as personal computer.*

Some additional precautions you should take and information you should be aware of are:
- *Check that the key is stowed in the remote controller. If the remote controller becomes unusable, you will not be able to lock or unlock the doors.*
- *Check that the driver always carries the remote controller.*
- *If you lose one of the remote controllers, ask an authorized SUZUKI dealer or a qualified workshop as soon as possible for a replacement. Have an authorized SUZUKI dealer or a qualified workshop program the new remote controller code in your vehicle's memory so that the old code is erased.*
- *You can use up to four remote controllers and the keys for your vehicle. Ask an authorized SUZUKI dealer or a qualified workshop for details.*
- *The battery life of the remote controller is about two years, but it can vary depending on usage conditions.*

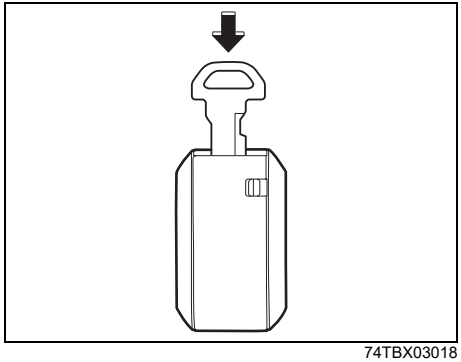

74TBX03018

To stow the key into the remote controller, push the key in the remote controller until you hear a click.

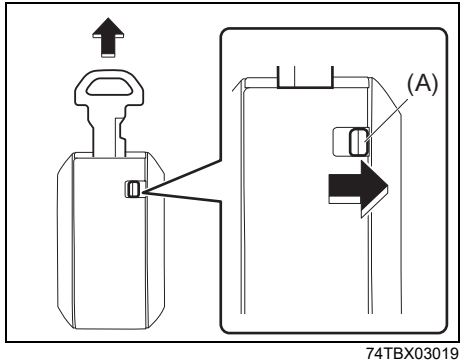

74TBX03019

To remove the key from the remote controller, slide the lock knob (A) in arrow direction and pull the key out from the remote controller.

Request switch warning buzzer

The exterior buzzer beeps for about 2 seconds in the following conditions to warn you that the request switch is not working:

- The request switch is pressed after all doors are closed with the ignition mode changed to ACC or ON position by pressing the engine switch when the remote controller is outside the vehicle.
- The request switch is pressed in any of the following conditions after changing the ignition mode to LOCK (OFF) by pressing the engine switch.
  - The remote controller is left inside the vehicle.
  - Any door (including the tailgate) is open.

Press the request switch again after doing the following:
With the ignition mode changed to LOCK (OFF) by pressing the engine switch, bring out the remote controller if it is inside the vehicle and check that all doors are completely closed.

Reminder function

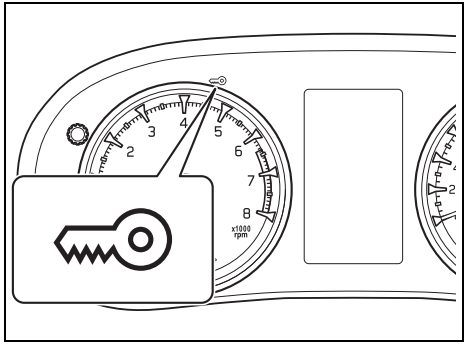

74U030016

If the remote controller is not in the vehicle under the following conditions, the buzzer sounds intermittently for about 2 seconds and the immobilizer/keyless push start system warning light on the instrument cluster blinks:
When one or more doors are opened and all of the doors are later closed with the ignition in any other mode than LOCK (OFF).

The indicator light will turn off within several seconds after the remote controller is returned to an area of the vehicle other than the rear luggage area.

If the remote controller is left in the vehicle and you lock the driver's door or front passenger's door as described below, the door will be automatically unlocked.

- If you open the driver's door and lock the door by turning the lock knob forward or pushing the power door locking switch, the driver's door will be automatically unlocked.
- If you open the front passenger's door and lock the door by turning the lock knob forward or pushing the power door locking switch, the front passenger's door will be automatically unlocked.

NOTE:

- *The reminder will not operate when the remote controller is on the instrument panel, in the glove box, in a storage compartment, in the sun visor or on the floor, etc.*
- *Check that the driver always carries the remote controller.*
- *Do not leave the remote controller in the vehicle when leaving the vehicle.*

Keyless push start system remote controller battery consumption warning light (Instrument cluster Type A) (If equipped)

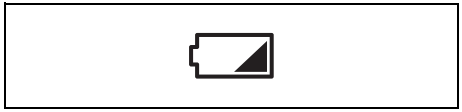

70K122

If the remote controller becomes unreliable, this light appears on the information display for several seconds when the engine switch is pressed to change the ignition mode to ON.

NOTE:
If this light comes on, replace the battery, and then perform the following operation to reset the light.
- *Lock and unlock the doors with the remote controller twice or more.*

If the power of your spare remote controller is enough, you can reset the light by operating above procedure with the spare remote controller.

Battery Replacement
If the remote controller becomes unreliable, replace the battery as follows:

NOTE:
You may damage the remote controller when replacing its battery. Asking an authorized SUZUKI dealer or a qualified workshop is recommended.

To replace the battery of the remote controller:

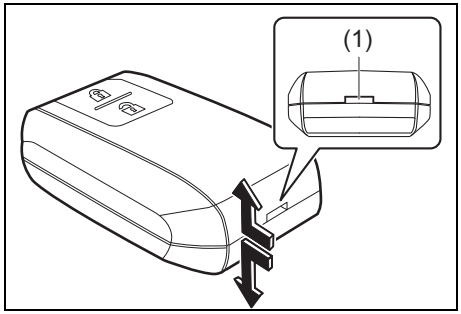

74TBX03050

1) Pull the key out from the remote controller.
2) Separate the remote controller up and down while applying force to the slot (1) on the side of the remote controller.

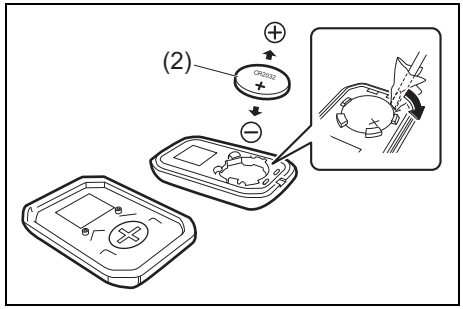

74TBX03022

(2) Lithium disc type battery: CR2032

3) Replace the battery (2) so its + terminal faces the bottom of the case as shown in the illustration.
4) Close the remote controller firmly.
5) Check that the door locks can be operated with the remote controller.
6) Dispose of the used battery properly according to applicable rules or regulations. Do not dispose of lithium batteries with ordinary household trash.

⚠ WARNING

Swallowing a lithium battery may cause serious internal injury or death in the worst case. Do not allow anyone to swallow a lithium battery. Keep lithium batteries away from children and pets. If swallowed, contact a physician immediately.

NOTICE

- **The remote controller is a sensitive electronic instrument. To avoid damaging it, do not expose it to dust or moisture or tamper with internal parts.**
- **When you replace the battery by yourself, touch a metallic part and remove static electricity to prevent damaging the remote controller.**

NOTE:

- *Used batteries must be disposed of properly according to applicable rules or regulations and must not be disposed of with ordinary household trash.*
- *You may damage the remote controller when replacing its battery. Asking an authorized SUZUKI dealer or a qualified workshop is recommended.*
- *When you purchase the battery by yourself at an authorized SUZUKI dealer or a qualified workshop or the other stores, check the year of manufacture for the battery.*

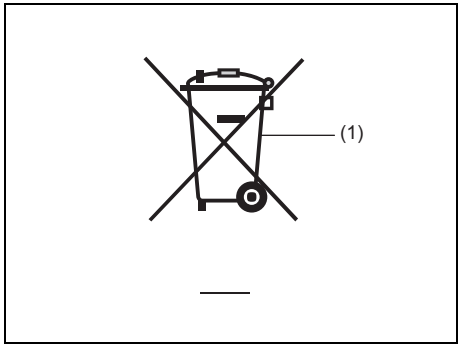

74TBX03014

(1) Crossed-out wheeled bin symbol

The crossed-out wheeled bin symbol (1) indicates that a used battery should be collected separately from ordinary household trash.

By ensuring the used battery is disposed of or recycled correctly, you will help prevent potential negative consequences for the environment and human health, which could otherwise be caused by inappropriate battery disposal. The recycling of materials will help to conserve natural resources. For more detailed information about disposing of or recycling of the used battery, consult an authorized SUZUKI dealer or a qualified workshop.

Security System

The security system is armed in about 20 seconds after you close and lock all doors (including engine hood and tailgate) by using the keyless entry system transmitter, keyless push start system remote controller or request switch.
Once the system is armed, any attempt to open a door by using any other means (*) than the keyless push start system remote controller, the request switch, the keyless entry system transmitter or open the engine hood will cause the alarm to be triggered.
* These means include the following:
  – The key
  – The lock knob on a door
  – The power door locking switch

NOTICE
Do not modify or remove the theft deterrent alarm system. If modified or removed, the system cannot be properly operated.

NOTE:
- *The theft deterrent alarm system generates alarms when any of the predetermined conditions is met. However, the system does not have any function of blocking unauthorized entry into your vehicle.*
- *Always use the keyless push start system remote controller, the request switch or the keyless entry system transmitter to unlock the doors when the theft deterrent alarm system has been armed. Using a key instead will trigger the alarm.*
- *If a person who does not know the theft deterrent alarm system is going to drive your vehicle, we recommend you explain the system and its operation to the person, or disable the system beforehand. Mistakenly triggering the alarm may cause a nuisance to others.*
- *Even if the theft deterrent alarm system is armed, you should still be careful to guard against theft. Do not leave money or things of value in your vehicle.*
- *The theft deterrent alarm system is maintenance-free.*

How to Arm the Security System

Lock all doors (including engine hood and tailgate) using the keyless entry system transmitter, keyless push start system remote controller or request switch.
When the system is armed, the indicator continues to blink at intervals of approximately 2 seconds.

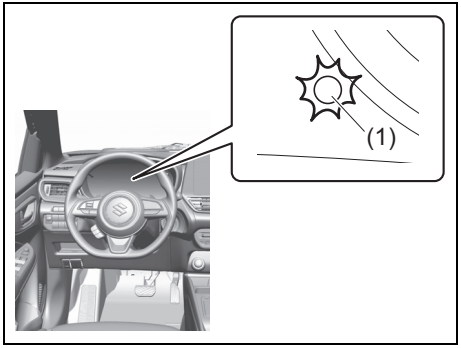

74U030017

NOTE:
- *To prevent the alarm from being accidentally triggered, avoid arming it while anyone remains inside the vehicle. The alarm will be triggered if any person inside unlocks a door by operating the lock knob or power door locking switch.*
- *The security system is not armed when all doors are locked using the key from outside, using the door lock knobs or the central door locking switch from inside.*

- *If any door is not operated within approximately 30 seconds after the doors have been unlocked using the keyless entry system transmitter, keyless push start system remote controller or request switch, the doors are automatically locked again. After the doors are locked, the theft deterrent alarm system will be armed in about 20 seconds if the system is in the enabled state.*
- *If the security system indicator (1) blinks when the ignition switch is in the "ON" position or the ignition mode is "ON", there may be something wrong with the security system. Ask an authorized SUZUKI dealer or a qualified workshop to inspect the system.*

How to Disarm the Security System

Simply unlock the doors using the keyless entry system transmitter, keyless push start system remote controller or request switch. The security system indicator will go out, indicating that the security system is disarmed.

How to Stop the Alarm

Should the alarm be triggered accidentally, the alarm will stop by the following operations.

- Press the engine switch to change the ignition mode to ON or turn the ignition switch to "ON" position in case of emergency.
- Unlock the doors using the keyless entry system transmitter, keyless push start system remote controller or request switch.

NOTE:

- *Even after the alarm has stopped, if you lock the doors using the keyless entry system transmitter, keyless push start system remote controller or request switch, the security system will be rearmed.*
- *If you disconnect the battery while the security system is in the armed condition or the alarm is actually in operation, the alarm will be re-triggered when the battery is reconnected.*
- *Even after the alarm has stopped at the end of the predetermined operation time, it will be triggered again if any of the doors or engine hood is opened, without disarming the security system.*

Checking Whether the Alarm has Been Triggered During Parking

If the alarm was triggered and you then turn the ignition switch to "ON" position or the ignition mode is ON the security system indicator will blink rapidly for about 8 seconds and a buzzer will beep 4 times during this period. If this happens, check whether the vehicle has been broken into while you were away from it.

Windows

Electric Window Controls

The electric windows can only be operated when the ignition switch is in “ON” position or the ignition mode is ON.

Driver’s side

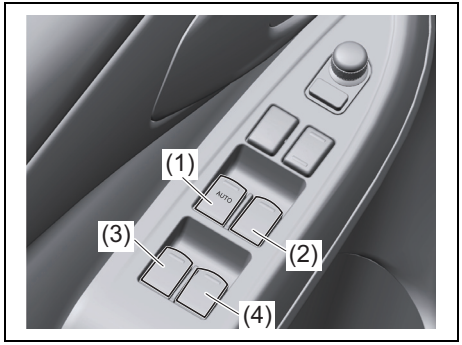

74U030018

The driver’s door has a switch (1) to operate the driver’s window, and a switch (2) to operate the front passenger’s window or there are switches (3), (4), to operate the rear left and right passenger windows, respectively.

Passenger’s door / rear door

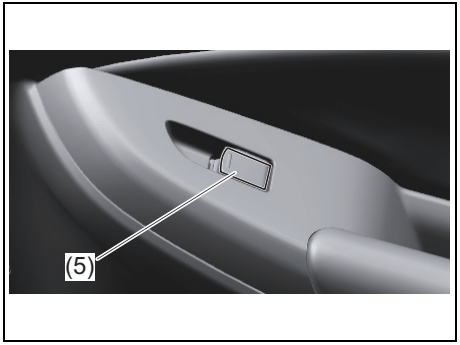

74U030019

The passenger’s door has a switch (5) to operate the passenger’s window.

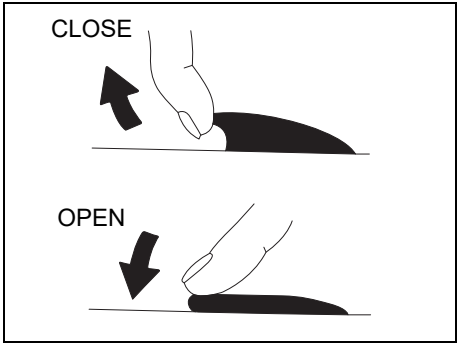

74TBX03026

To open a window, push the top part of the switch. To close the window, lift up the top part of the switch.

The driver’s window has AUTO-DOWN and AUTO-UP features for greater convenience (at toll booths or drive-through restaurants, for example). These features allow the driver to open or close the window without holding the window switch in DOWN or UP position. Press down or lift up the driver’s window switch completely and release it. To stop the window before it reaches the FULL-DOWN or FULL-UP position, pull up or push down the switch briefly.

Lock switch



74U030020

The driver’s door also has a lock switch for the passenger’s window(s). When you push in the lock switch, the passenger’s window(s) cannot be raised or lowered by

operating any of the switches (2), (3), (4) or (5). To restore normal operation, release the lock switch by pushing it again.

⚠ WARNING

- **When opening or closing a window, a part of body such as hands, legs and neck may be caught by the window and an accident may occur. When you operate a window, observe the following precautions:**
  - **A driver and the other passengers should be careful when opening or closing a window.**
  - **Do not allow a child to operate the window switches.**
  - **You should always lock the passenger's window operation when there are children in the vehicle. Children can be seriously injured if they get part of their body caught by the window during operation. Refer to "Lock switch" in this section for details.**
  - **When you leave your vehicle, make sure to press the engine switch to change the ignition mode to OFF. Then, carry your key with you and take a child or children out of the vehicle.**

(Continued)

⚠ WARNING

(Continued)

  - **When you open or close the front passenger's window or the rear windows on the driver's side, check that the other passengers and children do not take their hands and faces outside the vehicle, before the window operation. Also, make sure to inform them that you will perform the window operation.**
- **When you operate the electric window controls from the outside of the window, your hands or neck may be caught by the window and an accident may occur. Do not operate the electric window controls from the outside of the window.**

NOTE:
If you drive with one of the rear windows open, you may hear a loud sound caused by air vibration. To reduce the sound, open the driver's or front passenger's window, or narrow the rear window opening.

Pinching Prevention Function

The driver's window is equipped with a pinching prevention function. This function detects a foreign object that is caught in the window as it is being closed by AUTO-UP feature, which allows you to close the window without holding the window switch in UP position, and stops the window from closing to prevent damage.

⚠ WARNING

The function may not detect the object depending on shape, size, hardness and position of the object caught by the closing window. This may cause severe injury.
Be very careful when opening or closing the windows.

⚠ CAUTION

- **The pinching prevention function does not operate while you are holding the window switch in UP position.**
- **The pinching prevention function may not detect an object caught in the window just before the window is fully closed.**

NOTE:
Even if you cannot close the window by the AUTO-UP feature because there may be something wrong with the pinching prevention function, you can close the window by holding the window switch in UP position.
If you drive in extreme off-road condition, the pinching prevention function may operate accidentally because the window reacts to vehicle jolting.

Pinching prevention function initialization
When you disconnect and reconnect the lead-acid battery or replace the fuse, the function will be deactivated. In this condition, the AUTO-DOWN feature will be deactivated, while the AUTO-UP feature may remain activated. The pinching prevention function needs to be initialized.

To initialize the pinching prevention function, use the following procedure:
1) Turn the ignition switch to “ON” position or press the engine switch to change the ignition mode to ON.
2) Open the driver’s window fully by holding the window switch in DOWN position.
3) Close the driver’s window by holding the switch in UP position, and keep holding the switch for 2 seconds after the window is fully closed.
4) Check the driver’s window to see if the AUTO-DOWN/UP feature works.

⚠ WARNING

As the pinching prevention function will not operate until its initialization is completed, an accident may occur. Make sure to perform the pinching prevention function initialization.

If the AUTO-DOWN/UP feature will not work after initialization, there might be something wrong with the pinching prevention function. Have your vehicle inspected by an authorized SUZUKI dealer or a qualified workshop.

Headlight Leveling Switch

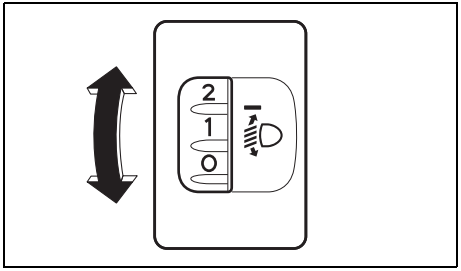

74TBX03028

Level the headlight beam according to the load condition of your vehicle by turning this switch. The chart shows the appropriate switch position for different vehicle load conditions.

	LED headlight
Vehicle Load Condition	Switch Position
Driver only	0
Driver + 1 passenger (in front seat)	0
Driver + 4 passengers, no cargo	1.5
Driver + 4 passengers, cargo added	2
Driver + full cargo	3.5

Lighting Control Lever

Lighting Operation

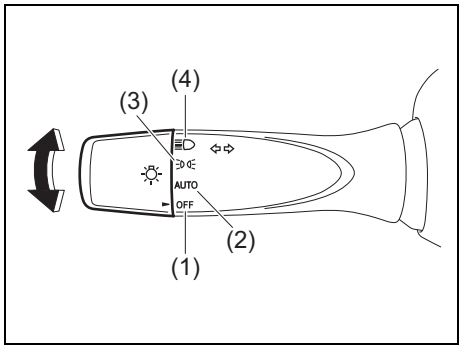

74U030021

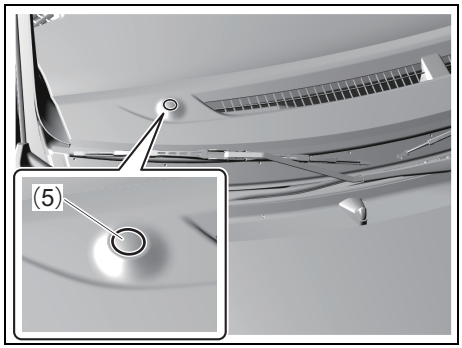

74U030022

Your vehicle's lighting system is controlled by two main systems: the lighting control lever and the auto-on headlight system (when the lighting switch is in "AUTO" position).
The two systems work together to operate your lights as shown in the following chart:

ON: Lights ON
LIGHT: When it is light around the light sensor (5).
DARK: When it is dark around the light sensor (5).

Lighting switch position	Main lights to be operated	Ignition switch in the "LOCK" or "ACC" position / Ignition mode LOCK (OFF) or ACC		Ignition switch in the "ON" position / Ignition mode ON	
		LIGHT	DARK	LIGHT	DARK
(1) OFF	Position lights, License plate light, Tail lights	–	–	–	–
	Headlights	–	–	–	–
(2) AUTO	Position lights, License plate light, Tail lights	–	–	–	ON
	Headlights	–	–	–	ON
(3) ≡D	Position lights, License plate light, Tail lights	ON	ON	ON	ON
	Headlights	–	–	–	–
(4) ≡D	Position lights, License plate light, Tail lights	ON	ON	ON	ON
	Headlights	ON	ON	ON	ON

To turn the lights on or off, twist the knob on the end of the lighting control lever. There are four positions:

OFF (1)

Front position lights, tail lights, license plate light, instrument lights and headlights are off.

AUTO (2)

This function works when the ignition switch is turned to “ON” position or the engine switch is pressed to change the ignition mode to ON. The headlights, position lights, tail lights and license plate light are turned on and off automatically according to the amount of outside light detected by a sensor. They go out automatically when you turn the ignition switch to “ACC” or “LOCK” position or change the ignition mode to ACC or LOCK (OFF) by pressing the engine switch.

The light sensor (5) for sensing the amount of outside light is installed on the passenger’s seat side of instrument panel.

For the vehicles with SUZUKI SAFETY SUPPORT, when the following conditions are met, you can use the high beam assist.

- The engine switch is pressed to change the ignition mode to ON
- The headlights are turned on when it becomes dark outside the vehicle
- The lighting switch is in “AUTO” position

For details, refer to “High beam assist” (P.5-78).

⚠ CAUTION

If the light sensor area of the windshield is covered with mud, ice, or other similar substances, the headlights, position lights, tail lights and license plate light may be turned on even when it is still light outside.

NOTE:

- *Avoid covering the light sensor area of the windshield with a sticker. The sticker may impair the performance of the sensor and make the system unable to control operation of the lights correctly.*
- *If you turned the ignition switch to “ON” position or changed the ignition mode to ON by pressing the engine switch and “AUTO” position remains selected, the headlights, position lights, tail lights and license plate light come on automatically as it gets dark outside, even with the engine not running. Leaving the lights lit for a long time may lead to a completely discharged battery.*

(3)

Front position lights, tail lights, license plate light and instrument lights are on, but headlights are off.

(4)

Front position lights, tail lights, license plate light, instrument lights and headlights are on.

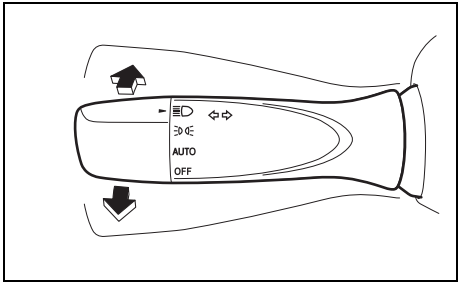

74U030023

With the headlights on, push the lever forward to switch to the high beams (main beams) and pull the lever toward you to switch to the low beams. When the high beams (main beams) are on, a light on the instrument cluster will come on. To momentarily activate the high beams (main beams) as a passing signal, pull the lever slightly toward you and release it when you have completed the signal.

Auto-on headlight system

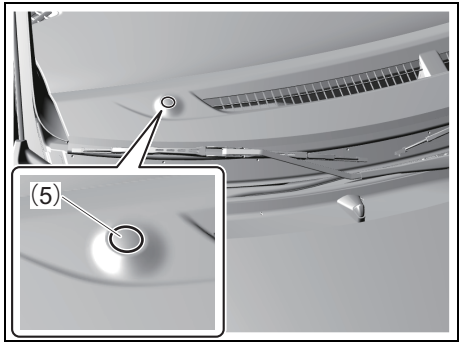

74U030022

The auto-on headlight system automatically turns on all lights that are operated by the lighting switch, when the following three conditions are all met.

Conditions for auto-on headlight system operation:
1) It is dark around the light sensor (5).
2) The lighting switch is in “AUTO” position.
3) You turn the ignition switch to “ON” position or press the engine switch to change the ignition mode to ON.

This system is activated by a signal from the light sensor (5) on the passenger’s seat side of instrument panel. Do not cover the sensor (5). Otherwise, the system will not work correctly.

⚠ WARNING

To help avoid an accident due to reduced visibility, turn on your headlights before driving into a tunnel, parking structure, etc.

NOTE:
The light sensor reacts even to infrared rays, so it may operate incorrectly when there are strong infrared rays.

Light Reminder Buzzer

The interior buzzer continuously beeps if you open the driver’s door without turning off the headlights and position lights. This function is triggered under the following condition:
The headlights and/or position lights are on even after the ignition switch is turned to “LOCK” position, or the engine switch is pressed to change the ignition mode to LOCK (OFF).

The buzzer stops sounding when you turn off the headlights and position lights.

NOTE:
A message is indicated on the information display in the instrument cluster while the buzzer is sounding.

Daytime Running Light (D.R.L.) System

When the engine is started, the daytime running lights are turned on by this system.

Conditions for D.R.L. system operation
- The engine is running.
- Headlights are off.

To change the function:
1) Turn the ignition switch to “ON” position or press the engine switch to change the ignition mode to ON.
2) Perform the following steps within 15 seconds after Step 1).
   a)Turn lighting switch to “≡D◊E” position.
   b)Turn lighting switch to “OFF” position.
   c)Repeat Step a) to b) for another 4 more times.
   d)Turn lighting switch to “≡D” position.
   e)Turn lighting switch to “OFF” position.
   f)Repeat Steps d) to e) for another 4 more times.
3) Warning buzzer (in combination meter) sounds by the specified number for each mode as follows.
   - Changed from “Disabled” mode to “Active” mode: Buzzer sounds twice.
   - Changed from “Active” mode to “Disabled” mode: Buzzer sounds once.

NOTE:
- *Brightness of the daytime running lights is different from the brightness of the position lights, but it is not a malfunction.*

- *When using the turn signal light, the Daytime Running Light on the side where the turn signal light is blinking goes off.*

Guide Me Light

Guide me light has two functions of “To home” and “To car” for improving your visibility in the dark.

“To home” function
Even after you leave the car, the ground will be illuminated for a short while with this function. You can turn on the front position lights and the headlights in the low beam setting for about 10 seconds after the ignition switch is turned to “LOCK” position or the engine switch is pressed to change the ignition mode to LOCK (OFF).

To set the function:
1) Turn the lighting switch to “AUTO” position.
2) Turn the ignition switch to “LOCK” position or press the engine switch to change the ignition mode to LOCK (OFF).
3) Pull the lighting control lever toward you once and open the driver’s side door within 60 seconds. Or pull the lighting control lever toward you once while the driver’s side door is open.

To cancel the function:
Perform any of the following operations.
- Pull the lighting control lever toward you once.
- Turn the ignition switch to “ACC” or “ON” position or change the ignition mode to ACC or ON by pressing the engine switch.
- Turn the lighting switch to any other position than “AUTO” position.

NOTE:
- *When the “To home” is functioning, the headlights (high beam) are not turned on.*
- *Lighting time of the “To home” function can be changed on the information display. Refer to “Information Display” in “INSTRUMENT CLUSTER” section.*

“To car” function
Before you get in the vehicle, the ground will be illuminated for a short while to easily lead the driver to the vehicle. If UNLOCK button of the keyless entry system transmitter or the keyless push start system remote controller is pressed while the lighting switch is positioned in “AUTO”, the front position lights and the headlights in the low beam are turned on for 10 seconds.
This function will operate only when it is dark outside the vehicle.

To cancel the function:
Perform any of the following operations.
- Lock the doors by using the keyless entry system transmitter or the keyless push start system remote controller, the request switch or the key in the driver’s door lock.
- Turn the ignition switch to ACC or ON position or the engine switch is pressed to change the ignition mode to ACC or ON.
- Turn the lighting switch to any other position than AUTO position.

NOTE:
- *When the “To car” is functioning, the headlights (high beam) are not turned on.*
- *Lighting time of the “To car” function can be changed on the information display. Refer to “Information Display” in “INSTRUMENT CLUSTER” section.*

Adjusting headlight pattern

Headlight pattern, left hand traffic

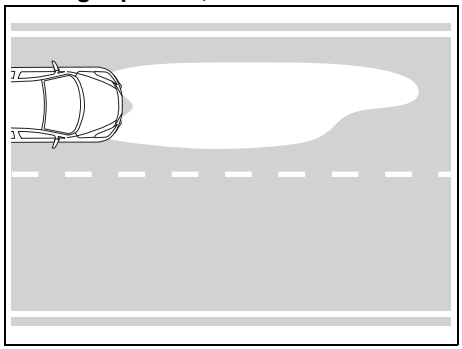

68PM00259

Headlight pattern, right hand traffic

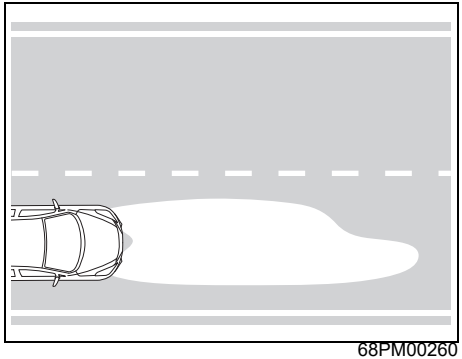

68PM00260

The headlight pattern must be adjusted to avoid dazzling oncoming motorists and can be set for right or left hand traffic.

The light pattern may not be as good.
You should readjust the light pattern by masking the headlight lens.

Left hand drive vehicle
To readjust the light pattern by masking the headlight for left hand traffic;

1) Copy the template as shown later in this section.
2) Transfer the template to a self-adhesive waterproof material and cut it out.
3) Position the cutout tape at the right distance from the center mark of the headlight lens.
   Refer to the dimensions in the following illustrations.

Right side headlight

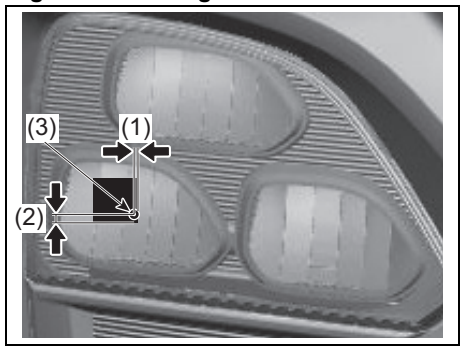

74U030037

(1) Horizontal line: approximately 1.5 mm
(2) Vertical line: approximately 6.5 mm
(3) Center mark (small projection on the inner surface of the lens)

Left side headlight

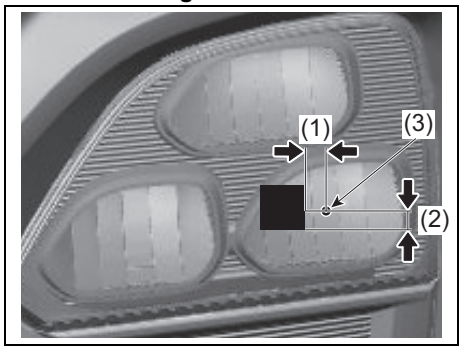

74U030039

(1) Horizontal line: approximately 11.5 mm
(2) Vertical line: approximately 9.0 mm
(3) Center mark (small projection on the inner surface of the lens)

Right hand drive vehicle

To readjust the light pattern by masking the headlight for right hand traffic;

1) Copy the template as shown later in this section.
2) Transfer the template to a self-adhesive waterproof material and cut it out.
3) Position the cutout tape at the left distance from the center mark of the headlight lens.
   Refer to the dimensions in the following illustrations.

Right side headlight

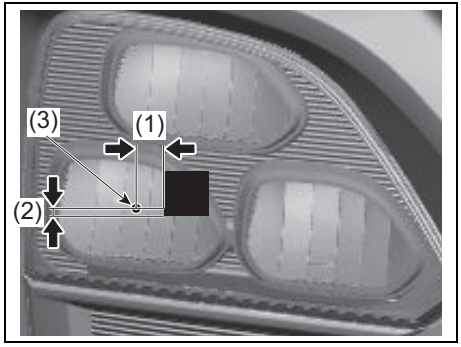

74U030038

(1) Horizontal line: approximately 16.5 mm
(2) Vertical line: approximately 4.0 mm
(3) Center mark (small projection on the inner surface of the lens)

Left side headlight

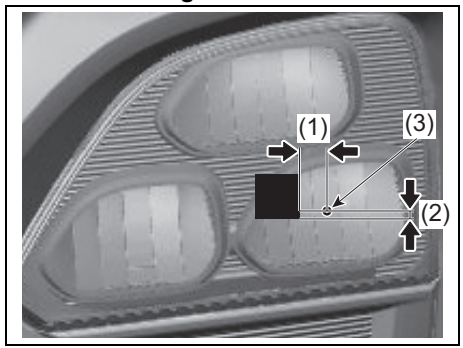

74U030040

(1) Horizontal line: approximately 16.5 mm
(2) Vertical line: approximately 4.0 mm
(3) Center mark (small projection on the inner surface of the lens)

Templates for headlights

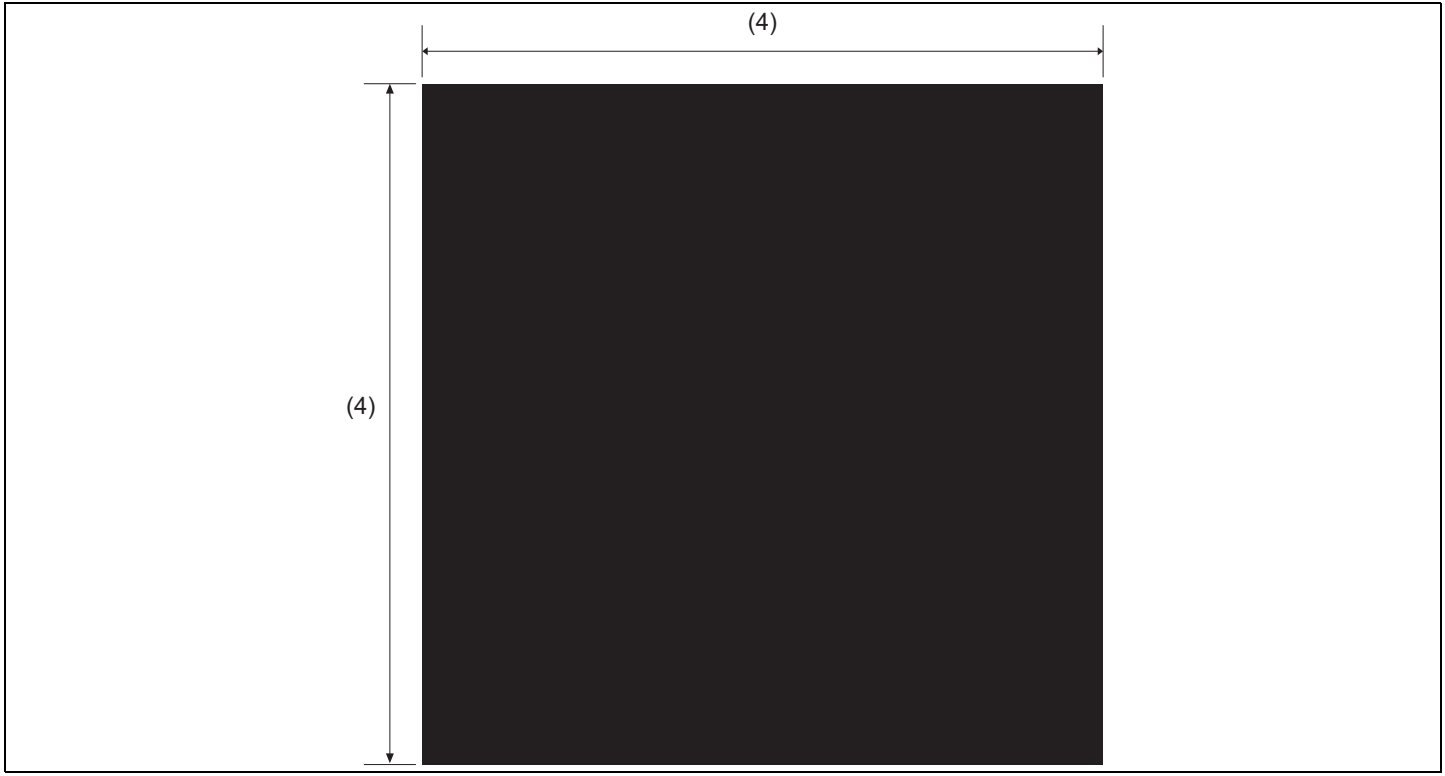

74TBX03062

(4) 27 mm (1.1 in.)

Turn Signal Control Lever

You can use the turn signal control lever when the ignition switch in “ON” position or the ignition mode ON.

Turn Signal Operation

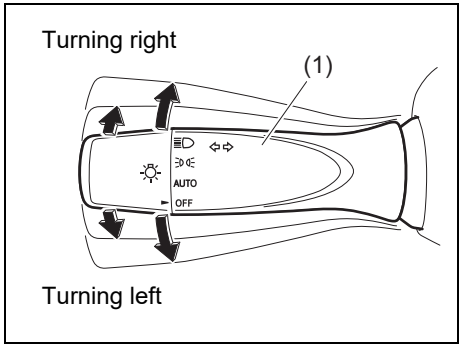

74U030024

- Move the turn signal control lever (1) as follows for left hand drive vehicles and vice-versa for right hand drive vehicles:
  – Turning left: Move the lever downward
  – Turning right: Move the lever upward
- When you move the lever, the turn signal lights as well as the turn signal light indicators on the instrument cluster will flash simultaneously.
- When the turn is completed, the signal will cancel and the lever will return to its normal position.
- When you move the lever to its original position, the turn signal lights as well as the turn signal light indicators on the instrument cluster will be turned off.

NOTE:
If the angle by which you turn the steering wheel is small, the lever will not return automatically to its original position. In this case, return the lever to its original position manually.

Lane change signal

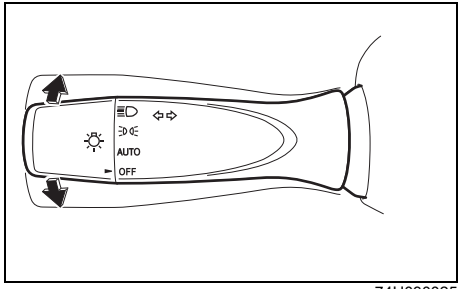

74U030025

Move the lever slightly in the directions in which you want to change lanes and hold the lever in the moved position.

- The turn signal and its indicator flash while the lever is held at the moved position.
- The turn signal and its indicator flash 3 times even if you returned the lever immediately after the activation.

NOTE:
- *The turn signal and its indicator can be set whether they flash 3 times after the turn signal lever is returned via the information display. Refer to “Information Display” in “INSTRUMENT CLUSTER” section.*
- *You can customize the setting for the number of flashing times of the turn signal and its indicator (1 to 4 times). Please ask an authorized SUZUKI dealer or a qualified workshop for the customization.*

Hazard Warning Switch

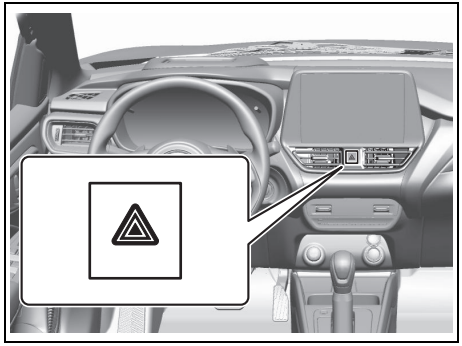

74U030026

You can use the hazard warning switch to warn the other drivers of possible risk of traffic hazard when you park your vehicle in case of emergency.

- Push the hazard warning switch to activate the hazard warning lights.All the turn signal lights as well as both turn signal indicators will flash simultaneously.
- Push the switch again to turn off the hazard warning switch.
- The instrument panel in the above figure is a typical example; the actual equipment depends on the vehicle type.

NOTICE

If you use the hazard warning switch for many hours with the engine stopped, the lead-acid battery may run out.
Do not use the hazard warning switch for many hours with the engine stopped.

Windshield Wiper and Washer Lever

When the ignition switch in “ON” position or the ignition mode ON, you can use the wiper/washer lever.

⚠ CAUTION

In cold weather, the sprayed washer fluid on the glass may get frozen and it may cause poor visibility to a driver. Use the defroster to warm the glass and spray the washer fluid. Refer to “Heating and Air Conditioning System” in the “OTHER CONTROLS AND EQUIPMENT” section.

NOTICE

- **If you use the wipers with the glass dried, the glass and the wiper blade rubbers may be damaged. When the glass is dry, use the washer fluid and then use wipers.**
- **If you operate the wipers with the wiper blades stuck on the glass, the wiper blade rubbers may be damaged or the wipers may be broken. When the wiper blades are stuck on the glass, do not operate the wipers.**
- **If you use the washer when the washer fluid cannot be sprayed enough, the washer pump may be broken. When the washer fluid cannot be sprayed enough, turn off the washer switch.**

When the operative wipers suddenly stop

When the wipers are under heavy load such as covered by snow and the temperature of the wiper motor becomes high, the breaker will be activated and the wipers will temporarily stop to protect the wiper motor from overheating.
If this happens, perform the following operations:

1) Stop the vehicle in a safe place, and turn the ignition switch to "ACC" or "LOCK" position or press the engine switch to change the ignition mode to ACC or LOCK (OFF).
2) Move the wiper lever and switch to "OFF" position.
3) Remove obstacles such as snow on the wipers.
4) After a while, when the temperature of the wiper motor becomes low enough, the breaker will be reset automatically and you can use the wipers.

If you cannot use the wipers after a while, there may be another problem. Ask an authorized SUZUKI dealer or a qualified workshop to have the wipers inspected.

Windshield Wipers

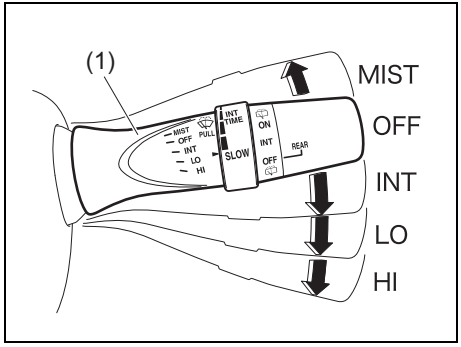

74U030027

You can operate the windshield wipers by moving the lever (1) upward or downward.

MIST	Temporary operation only while the lever is up
OFF	Off
INT	Intermittent operation
LO	Low speed operation
HI	High speed operation

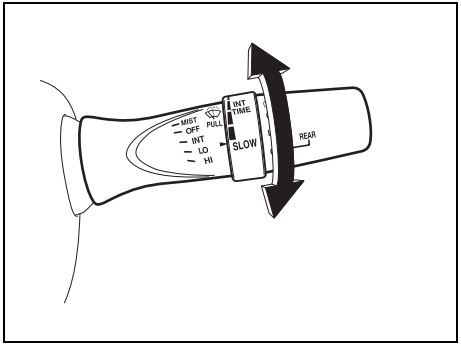

74U030036

If the lever is equipped with "INT TIME" control, turn the control forward or backward to adjust the intermittent wiper operation to the desired interval.

Windshield Washer

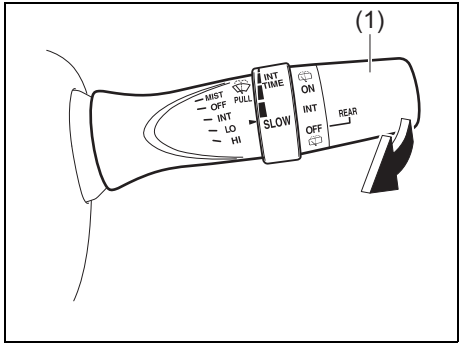

74U030028

If you pull the lever (1) toward you, the windshield washer fluid will be sprayed and the windshield wipers will automatically operate a few times.

⚠ WARNING

- **To prevent windshield icing in cold weather, turn on the defroster to heat the windshield before and during windshield washer use.**
- **Do not use radiator antifreeze in the windshield washer reservoir. It can severely impair visibility when sprayed on the windshield, and can also damage your vehicle's paint.**

NOTICE

To help prevent damage to the windshield wiper and washer system components, you should take the following precautions:

- **Do not continue to hold in the lever when there is no windshield washer fluid being sprayed or the washer motor can be damaged.**
- **Do not attempt to remove dirt from a dry windshield with the wipers or you can damage the windshield and the wiper blades. Always wet the windshield with washer fluid before operating the wipers.**
- **Clear ice or packed snow from the wiper blades before using the wipers.**
- **Check the washer fluid level regularly. Check it often when the weather is bad.**

Rear Window Wiper

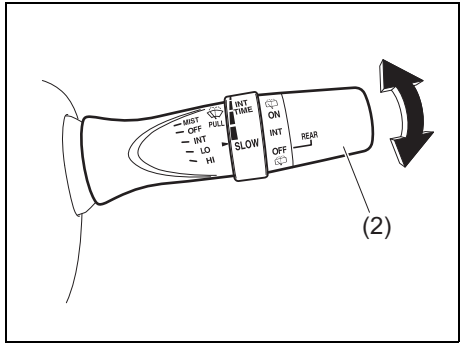

74U030029

You can operate the rear window wiper by twisting the lever (2) as shown in the illustration.

ON	Normal operation
INT (if equipped)	Intermittent operation
OFF	Off

NOTICE

Clear ice or snow from the rear window and rear wiper blade before using the rear wiper. Accumulated ice or snow could prevent the wiper blade from moving, causing damage to the wiper motor.

Rear Window Washer

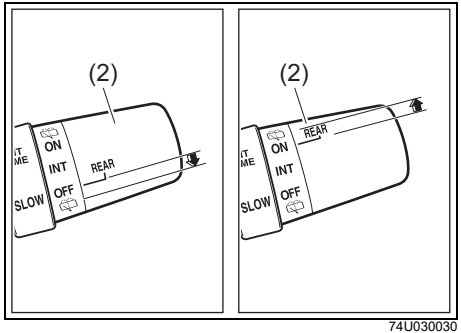

74U030030

- If you twist the lever (2) in the direction of ⬆ and align it to (washer) position above “ON” position, the rear window washer fluid will be sprayed and the rear wiper will operate simultaneously. If you release your hand from the lever, it will return to “ON” position.
- If you twist the lever (2) in the direction of ⬇ and align it to (washer) position below “OFF” position, the rear window washer fluid will be sprayed and the rear wiper will operate simultaneously. If you release your hand from the lever, it will return to “OFF” position.

Horn

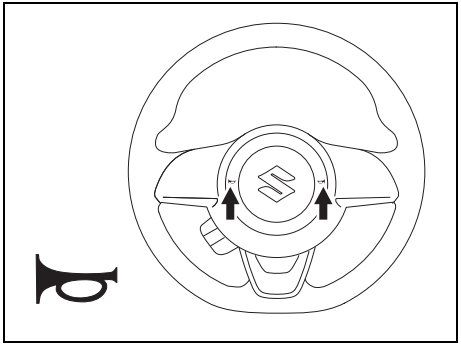

74TBX03039

Press the horn button of the steering wheel to sound the horn. The horn will sound with the ignition switch in any position or any ignition mode.

Heated Rear Window Switch

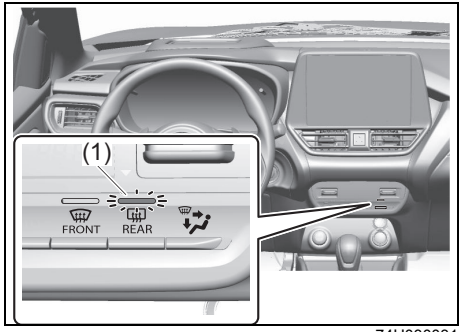

74U030031

While the engine is running or the engine automatically stops by the ENG A-STOP system, you can use the heated rear window switch as the defogger for the rear window glass.
Refer to “ENG A-STOP System (Engine Auto Stop Start System) (if equipped)” in the “OPERATING YOUR VEHICLE” section.

- If you push the rear defogger switch, the rear window glass will be heated and the indicator light (1) will turn on. To turn off the defogger, push the switch again.
- The defogger will automatically turn off after the defogger remains on for 15 minutes to prevent discharging of the lead-acid battery.
- If you turn the ignition switch to “ACC” or “LOCK” position or press the engine switch to change the ignition mode to ACC or LOCK (OFF) with the defogger on, the defogger will not automatically operate even if you start the engine again.

NOTICE
The heated rear window use a large amount of electricity. If you do not turn off the switch after the window have become clear, the battery may run out. To protect the lead-acid battery, turn off the switch shortly after the window have become clear. **Also, do not use the defogger to melt snow or dry rain water.**

NOTE:
- *When you wipe the interior side of the rear window glass, use a soft cloth dampened with water and wipe the glass along the heat wires, not to damage the heat wires and the terminals.*
- *The defogger will work only when the engine is running.*

MEMO

INSTRUMENT CLUSTER

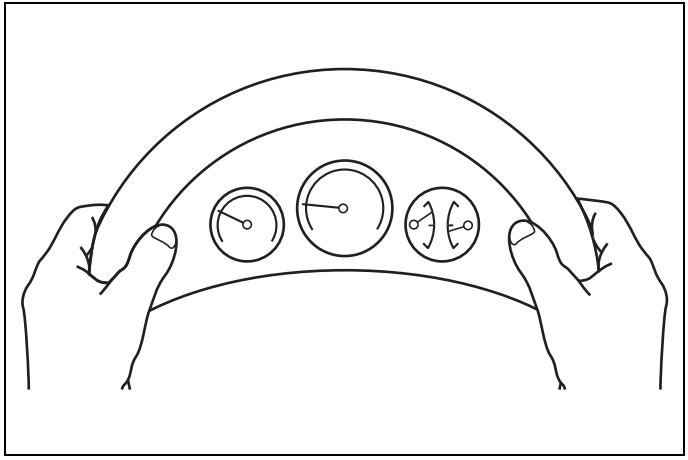

59RN04640

Instrument Cluster (Type A) 4-1
Information Display (Type A) 4-4
Instrument Cluster (Type B) 4-15
Information Display (Type B) 4-19
Warning and Indicator Lights 4-54

Instrument Cluster (Type A)

(1) Speedometer
(2) Tachometer
(3) Information display
(4) Trip meter selector knob
(5) Indicator selector knob
(6) Warning and indicator lights
(7) Fuel gauge
(8) Temperature gauge

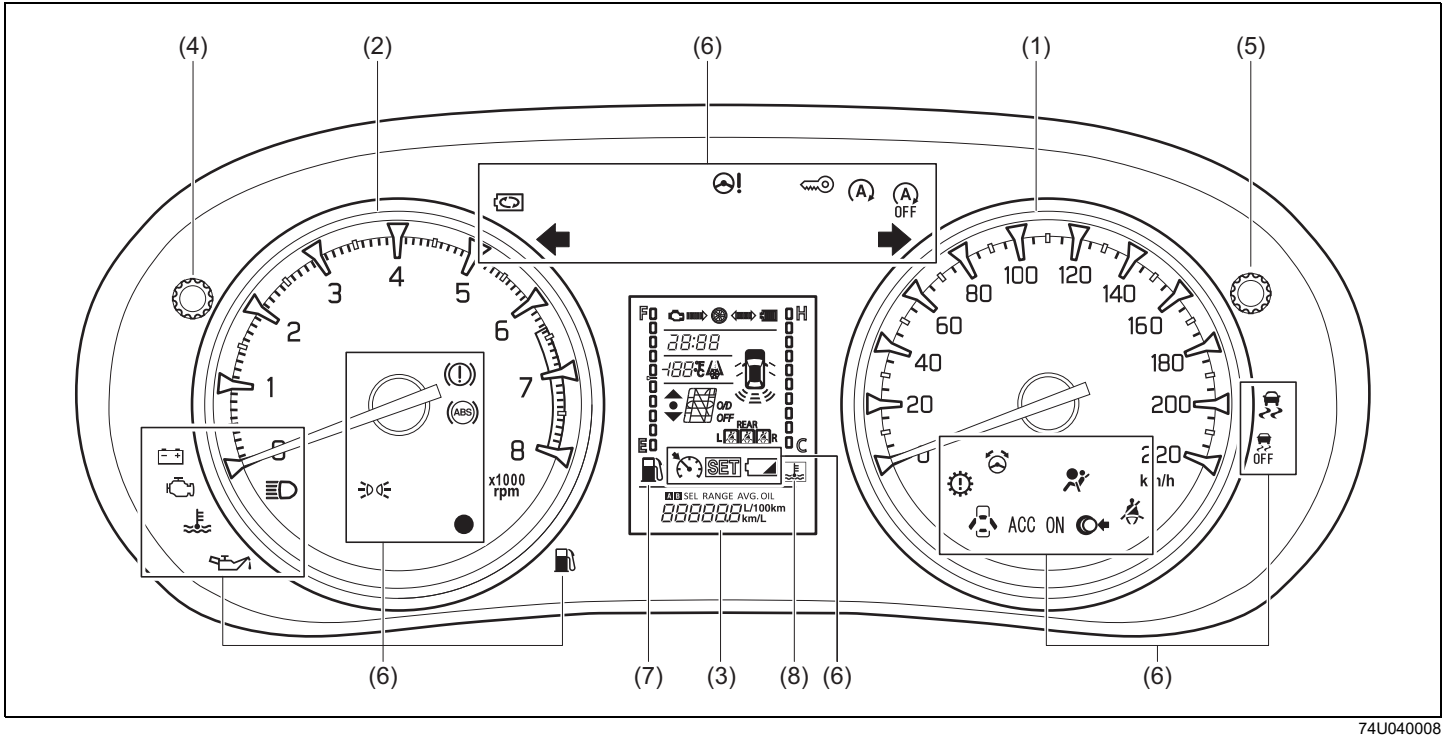

74U040008

Speedometer

The speedometer indicates vehicle speed.

Tachometer

The tachometer indicates engine speed in revolutions per minute.

NOTICE

Never drive the vehicle with the engine revving in the red zone or severe engine damage can result.
Keep the engine speed below the red zone even when downshifting to a lower gear position.
Refer to "Downshifting maximum allowable speeds" in "OPERATING YOUR VEHICLE" section.

Fuel Gauge

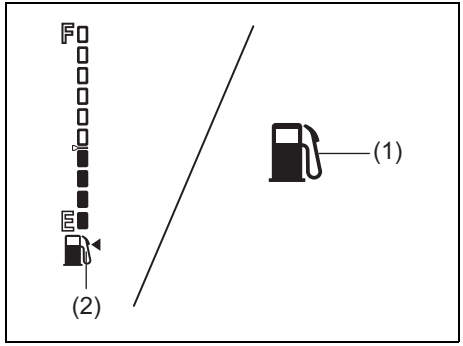

74TBX04068

When the ignition switch is in "ON" position or the ignition mode is ON, this gauge gives a rough indication of the amount of fuel in the fuel tank. "F" stands for full and "E" stands for empty.

If the fuel meter indicator shows only one segment to "E", refill the tank as soon as possible.

NOTE:
If the last segment blinks, it means that the fuel is almost empty.

If the low fuel warning light (1) comes on, refill the fuel tank immediately.

NOTICE

To minimize the possibility of damage to catalytic converter or other components of the vehicle, avoid driving the vehicle near empty fuel tank level.

NOTE:
The activation point of the low fuel warning light (1) varies depending on road conditions (for example, slope or curve) and driving conditions because of fuel movement in the tank.

Refer to “Low Fuel Warning Light” in “Warning and indicator lights” in this section for details.

The mark (2) indicates that the fuel filler door is located on the left side of the vehicle.

Temperature Gauge

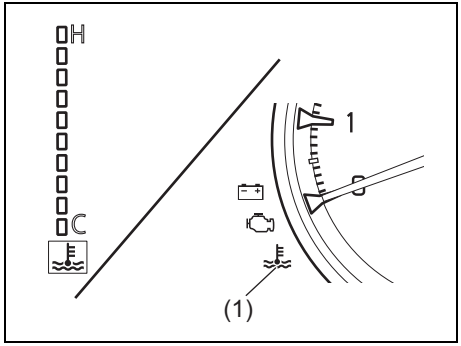

74U040022

When the ignition switch is in “ON” position or the ignition mode is “ON”, this gauge indicates the engine coolant temperature. Under normal driving conditions, the indicator should stay within the normal, acceptable temperature range between “H” and “C”. If the indicator approaches “H”, overheating is indicated. When the engine overheats, the Engine Coolant Temperature Light (1) will be ON. Follow the instructions for engine overheating in “EMERGENCY SERVICE” section

NOTICE

Continuing to drive the vehicle when engine overheating is indicated can result in severe engine damage.

Brightness Control

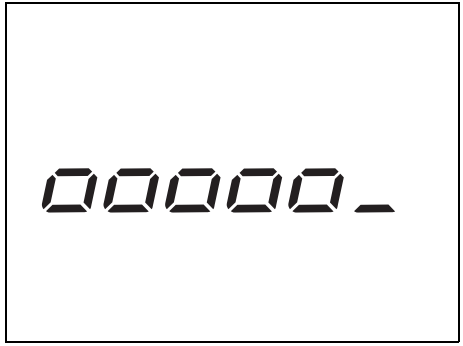

74TBX04006

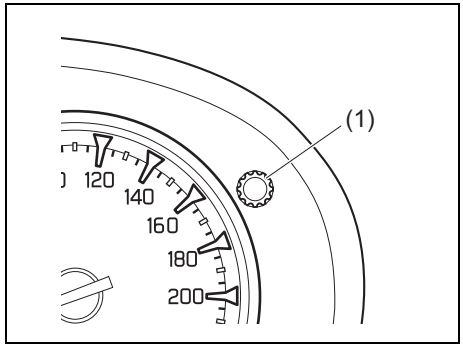

74U040006

When the ignition switch is turned to “ON” position or the engine switch is pressed to change the ignition mode to ON, the instrument panel lights come on.

Your vehicle has a system to automatically dim the brightness of the instrument panel lights when the position lights or headlights are on.

When the position lights and/or headlights are on, you can adjust the meter illumination brightness.

To increase the brightness of the instrument panel lights, turn the indicator selector knob (1) clockwise.

To reduce the brightness of the instrument panel lights, turn the indicator selector knob (1) counterclockwise.

⚠ WARNING

Do not adjust the brightness of the instrument panel lights while driving. Otherwise, you could lose control of the vehicle.

NOTE:
- *If you do not turn the knob within several seconds of activating, the brightness control display will be canceled automatically.*
- *When you reconnect the lead-acid battery, the brightness of the instrument panel lights will be reinitialized. Readjust the brightness according to your preference.*

NOTE:
If you adjust to the maximum brightness level when the position lights or headlights are on, the following functions will be canceled.
- *The function which automatically dims the brightness of instrument panel lights*
- *The function which operates with the brightness control, except maximum brightness level*

Information Display (Type A)

Information display is shown when the ignition switch is turned to “ON” position or the ignition mode is ON.

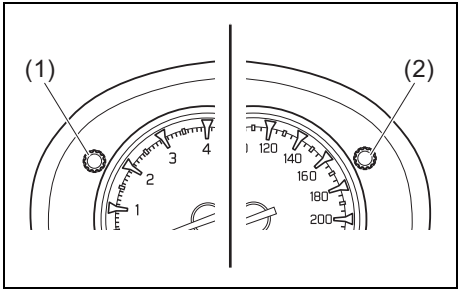

74U040023

(1) Trip meter selector knob
(2) Indicator selector knob

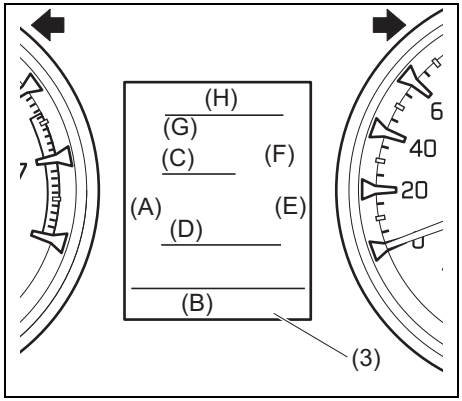

(3) Information display

The information display shows the following information.

Display (A)
Fuel gauge

Display (B)
Trip meter / Odometer / Fuel consumption / Driving range

Display (C)
Thermometer

Display (D)
Selector position (for automatic transmission vehicles) / Gear position (for automatic transmission vehicles)

Display (E)
Temperature gauge

Display (F)
Parking sensor indication and door open indication

Display (G)
Clock

Display (H)
Energy flow (if equipped)

Clock

The display (G) shows the time.

To change the time indication:
1) Push the trip meter selector knob (1) and the indicator selector knob (2) together.
2) To change the hour indication, turn the indicator selector knob (2) left or right repeatedly when the hour indication blinks. To change the hour indication quickly, turn and hold the indicator selector knob (2). To set the hour indication, push the indicator selector knob (2) and the minute indication will blink.
3) To change the minute indication, turn the indicator selector knob (2) left or right repeatedly when the minute indication blinks. To change the minute indication quickly, turn and hold the indicator selector knob (2). To set the minute indication, push the indicator selector knob (2).

To select 12/24H format, refer to “Setting Mode” in this section.

⚠ WARNING

If you attempt to adjust the display while driving, you could lose control of the vehicle.
Do not attempt to adjust the display while driving.

Thermometer

The display (C) shows the thermometer.
The thermometer indicates the outside temperature.

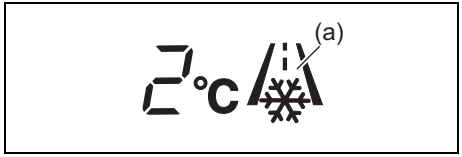

74TBX04010

If the outside temperature drops to freezing condition, the mark (a) will appear on the display.

NOTE:
- *The outside temperature indication is not the actual outside temperature when driving at low speed, or when stopped.*
- *If there is something wrong with the thermometer, or just after the ignition switch is turned to "ON" position or the engine switch is pressed to change the ignition mode to ON, the display may not indicate the outside temperature.*

When the display (B) shows the driving range, you can change the unit of temperature.

To change the unit of temperature, while pushing and holding the trip meter selector knob (1), turn the indicator selector knob (2).

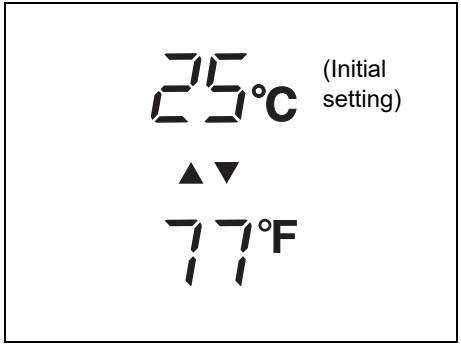

74TBX04011

Selector position (for Automatic Transmission vehicles) / Gear position (for Automatic transmission vehicles)

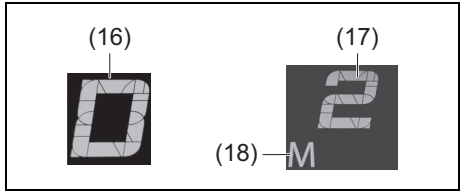

74TBX04012

Selector position (for automatic transmission vehicles) /
Gear position (for automatic transmission vehicles)
The display (D) shows the transmission selector position (16) or the gear position (17).
- When the manual mode is not in use, the display shows the selector position.
- When using the manual mode, the display shows the current gear position.

For details on how to use the transmission, refer to "Using Transmission" in "OPERATING YOUR VEHICLE" section.

Manual mode indicator
(for automatic transmission vehicles)
When you are using the manual mode, the display shows the manual mode indicator (18).

Trip Meter / Odometer / Fuel Consumption / Driving Range

The display (B) shows one of the following indications; trip meter A, trip meter B, odometer, instantaneous fuel consumption, average fuel consumption or driving range.

To switch the display indication (B), push the trip meter selector knob (1) or the indicator selector knob (2) quickly.

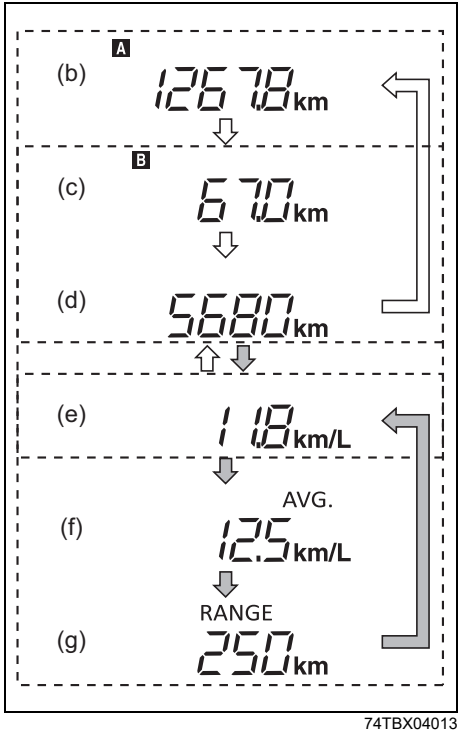

74TBX04013

⇧⇩	Push the trip meter selector knob (1).
⇧⇩	Push the indicator selector knob (2).

(b) Trip meter A
(c) Trip meter B
(d) Odometer
(e) Instantaneous fuel consumption
(f) Average fuel consumption
(g) Driving range

⚠ WARNING

If you attempt to adjust the display while driving, you could lose control of the vehicle.
Do not attempt to adjust the display while driving.

NOTE:
- *Indications will change when you push and release a knob.*
- *The display shows estimated values. Indications may not be the same as actual values.*

Trip meter
The trip meter can be used to measure the distance traveled on short trips or between fuel stops.
You can use the trip meter A or trip meter B independently.

To reset the trip meter, push and hold the trip meter selector knob (1) until the display shows 0.0.

NOTE:
The indicated maximum value of the trip meter is 9999.9. When you run past the maximum value, the indicated value will return to 0.0.

Odometer
The odometer records the total distance the vehicle has been driven.

NOTICE
Keep track of your odometer reading and check the maintenance schedule regularly for required services. Increased wear or damage to certain parts can result from failure to perform required services at the proper mileage intervals.

Instantaneous fuel consumption
The display shows the value of instantaneous fuel consumption only when the vehicle is moving.

NOTE:
- *The display does not show the value unless the vehicle is moving.*
- *Depending on the vehicle's specification, the fuel consumption units of initial setting are indicated as L/100km, km/L or MPG.*
- *For "L/100km" setting, the indicated maximum value of instantaneous fuel consumption is 30. No more than 30 will be indicated on the display even if the actual instantaneous fuel consumption is higher.*
- *For "km/L" setting, the indicated maximum value of instantaneous fuel consumption is 50. No more than 50 will be indicated on the display even if the actual instantaneous fuel consumption is higher.*
- *The indication on the display may be delayed if fuel consumption is greatly affected by driving conditions.*
- *The display shows estimated values. Indications may not be the same as actual values.*
- *For "L/100km" or "km/L" setting, you can change the units that instantaneous fuel consumption is displayed in. Refer to "Average fuel consumption" in this section.*

Average fuel consumption
If you selected average fuel consumption the last time you drove the vehicle, the display shows the last value of average fuel consumption from previous driving when the ignition switch is turned to "ON" position or the engine switch is pressed to change the ignition mode to ON. Unless you reset the value of average fuel consumption, the display indicates the value of average fuel consumption which includes average fuel consumption during previous driving.

To reset the average fuel consumption, push and hold the indicator selector knob (2) for a while when the display shows the average fuel consumption.

NOTE:
When you reset the indication or reconnect the negative (–) terminal to the lead-acid battery, the value of average fuel consumption will be shown after driving for a while.

(For "L/100km" or "km/L" setting)
To change the unit of average fuel consumption, while pushing and holding the trip meter selector knob (1), turn the indicator selector knob (2).

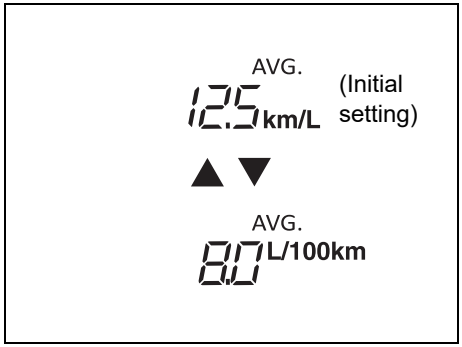

74TBX04014

NOTE:
When you change the units that average fuel consumption is displayed in, the instantaneous fuel consumption units will be changed automatically.

Driving range
If you selected driving range the last time you drove the vehicle, the display indicates "---" for a few seconds and then indicates the current driving range when the ignition switch is turned to "ON" position or the engine switch is pressed to change the ignition mode to ON.

The driving range shown in the display is an indicative unit of the approximate distance you can drive until the fuel gauge indicates "E", based on current driving conditions and current fuel level in the fuel tank.

When the low fuel warning light comes on, the display "---" will appear.

If the low fuel warning light comes on, fill the fuel tank immediately regardless of the value of driving range shown in the display.

When you refuel, the driving range is updated. However, if you only add a small amount of fuel, the correct value will not be displayed.

NOTE:
- *If you refuel when the ignition switch is in "ON" position or the ignition mode is ON, the driving range may not indicate the correct value.*
- *When you reconnect the negative (–) terminal to the lead-acid battery, the value of driving range will be shown after driving for a while.*
- *If there are substantial changes in the driving pattern or vehicle usage, the displayed range may vary significantly.*

Fuel Gauge

The display (A) shows the fuel gauge.

Refer to "Fuel Gauge" in this section.

Parking Sensor Indication and Door Open Indication

The display (F) shows the parking sensor indication and door open display indication.
Individual door and tail gate is indicated when the respective door or tail gate is not closed properly.
Refer to "Parking Sensor" in the "OPERATING YOUR VEHICLE" section.

Energy flow (if equipped)

The state of SHVS operation can be checked on the information display. For details, refer to “SHVS (Smart Hybrid Vehicle by Suzuki) (if equipped)” in “OPERATING YOUR VEHICLE” section.

Information display	Description
 66T040080	When the vehicle is running, ISG (Integrated Starter Generator) assists engine power as an electric motor
 66T040090	When the vehicle is powered by the engine
 66T040100	When decelerating your vehicle, the ISG generates electricity without engine power
 66T040110	When the engine automatically stops by the ENG A-STOP system

Setting Mode

In the setting mode, you can set up and customize the following functions.

Indication	Functions
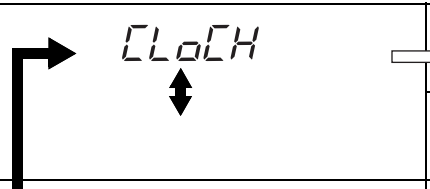	12-hour format " CL - 12h " 24-hour format " CL -24h "
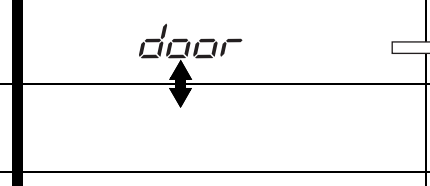	Central door locking system "d1" Enables and Disables the exterior buzzer answer back "d5" (if equipped)
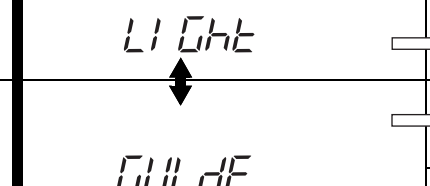	Additional flashes of the turn signal "L2"
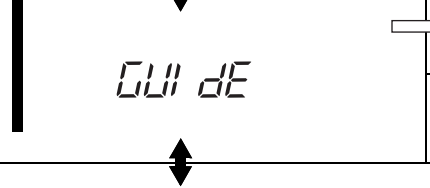	Lighting time of the "To car" function "G1" Lighting time of the "To home" function "G2"

Indication	Functions
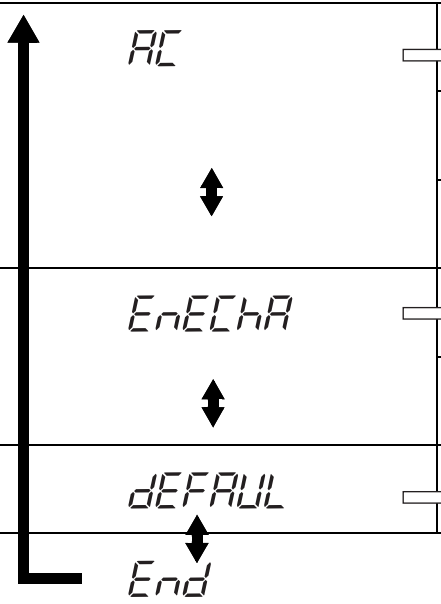	“Normal” engine auto stop setting for Auto A/C operation “norMAL”
	“Economy” engine auto stop setting for Auto A/C operation “ ECo ”
	“Comfort” engine auto stop setting for Auto A/C operation “CoMF ”
	Enable the deceleration energy regenerating indicator light “En- on”
	Disable the deceleration energy regenerating indicator light “ En-oFF ”
	Initialization setting “dE-on”
	Exit the setting mode “End”

⇕	Turn the indicator selector knob (2).
⇨	Push the indicator selector knob (2).

NOTE:
Depending on vehicle's specifications, some items may not be displayed.

How to use the setting mode:
1) When the ignition switch is in "ON" position or the ignition mode is ON, and the vehicle is stationary.
2) Push and hold the indicator selector knob (2) until the display shows "CLOCK".
3) Turn and/or push the indicator selector knob (2) to select a function that you want to set up according to the chart in the previous page.
4) Turn and/or push the indicator selector knob (2) to register settings of the following functions.

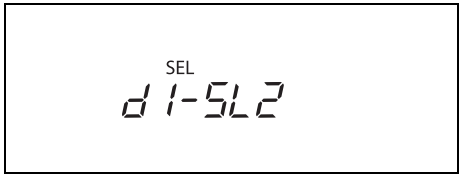

74TBX04015

NOTE:
- *As shown in the above illustration, "SEL" indicates on the display of currently setting item.*
- *To go back to the higher level display during operation, turn the indicator selector knob (2) to display "BACK" or "-BAC" and then push the indicator selector knob (2).*

Time indication of clock "CL"
- CL-12h: 12-hour format (default setting)
- CL-24h: 24-hour format

Central door locking system "d1"
- d1-SL1: Unlock all doors by turning the key once
- d1-SL2: Unlock all doors by turning the key twice (default setting)

Door locking and unlocking buzzer "d4"(if equipped)
- d4-SL1: Buzzer sounds when the doors (including the tailgate) are locked or unlocked by using the keyless push start system remote controller or request switch (default setting)
- d4-SL2: Buzzer does not sound when the doors (including the tailgate) are locked or unlocked by using the keyless push start system remote controller or request switch

Additional flashes of the turn signal "L2"
- L2-SL1: Turn signal flashes three times after the turn signal lever is returned (default setting)
- L2-SL2: Disable the additional flashes of turn signal

Lighting time of the "To car" function "G1"
- G1-SL1: Disable the "To car" function
- G1-SL2: 10 seconds (default setting)
- G1-SL3: 15 seconds
- G1-SL4: 20 seconds
- G1-SL5: 25 seconds

Lighting time of the "To home" function "G2"
- G2-SL1: Disable the "To home" function
- G2-SL2: 10 seconds (default setting)
- G2-SL3: 15 seconds
- G2-SL4: 20 seconds
- G2-SL5: 25 seconds
- G2-SL6: 30 seconds

Engine auto stop setting for Auto A/C " AC " (if equipped)
- norMAL : Set engine auto stop condition occurrence frequency in between that of "economy" and "comfort" (default setting)
- ECo : When "economy" is selected, engine auto stop condition is eased, compared with "normal". As engine auto stop condition will occur more frequently, the stop time will be longer, leading to reduction of fuel consumption.

CoMF : When "comfort" is selected, engine auto stop condition becomes severe, compared with "normal". As engine auto stop condition will occur less frequently, the stop time will be shorter, leading to more comfortable cabin condition by air conditioner.

Deceleration energy regenerating indicator light setting " EnECHA " (if equipped)
- En- on : Enable the deceleration energy regenerating indicator light
- En-oFF : Disable the deceleration energy regenerating indicator light

Initialization setting " dE-on "
dE-on : Initialize all settings
Initialization setting "dE-on"
- dE-on: Initialize all settings

How to exit the setting mode:
Switch the display to show "End" and then push the indicator selector knob (2).

Instrument Cluster (Type B)

1. Speedometer
2. Tachometer
3. Fuel gauge
4. Temperature gauge
5. Information display
6. Trip meter selector knob
7. Indicator selector knob
8. Warning and indicator lights

Without DSBS II

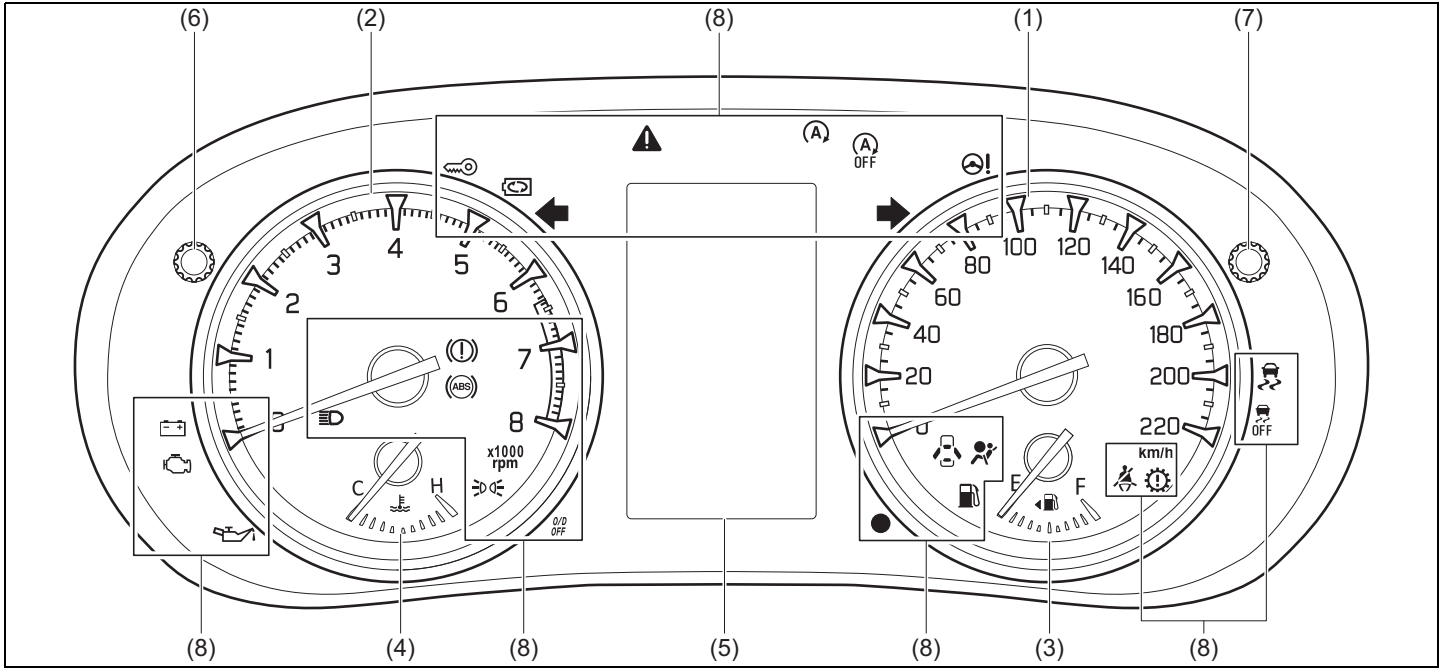

74U040009

With DSBS II

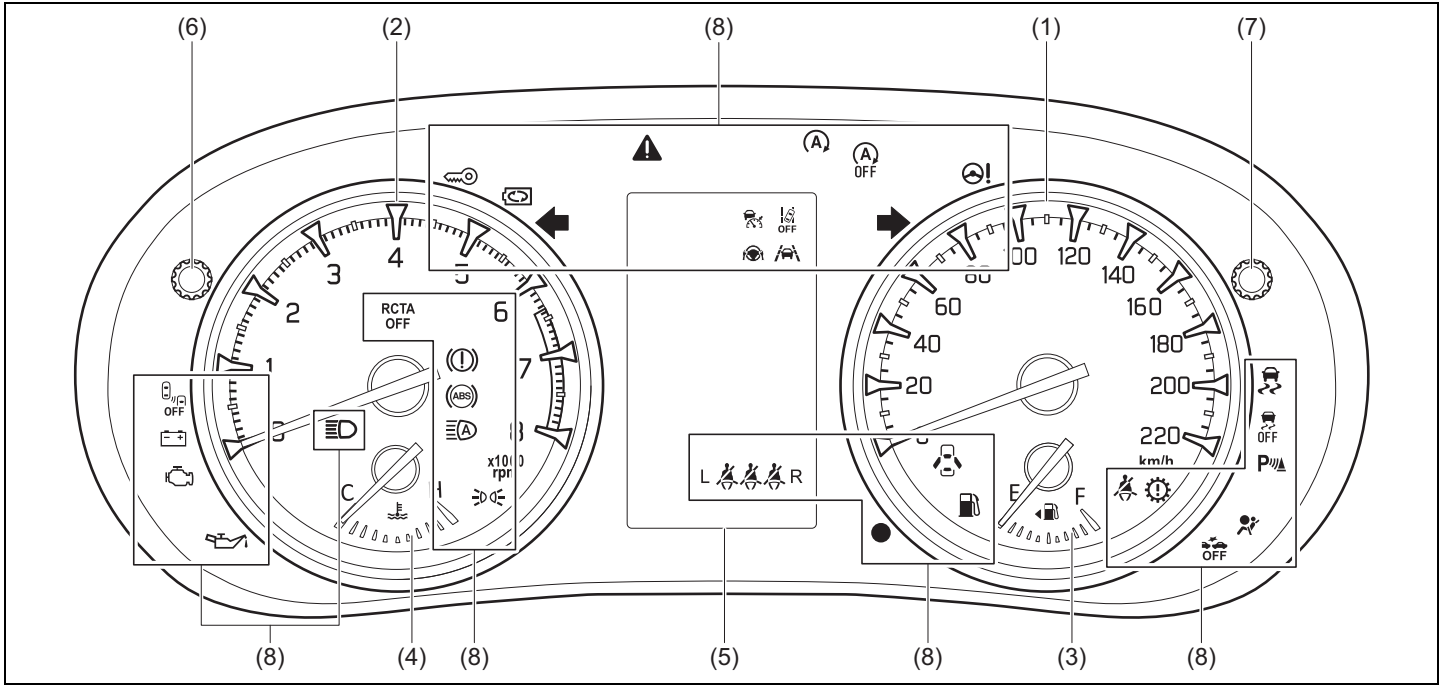

74U040010

Speedometer

The speedometer indicates vehicle speed.

Tachometer

The tachometer indicates engine speed in revolutions per minute.

NOTICE

Never drive the vehicle with the engine revving in the red zone or severe engine damage can result.
Keep the engine speed below the red zone even when downshifting to a lower gear position.
Refer to "Downshifting maximum allowable speeds" in "OPERATING YOUR VEHICLE" section.

Fuel Gauge

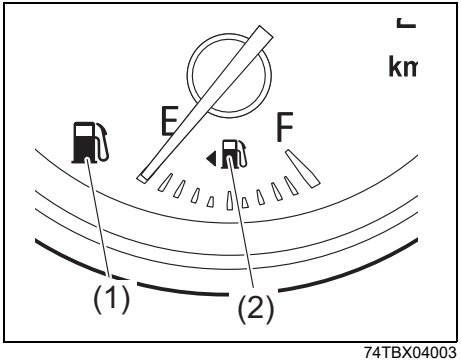

74TBX04003

When the ignition mode is ON, this gauge gives a rough indication of the amount of fuel in the fuel tank. "F" stands for full and "E" stands for empty.

If the indicator approaches a low level (near "E") on fuel gauge, refill the tank as soon as possible.

NOTE:
The indicator moves a little depending on road conditions (for example, slope or curve) and driving conditions because of fuel movement in the tank.

If the low fuel warning light (1) comes on, refill the fuel tank as soon as possible.

NOTICE

To minimize the possibility of damage to catalytic converter or other components of the vehicle, avoid driving the vehicle near empty fuel tank level.

NOTE:
The activation point of the low fuel warning light (1) varies depending on road conditions (for example, slope or curve) and driving conditions because of fuel movement in the tank.

Refer to “Low Fuel Warning Light” in “Warning and Indicator Lights” in this section for details.

The mark (2) indicates that the fuel filler door is located on the left side of the vehicle.

Temperature Gauge

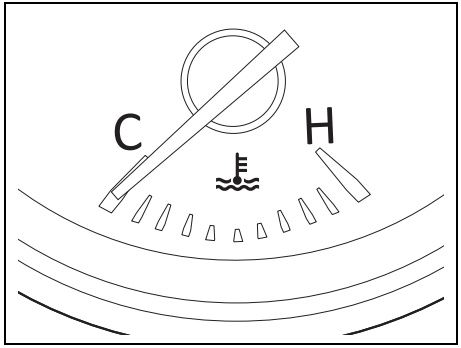

74U040012

When the ignition mode is ON, this gauge indicates the engine coolant temperature. Under normal driving conditions, the indicator should stay within the normal, acceptable temperature range between “H” and “C”. If the indicator approaches “H”, overheating is indicated. Follow the instructions for “Engine Trouble: Overheating” in “EMERGENCY SERVICE” section.

NOTICE

Continuing to drive the vehicle when engine overheating is indicated can result in severe engine damage.

Brightness Control

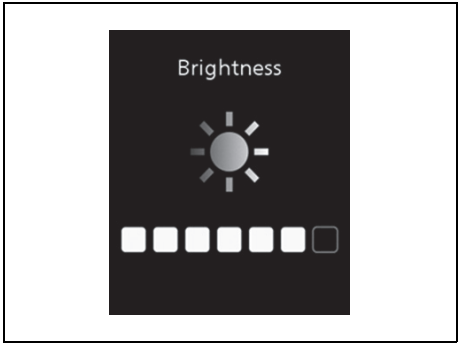

74TBX04016

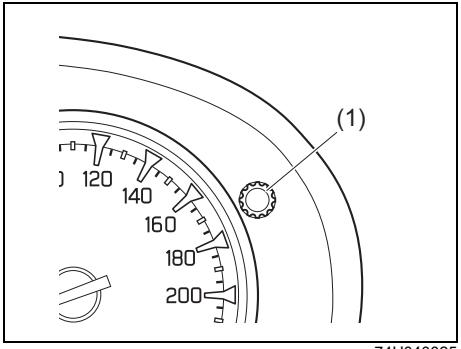

74U040025

When the ignition mode is ON, the instrument panel lights come on.

Your vehicle has a system to automatically dim the brightness of the instrument panel lights when the position lights or headlights are on.

When the position lights and/or headlights are on, you can adjust the meter illumination brightness.

To increase the brightness of the instrument panel lights, turn the indicator selector knob (1) clockwise.

To reduce the brightness of the instrument panel lights, turn the indicator selector knob (1) counterclockwise.

⚠ WARNING

Do not adjust the brightness of the instrument panel lights while driving. Otherwise, you could lose control of the vehicle.

NOTE:
- *If you do not turn the knob within several seconds of activating, the brightness control display will be cancelled automatically.*
- *When you reconnect the lead-acid battery, the brightness of the instrument panel lights will be reinitialized. Readjust the brightness according to your preference.*

NOTE:
If you adjust to the maximum brightness level when the position lights or headlights are on, the following functions will be canceled.
- *The function which automatically dims the brightness of instrument panel lights*
- *The function which operates with the brightness control, except maximum brightness level*

Information Display (Type B)

The information display is shown when the ignition mode is “ON”.

Without DSBS II

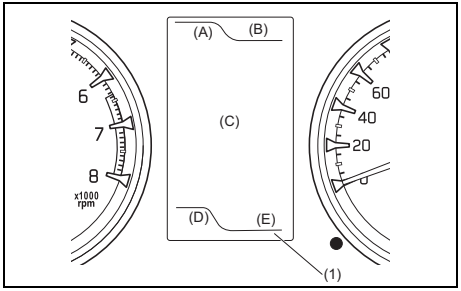

74U040013

With DSBS II

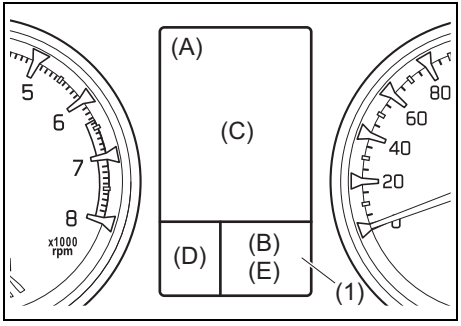

74U040014

1) Information display

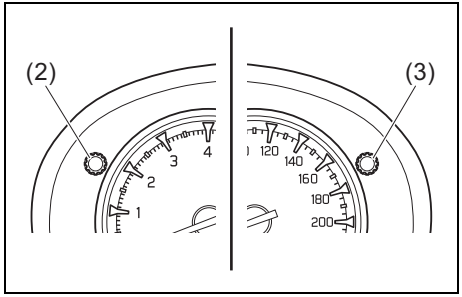

74U040026

(2) Trip meter selector knob
(3) Indicator selector knob

The information display shows the following information.

Display (A)
Clock

Display (B)
Thermometer

Display (C)
Warning and indicator messages / Fuel consumption / Driving range / /Average Speed / Driving time / Total idling stop time and Total idling fuel saved / Clock and date / Motion / Torque and power / Accelerator and brake / Cruise control (Without DSBS II)/ Energy flow / Vehicle speed (With DSBS II) / Intersection guidance / Adaptive cruise control (With DSBS II) / SUZUKI SAFETY SUPPORT image and message (With DSBS II)

Display (D)
Selector position (for automatic transmission vehicles) / Gear position (for automatic transmission vehicles)

Display (E)
Odometer / Trip meter

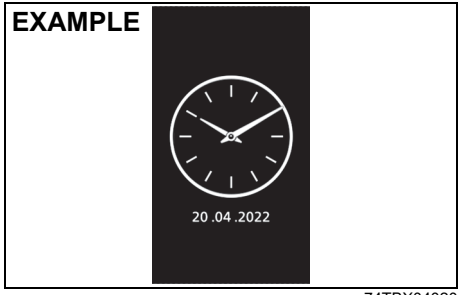

74TBX04020

When the engine switch is pressed to change the ignition mode to ON, the message display shown in the above illustration will appear on the display for several seconds.
Some warning and indicator messages may appear on the display when the ignition mode is ACC or LOCK (OFF).

Clock

The display (A) shows the time.

To set the clock, follow “Setting Mode” instructions in this section.

⚠ WARNING

If you attempt to adjust the display while driving, you could lose control of the vehicle.
Do not attempt to adjust the display while driving.

Thermometer (if equipped)

The display (B) shows the thermometer.

The thermometer indicates the outside temperature.

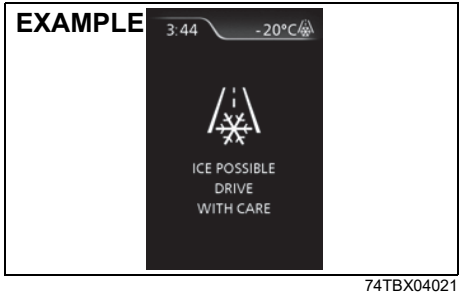

74TBX04021

If the outside temperature nears freezing condition, the message shown in the above illustration will appear on the display.

To change the temperature unit between "°C" and "°F", follow "Setting Mode" instructions in this section.

NOTE:

- *The outside temperature indication is not the actual outside temperature when driving at low speed, or when stopped.*
- *If there is something wrong with the thermometer, or just after the ignition switch is pushed to "ON" mode, the display may not indicate the outside temperature.*

Fuel Consumption / Driving Range / Average Speed / Driving Time / Total Idling Stop Time and Total Idling Fuel Saved / Clock and Date / Motion / Torque and Power / Accelerator and Brake / Energy flow/ Vehicle speed (With DSBS II)

When there are no warning or indicator messages on the display (C), you can select one of the following indications to appear on the display: instantaneous fuel consumption, average fuel consumption, driving range, average speed, driving time, total idling stop time and total idling fuel saved, clock and date, motion, torque and power, accelerator and brake, energy flow, vehicle speed (With DSBS II) or no indication (or SUZUKI SAFETY SUPPORT image and message).

⚠ WARNING

If you attempt to adjust the display while driving, you could lose control of the vehicle. Do not attempt to adjust the display while driving.

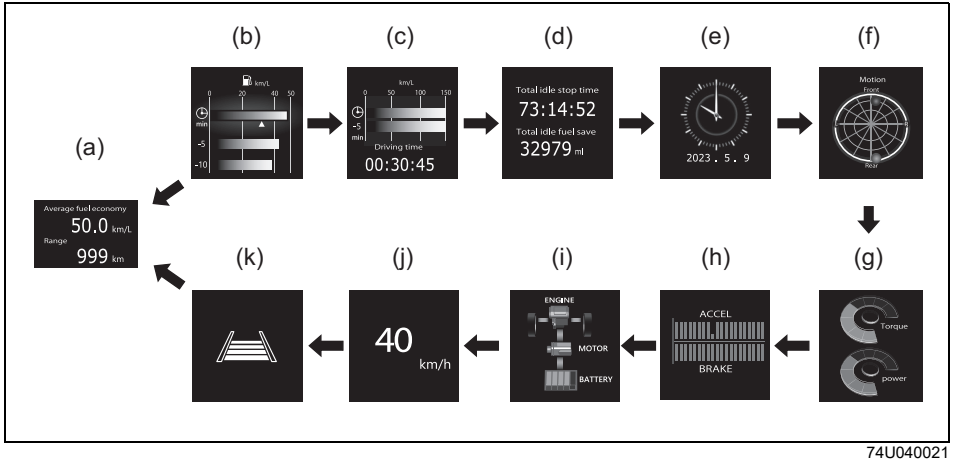

74U040021

(a) Instantaneous fuel consumption / Average fuel consumption / Driving range
(b) Instantaneous fuel consumption / Average fuel consumption / 5-minute average fuel consumption
(c) Average speed / 5-minute average speed / Driving time
(d) Total idling stop time and total idling fuel saved
(e) Clock and date
(f) Motion
(g) Torque and power
(h) Accelerator and brake
(i) Energy flow
(j) Vehicle speed (With DSBS II)
(k) No indication or SUZUKI SAFETY SUPPORT image and message (With DSBS II)

To switch the display indication, push the indicator selector knob (3) quickly.

NOTE:
The value of instantaneous fuel consumption, average fuel consumption, driving range, average speed, total idling fuel saved, motion, torque and power, accelerator and brake and energy flow shown on the display are affected by the following conditions;
- *road condition*
- *surrounding traffic condition*
- *driving condition*
- *vehicle condition*
- *a malfunction which causes the malfunction indicator light to come on or blink*

Instantaneous fuel consumption
The display shows instantaneous fuel consumption with a bar graph only when the vehicle is moving.

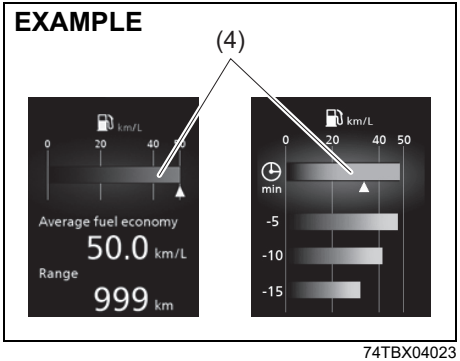

74TBX04023

(4) Instantaneous fuel consumption

NOTE:
- *The display does not show the bar graph unless the vehicle is moving.*
- *Depending on the vehicle's specification, the fuel consumption units of initial setting are indicated as L/100km, km/L or MPG.*
- *For "L/100km" setting, the indicated maximum value of instantaneous fuel consumption is 30. No more than 30 will be indicated on the display even if the actual instantaneous fuel consumption is higher.*
- *For "km/L" setting, the indicated maximum value of instantaneous fuel consumption is 50. No more than 50 will be indicated on the display even if the actual instantaneous fuel consumption is higher.*
- *For "MPG(UK)" setting, the indicated maximum value of instantaneous fuel consumption is 80. No more than 80 will be indicated on the display even if the actual instantaneous fuel consumption is higher.*
- *The indication on the display may be delayed if fuel consumption is greatly affected by driving conditions.*
- *The display shows estimated values. Indications may not be the same as actual values.*

Average fuel consumption / 5-minute average fuel consumption / 1-driving cycle average fuel consumption
Average fuel consumption from previous reset and 5-minute average fuel consumption, and 1-driving cycle average fuel consumption are shown.

(Average fuel consumption)

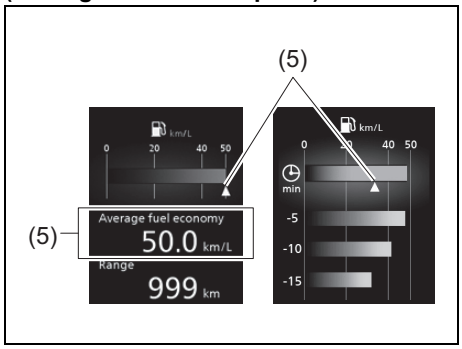

74TBX04024

(5) Average fuel consumption

If you selected average fuel consumption the last time you drove the vehicle, the display shows the last value of average fuel consumption from previous driving when the engine switch is pressed to change the ignition mode to ON. Unless you reset the value of average fuel consumption, the display indicates the value of average fuel consumption based on the average fuel consumption during previous driving.

NOTE:
When you reconnect the negative (–) terminal to the lead-acid battery, the value of average fuel consumption will be shown after driving for a period of time.

You can select the timing to reset the value of average fuel consumption by one of the following three methods;

- Reset after refuel: the value of average fuel consumption will be reset automatically by refueling.
- Reset with trip meter A: the value of average fuel consumption will be reset automatically by resetting trip meter A.
- Reset manually: the value of average fuel consumption will be reset by pushing and holding the indicator selector knob (3) when the display indicates the average fuel consumption.

To change the timing to reset the value of average fuel consumption, refer to “Setting Mode” in this section.

NOTE:
If you add only a small amount of fuel when you select “Reset after refuel”, the average fuel consumption value may not be reset.

(5-minute average fuel consumption)

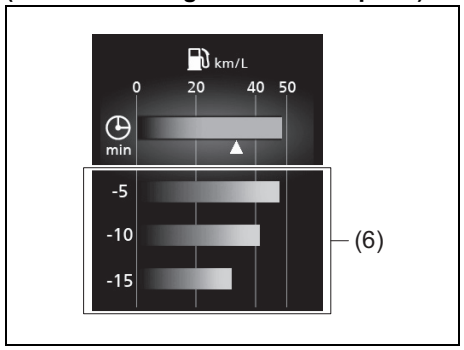

74TBX04025

(6) 5-minute average fuel consumption

(1-driving cycle average fuel consumption)

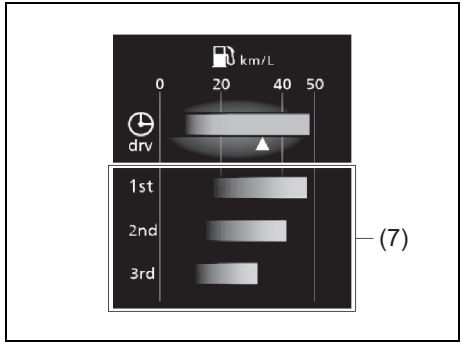

74TBX04026

(7) 1-driving cycle average fuel consumption

You can check transition of average fuel consumption every 5 minutes from 15 minutes before up to now. Also, you can check transition of average fuel consumption the past 3 driving cycles. Time indication and driving cycle indication can be changed. For details, refer to “Setting Mode” in this section.

Driving range

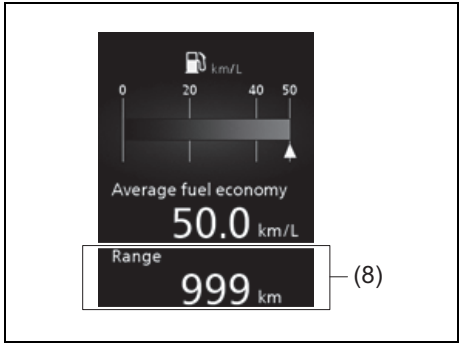

74TBX04027

(8) Driving range

If you selected driving range the last time you drove the vehicle, the display indicates “---” for a few seconds and then indicates the current driving range when the engine switch is pressed to change the ignition mode to ON.

The driving range shown in the display is an indicative unit of the approximate distance you can drive until the fuel gauge indicates “E”, based on current driving conditions and current fuel level in the fuel tank.

When the low fuel warning light comes on, the display “---” will appear.
If the low fuel warning light comes on, fill the fuel tank immediately regardless of the value of driving range shown in the display.

When you refuel, the driving range is updated. However, if you only add a small amount of fuel, the correct value will not be displayed.

NOTE:

- *If you refuel when the ignition mode is “ON”, the driving range may not indicate the correct value.*
- *When you reconnect the negative (–) terminal to the lead-acid battery, the value of driving range will be shown after driving for a period of time.*
- *If there are substantial changes in the driving pattern or vehicle usage, the displayed range may vary significantly.*

Average speed / 5-minute average speed

Average speed from previous reset and 5-minute average speed are shown.

(Average speed)

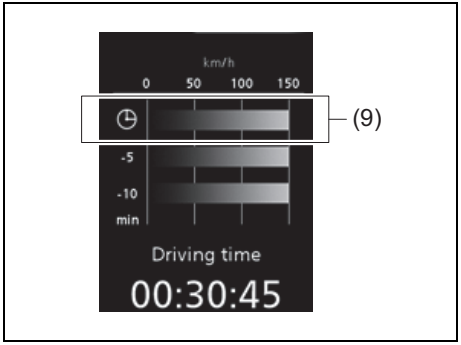

74TBX04028

(9) Average speed

If you selected average speed the last time you drove the vehicle, the display indicates the last value of average speed from previous driving when the engine switch is pressed to change the ignition mode to ON. Unless you reset the value of average speed, the display indicates the value of average speed which includes average speed during previous driving.

To reset the value of average speed, push and hold the indicator selector knob (3) for about 2 seconds when the display indicates an average speed. The display

shows "---" and then indicates a new average speed after driving for a short time.

NOTE:
When you reconnect the negative (–) terminal to the lead-acid battery, the value of average speed will be shown after driving for a period of time.

(5-minute average speed)

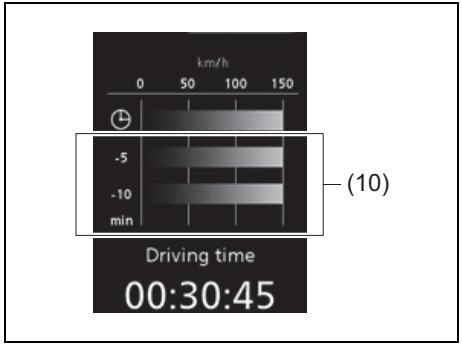

74TBX04029

(10) 5-minute average speed

You can check transition of 5-minute average speed every 5 minutes from 10 minutes before up to now.

Driving time

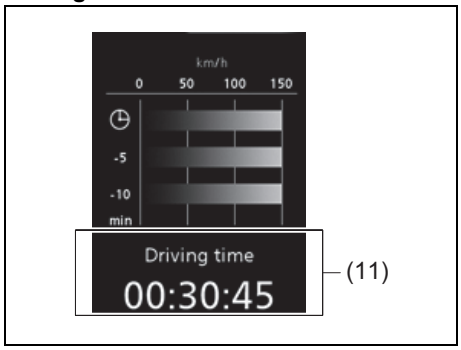

74TBX04030

(11) Driving time

Driving time from previous reset is shown. To reset the driving time, push and hold the indicator selector knob (3) for about 2 seconds when the display indicates a driving time. The display shows "---" and then indicates a new driving time after driving for a short time.

NOTE:
- *Disconnection of the lead-acid battery negative (-) terminal will reset the indication of the driving time.*
- *The indicated maximum value of driving time is 99:59:59. No more than this value will be indicated on the display until you reset the driving time.*

Total idling stop time and total idling fuel saved

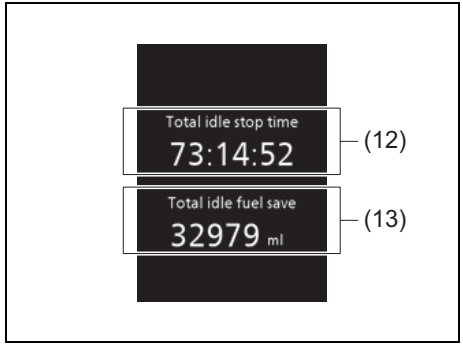

74TBX04031

(12) Total idling stop time
(13) Total idling fuel saved

The display shows the total length (in hours, minutes and seconds) of engine stopping time and the total amount (in milliliters) of fuel conservation by ENG A-STOP system since the indication was reset.

- To reset the total idling stop time and the total idling fuel saved, push and hold the indicator selector knob (3) for a while when the display shows the total idling stop time and the total idling fuel saved.

NOTE:
- *The indicated maximum value of the total idling stop time is 99:59:59 and this value is fixed until it is reset.*
- *When you reconnect the negative (–) terminal to the lead-acid battery, the value of the total idling stop time and the total idling fuel saved will be reset.*

Clock and date

Date and time are shown. For the setting procedure, refer to “Setting Mode” in this section.

Motion

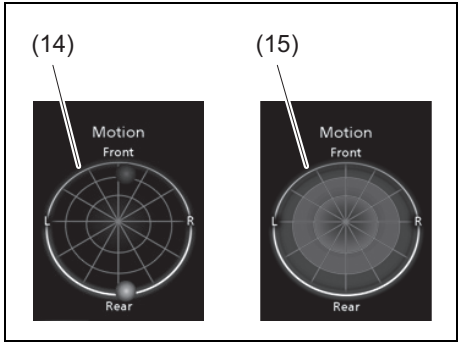

74TBX04032

The meter indication is different depending on whether the vehicle is stopped or running.
G (acceleration of gravity) position applied to the vehicle body while driving is shown by a globe (14).
When the vehicle is stopped, historical data of G positions applied to the vehicle body during the driving is shown as a graph (15).

G position history graph at the vehicle stopped can be changed to indicate or hide. For details, refer to “Setting Mode” in this section.

⚠ WARNING

Do not look in the display intensively while driving. Doing so may result in an unexpected accident.

NOTE:
- *If G position history graph at the vehicle stopped has been set in indication mode, the graph (15) is shown for several seconds when you turn the ignition mode to LOCK (OFF) after driving.*
- *The graph is shown approximately and the actual movement may differ.*

Torque and power

Present engine torque and power are shown.

Accelerator and brake

Present accelerator pedal depressing degree and brake line pressure are shown. The display is selectable to indicate or not to indicate. For details, refer to “Setting Mode” in this section.

Energy flow
The state of Smart Hybrid operation can be checked on the information display. For details, refer to “SHVS (Smart Hybrid Vehicle by Suzuki) (if equipped)” in “OPERATING YOUR VEHICLE” section.

Information display		Description
Without DSBS II	With DSBS II	
 74U040016	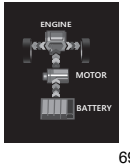 69T040460	When the vehicle is running, ISG (Integrated Starter Generator) assists engine power as an electric motor.
 74U040017	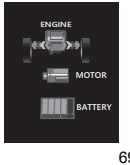 69T040470	When the vehicle is powered by the engine.
 74U040018	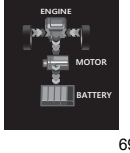 69T040490	When decelerating your vehicle, the ISG generates electricity without engine power.
 74U040019	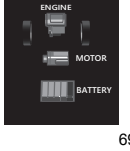 69T040480	When the engine automatically stops by the ENG A-STOP system.

Vehicle speed (With DSBS II)

Vehicle speed is shown.
You can change the unit of velocity that vehicle speed is displayed in. For details, refer to “Setting Mode” in this section.

NOTE:
Displayed vehicle speed may differ a little from the speed meter indication.

Information shown after driving

When you press the engine switch to change the ignition mode to LOCK (OFF) the following information appears for several seconds on the information display.

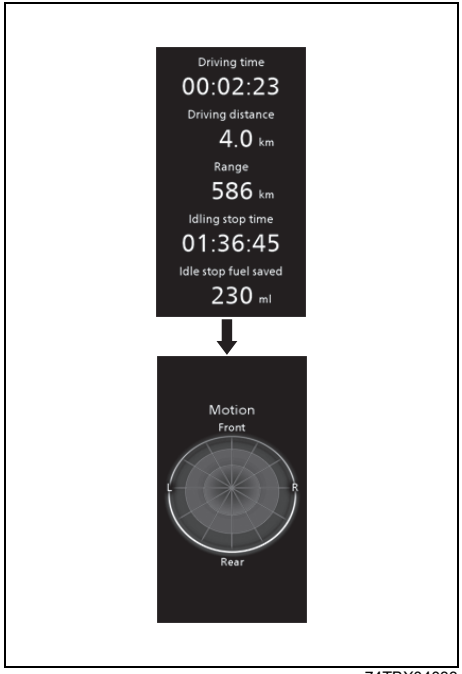

74TBX04033

Intersection Guidance (When using Android Auto™*1 or Apple CarPlay*2 on infotainment system)

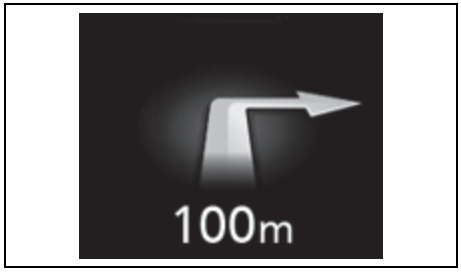

74TBX04034

The display shows the direction of your driving and the distance, working with the infotainment system.

NOTE:

- *A slight time lag may occur between the intersection guidance on the information display and the guidance from the infotainment system.*
- *Switch the intersection guidance to ON or OFF while the guidance from the infotainment system is displayed.*
  - *A time lag may occur between ON display and OFF display of the intersection guidance.*
  - *For the functions and operations of the infotainment system, refer to the supplementary manual, provided along with it.*
- *You can display or hide the intersection guidance by changing the setting (customization). For details, refer to "Setting Mode" in this section.*

*1: Android Auto™ may not be available in your country or region.
For details about Android Auto™, refer to http://support.google.com/androidauto

*2: Apple CarPlay may not be available in your country or region.
For details about Apple CarPlay, refer to https://www.apple.com/ios/carplay/

Selector position (for automatic transmission vehicles) / Gear position (for automatic transmission vehicles)

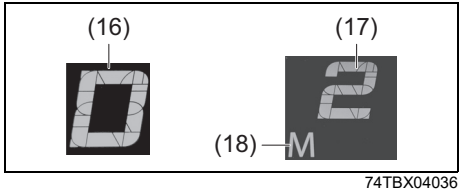

74TBX04036

Selector position (for automatic transmission vehicles) /
Gear position (for automatic transmission vehicles)
The display shows the transmission selector position (16) or the gear position (17).

- When the manual mode is not in use, the display shows the selector position.
- When using the manual mode, the display shows the current gear position.

For details on how to use the transmission, refer to “Using Transmission” in “OPERATING YOUR VEHICLE” section.

NOTE:
For vehicle equipped with Dual Sensor Brake Support II (DSBS II), when the engine switch is pressed to change the ignition mode to ON, or the selector position is changed, the display may not indicate current selector position immediately, but it is not a malfunction.

Manual mode indicator
(for automatic transmission vehicles)
When you are using the manual mode, the display shows the manual mode indicator (18).

Odometer / Trip Meter

The display (E) shows the odometer and trip meter.

The odometer records the total distance the vehicle has been driven.

The trip meter can be used to measure the distance traveled on short trips or between fuel stops.

You can use trip meter A or trip meter B independently.

To switch the display indication (E), push the trip meter selector knob (2) quickly.

To reset the trip meter, push and hold the trip meter selector knob (2) for few seconds when the display shows the trip meter.

NOTICE

Keep track of your odometer reading and check the maintenance schedule regularly for required services. Increased wear or damage to certain parts can result from failure to perform required services at the proper mileage intervals.

Setting Mode

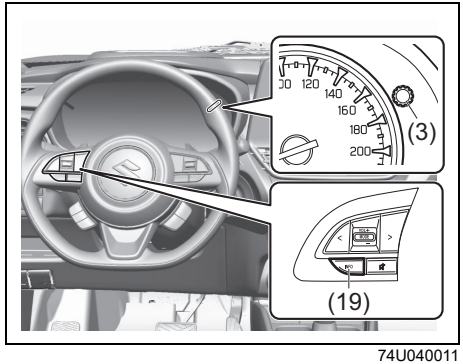

74U040011

When the engine switch is pressed to change the ignition mode to ON and the vehicle is stationary, you can enter into the setting mode of the information display by pushing and holding the information switch (if equipped) (19) or the indicator selector knob (3) for few seconds.

- To select the setting item that you want to change, turn the indicator selector knob (3) left or right.
- To change the setting, push the indicator selector knob (3).
- To exit the setting mode, select “Back” and quickly push the information switch (19) (if equipped) or push the indicator selector knob (3).

EXAMPLE

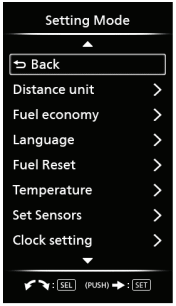

74TBX04037

NOTE:
- *The currently selected setting item is surrounded by a frame.*
- *If you push and hold the indicator selector knob (3) to enter into the setting mode when the display (D) shows average fuel consumption, average speed, driving time, total idling stop time and total idling fuel saved (if equipped), the value will be reset simultaneously. If you do not want to reset the value, push the indicator selector knob quickly to switch the indication of the display.*
- *If you turn the ignition switch, press the engine switch or start to move the vehicle when the display is in the setting mode, the setting mode will be cancelled automatically.*

Distance unit
(Odometer / trip meter / driving range / average speed distance unit setting)
You can change the units in which odometer / trip meter / driving range / average speed distance is displayed.

Fuel economy
(Fuel consumption unit setting)
You can change the units that fuel consumption is displayed in.

Language
You can change the language of the information display.

Fuel reset
(Average fuel consumption reset setting)
You can change when the value of average fuel consumption is reset.

Temperature
(Temperature unit setting)
You can change the units that temperature is displayed in.
- To change the temperature unit, select “Temperature” in “Setting Mode”. Then, select “°C” or “°F”.

NOTE:
When you change the units that temperature is displayed in, the automatic heating and air conditioning system (if equipped) temperature display units will be changed automatically.

Set sensors
(Parking sensor setting) (if equipped)
The parking sensor can be switched between the normal mode and trailer mode.

Clock setting (if equipped)
(Adjusting the clock)
- Adjust the clock by selecting “Clock setting” in “Setting Mode”. Then, select “Adjust clock”.
- To change the hour indication, turn the indicator selector knob (3) left or right repeatedly when the hour indication blinks. To change the hour indication quickly, turn and hold the indicator selector knob (3). To set the hour indication, push the indicator selector knob (3) and the minute indication blinks.
- To change the minute indication, turn the indicator selector knob (3) left or right repeatedly when the minute indication blinks. To change the minute indication quickly, turn and hold the indicator selector knob (3). To set the minute indication, push the indicator selector knob (3).

(Selecting 12H / 24H format)
- Switch the time indication between 12-hour and 24-hour format by selecting “Clock setting” in “Setting Mode”. Then, select “12H” or “24H”.

(Adjusting the date)
- Adjust the date by selecting “Clock setting” in “Setting Mode”. Then select “Adjust date”.
- To adjust year, month and day, operate the indicator selector knob (3) in the same way as adjusting the clock.

Door lock (Door lock setting)
(Door unlock)
- All Doors:
  Unlock all doors by keyless push start system remote controller or request switch once
- Driver Door:
  Unlock all doors by keyless push start system remote controller or request switch twice (default setting)

(Alarm)
- You can turn off or on the siren sound when the door(s) is(are) locked or unlocked.

Lights
(Lane change setting)
The turn signal and its indicator can be set whether they flash three times even if you return the turn signal control lever shortly after operating it.
- To change the lane change setting, select “Lane Change” in “Setting Mode”. Then, select “ON” or “OFF”
- If you want to change the number of flashing, consult an authorized SUZUKI dealer or a qualified workshop.

Guide me light setting
You can change the lighting time of “To car” function or “To home” function.

(Shock sensor P setting)
You can adjust the pre-warning sensitivity of shock sensor.

(Shock sensor F setting)
You can adjust the full blast warning sensitivity of shock sensor.

IS A/C
(ENG A-STOP system setting)
- When using the automatic heating and air conditioning system (if equipped), you can select one of the following engine auto stop settings.
  – Standard
  – Economy
  – Comfort
- When “Economy” is selected, engine auto stop condition is eased, compared with “Standard”. As engine auto stop condition will occur more frequently, the stop time will be longer, leading to reduction of fuel consumption.
- When “Comfort” is selected, engine auto stop condition becomes severe, compared with “Standard”. As engine auto stop condition will occur less frequently, the stop time will be shorter, leading to more comfortable cabin condition by air conditioner.

Display item
(“Car color” setting)
You can change the car color of the information display.

(“Calendar dis” setting)
You can select whether you show the calendar on the information display or not.

(“Calendar form” setting)
You can change the calendar form of the information display.
To change the calendar form, select “Calendar form” in “Display item”. Then, select the display order of date, month and year.

(“Fuel eco hist” setting)
Transitional indication of average fuel consumption can be switched to time indication and driving cycle indication.

(“Motion hist” setting) (if equipped)
Indication of G position history graph at the vehicle stopped can be selected to enable or disable.

(“Idling disp” setting)
Display of ENG A-STOP operation with ignition mode LOCK (OFF) is selectable to indicate or not to indicate.

(“Idling warn” setting)
You can switch whether the information display shows the warning and indicator messages related on the ENG A-STOP system.

(“Regen disp” setting) (if equipped)
You can choose that deceleration energy regenerating indicator light comes on or does not come on.

(“Parking sensors” setting) (if equipped)
Display of “Parking sensors” is selectable to indicate or not to indicate.

(“Intersection” setting) (if equipped)
Display of “Intersection” is selectable to indicate or not to indicate.

(“Lights” setting) (if equipped)
You can change ON/OFF of Light switch position display.

Animation
(“warning” setting)
Display of “Animation (warning)” is selectable to indicate or not to indicate.

Head-up Display setting (if equipped)
(Vehicle speed)
You can change ON/OFF of the vehicle speed.

(Gear position)
You can change ON/OFF of the gear position.

(Clock)
You can change ON/OFF of the clock.

(Intersection guidance
(working with the infotainment system))
You can change ON/OFF of the intersection guidance.

(DSBS II) (if equipped)
You can change ON/OFF of the interrupt display.

(Air conditioning system)
You can change ON/OFF display of the air conditioning system.

(High temperature warning message)
You can change ON/OFF of the high temperature warning message.

DSBS (if equipped)
(Warning timing)
You can select from the following warning timing settings:
- Earlier
- Default
- Later

LDP (Lane departure prevention system) (if equipped)
(Warning mode)
You can select “Vibration” or “Buzzer” of the warning mode.

(Warning timing)
You can select “Earlier” or “Default” of the warning timing.

(Swaying warning)
You can change ON/OFF of the swaying warning.

ACC (if equipped)
(Acceleration)
You can select from the following acceleration rate settings:
- Low
- Mid
- High

(Speed (Short push))
You can select from the following speed adjustment settings for a short push:
- ±1 km/h
- ±5 km/h
- ±10 km/h

(Speed (Long push))
You can select from the following speed adjustment settings for a long push:
- ±1 km/h
- ±5 km/h
- ±10 km/h

(Corner speed reduction)
You can select from the following settings of the curve speed reduction function:
- Off
- Low
- Mid
- High

BSM/RCTA (if equipped)
(Blind spot monitor)
You can change ON/OFF of the blind spot monitor (BSM).

(Rear cross traffic)
You can change ON/OFF of the rear cross traffic alert (RCTA).

Lights
(High beam assist)
You can change ON/OFF of the high beam assist function.

(Startup sound) (if equipped)
You can change ON/OFF of the startup sound.

(Notification sounds) (if equipped)
You can select from the following notification sound volume settings:
– Volume low
– Volume mid
– Volume high

Default
(Initialization setting)
If you select “YES” and push the indicator selector knob (3), all settings will be reinitialized.

Warning and Indicator Messages

The display shows warning and indicator messages to let you know about certain vehicle problems.
In some cases, the external or internal buzzer may also sound at the same time to alert you.
If warning and indicator messages appear on the display, follow the messages.

Master warning indicator light



74TBX04038

When the display shows warning and indicator messages, the master warning indicator light may also blink.

NOTE:
- *When the problem that causes a message to appear is corrected, the message will disappear.*
- *If a message is displayed, and other problems requiring a message occur, the message for each of the problems will be alternately displayed about every 5 seconds.*
- *When you push and hold the indicator selector knob (3) for about 2 seconds while a message is displayed, the message will disappear temporarily. If the problem that caused the message is not corrected, the message will appear again after 5 seconds. When you push and hold the indicator selector knob (3) for about 2 seconds while a message is displayed, the message will disappear temporarily. If the problem that caused the message is not corrected, the message will appear again after 5 seconds.*

Warning and indicator messages

All models

Warning and indicator	Message	Master warning indicator light	Sound	Cause and remedy
 72U00079	–	Blinks (only while vehicle is in motion) 	• Beep (one time from interior buzzer; only while vehicle is in motion)*1 • Beeps at long intervals (from interior buzzer)*2	A door, tailgate or engine hood is not properly closed. Stop the vehicle in a safe place and close the door, tailgate or engine hood properly.(#1)
 69T040090	"RELEASE PARKING BRAKE"	Blinks 	• Continuous beep (from interior buzzer)*1 • Beeps at short intervals (from interior buzzer)*2	The parking brake is not released. Stop the vehicle in a safe place and release the parking brake.

(#1) This message will disappear after a while even if the problem that caused the message to appear is not corrected.
*1: Vehicle without SUZUKI SAFETY SUPPORT
*2: Vehicle with SUZUKI SAFETY SUPPORT

Warning and indicator	Message	Master warning indicator light	Sound	Cause and remedy
 69T040100	“LIGHTS ON”	Blinks 	Continuous beep (from interior buzzer)	The headlights and/or the position lights are left on. Turn them off.
 69T040110	“LOW FUEL”	Off	Beep (one time from interior buzzer)	Fuel level is low. Refill it as soon as possible. (#1)

(#1) This message will disappear for a while even if the problem that caused the message to appear is not corrected.

Vehicle with keyless push start system

Warning and indicator	Message	Master warning indicator light	Sound	Cause and remedy
 69T040140	"IGNITION SWITCH POSITION ACC"	Off	Off	This message is displayed when ACC position is selected as the ignition mode. (#1)
 69T040150	"PUSH START SWITCH"	Off	Off	The brake pedal is depressed. Press the engine switch to start the engine.

(#1) This message will disappear for a while even if the problem that caused the message to appear is not corrected.

Warning and indicator	Message	Master warning indicator light	Sound	Cause and remedy
 69T040160	“SERVICE STEERING LOCK SYSTEM”	Blinks 	Beep (one time from interior buzzer)	There is a problem with the steering lock system. Have your vehicle inspected by an authorized SUZUKI dealer or a qualified workshop.
 69T040170	“SERVICE START SYSTEM”	Blinks 	Beep (one time from interior buzzer)	There is a problem with the immobilizer/keyless push start system. Also, the vehicle battery voltage may be decreased. When the message is displayed even if you start the engine with normal voltage of the vehicle battery, have your vehicle inspected by an authorized SUZUKI dealer or a qualified workshop.

Warning and indicator	Message	Master warning indicator light	Sound	Cause and remedy
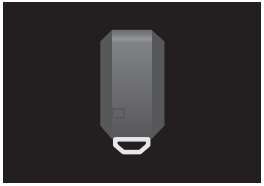 69T040180 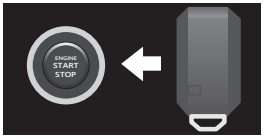 69T040190	“KEY FOB NOT DETECTED” “PLACE KEY FOB ON START SWITCH”	Blinks 	By certain conditions, you will hear a sound from interior and/or exterior of the vehicle.	The remote controller may be outside the vehicle or its battery may be discharged. Bring the remote controller in the vehicle or touch the engine push start switch with the remote controller. If the message still appears, replace the remote controller battery.

Warning and indicator	Message	Master warning indicator light	Sound	Cause and remedy
 69T040200	"IGNITION SWITCH POSITION"	Off	Off	This message is displayed when "ON" position is selected as the ignition mode. (#1)
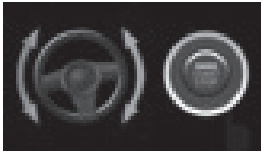 74U040020	"PRESS START SW WHILE TURNING STRG WHL"	Blinks 	Beep (one time from interior buzzer)	The steering lock is not disengaged. While lightly turning the steering wheel in both directions, press the engine switch again.

(#1) This message will disappear for a while even if the problem that caused the message to appear is not corrected.

Warning and indicator	Message	Master warning indicator light	Sound	Cause and remedy
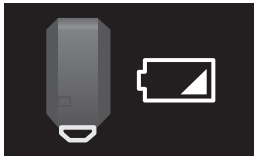 69T040210	“KEY FOB LOW BATTERY”	Off	• Off*1 • Chime (from interior buzzer)*2	The remote controller battery is about to become flat. Replace the battery. (#1)

(#1) This message will disappear for a while even if the problem that caused the message to appear is not corrected.
*1: Vehicle without SUZUKI SAFETY SUPPORT
*2: Vehicle with SUZUKI SAFETY SUPPORT

Warning and indicator	Message	Master warning indicator light	Sound	Cause and remedy
Automatic transmission vehicle 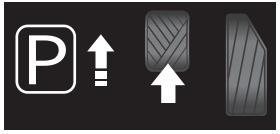 69T040230	“PRESS BRAKE SHIFT TO P TO START”	Off	• Off*1 • Short beep (from interior buzzer)/ Beeps at short intervals (from interior buzzer)/ Continuous beep (from interior buzzer)*2	• The engine switch is pressed with the gearshift lever in a position other than “P” or “N” and depressing the brake pedal. Try again as instructed by message. • For vehicle equipped with Dual Sensor Brake Support II (DSBS II), even though the gearshift lever is shifted, the gear is not shifted to the desired selector position. Shift the gearshift lever into “P” with depressing the brake pedal, and then operate the gearshift lever again.
Automatic transmission vehicle  69T040240	“GEARSHIFT NOT IN PARK”	Off	• Off*1 • Chime (from interior buzzer)*2	The engine switch is pressed with the gearshift lever in a position other than “P”. Try again as instructed by the message.

*1: Vehicle without SUZUKI SAFETY SUPPORT
*2: Vehicle with SUZUKI SAFETY SUPPORT

Vehicle with ESP® system

Warning and indicator	Message	Master warning indicator light	Sound	Cause and remedy
 69T040260	"SERVICE ESP SYSTEM"	Blinks 	Beep (one time from interior buzzer)	There may be a problem with ESP® system. Have your vehicle inspected by an authorized SUZUKI dealer or a qualified workshop.
 69T040260	"HILL HOLD DISABLE"	Blinks 	Beep (one time from interior buzzer)	There may be a problem with hill hold control system. Have your vehicle inspected by an authorized SUZUKI dealer or a qualified workshop.

Vehicle with SUZUKI SAFETY SUPPORT

Warning and indicator	Message	Master warning indicator light	Sound	Cause and remedy
 69T040280	"VEHICLE SWAYING DETECTED"	Off	Beep (one time from interior buzzer)	The vehicle swaying warning is activated. Refer to "Vehicle swaying warning" (P.5-67) for details.
 62R0316	"DUAL SENSOR BRAKE SUPPORT SYSTEM OFF"	Blinks 	Short beep (from interior buzzer)	The Dual Sensor Brake Support II (DSBS II) is turned off.
 62R0316	"Dual sensor brake support is also stopped because ESP is OFF"	Blinks 	Chime (from interior buzzer)	The Dual Sensor Brake Support II (DSBS II) is turned off.

Warning and indicator	Message	Master warning indicator light	Sound	Cause and remedy
 69TJ040610 Hands are illuminated in white	"KEEP CONTROL OF STEERING WHEEL"	Blinks 	Beeps at short intervals (from interior buzzer)	The system is detecting that the steering is not held or no steering operation. Hold the steering wheel firmly.
 69TJ040700 Hands are illuminated in white	"KEEP CONTROL OF STEERING WHEEL"	Blinks 	Off	

Warning and indicator	Message	Master warning indicator light	Sound	Cause and remedy
 69T040530 Hands are illuminated in red	"KEEP CONTROL OF STEERING WHEEL"	Blinks 	Beeps at short intervals (from interior buzzer)	The system is detecting that the steering is not held or no steering operation. Hold the steering wheel firmly.
 69T040530 Hands are illuminated in red	"UNAVAILABLE KEEP CONTROL OF STEERING WHEEL"	Blinks 	Continuous beeps (from interior buzzer)	
Not displayed	"DSBS II system inspection required"	Blinks 	Chime (from interior buzzer)	There may be a problem with the Dual Sensor Brake Support II (DSBSII). Consult an authorized SUZUKI dealer or a qualified workshop.

Warning and indicator	Message	Master warning indicator light	Sound	Cause and remedy
 69T040540	“LKA SYSTEM UNAVAILABLE AT CURRENT SPEED”	Off	Off	The lane keep assist system does not operate because the vehicle speed exceeds the maximum vehicle speed which the lane keep assist system operates.
			Beep (one time from interior buzzer)	When the lane keep assist system is operated, if the vehicle speed exceeds the maximum vehicle speed which the lane keep assist system operates, the lane keep assist is stopped.
 69T040280	“LDP SYSTEM UNAVAILABLE AT CURRENT SPEED”	Off	Off	The lane departure prevention system does not operate because the vehicle speed exceeds the maximum vehicle speed which the lane departure prevention system operates.

Warning and indicator	Message	Master warning indicator light	Sound	Cause and remedy
 69T040300	“ACCELERATOR PEDAL IS PRESSED PRESS BRAKE”	Blinks 	Beeps at short intervals (from interior buzzer)	After the automatic brake system is activated, the system is holding the vehicle in a stopped state. (when the accelerator pedal is depressed)
	“ACCELERATOR PEDAL IS PRESSED”			The automatic brake system is activated. (when the accelerator pedal is depressed)

Warning and indicator	Message	Master warning indicator light	Sound	Cause and remedy
Not displayed	“DSBS II SYSTEM STOPPED”	Off	Off	The dual sensor is temporarily stopped. Refer to “Temporary stop of the dual sensor” (P.5-56) for details.
Not displayed	“F CAMERA STOPPED (TEMP)”	Blinks 	Chime (from interior buzzer)	The front camera (DSBS II) functions is temporarily stopped, because the front camera (DSBS II) itself is in low and high temperature. Refer to “Temporary stop of the dual sensor” (P.5-56) for details.
Not displayed	“F CAMERA STOPPED (LOW VIS)”	Off	Off	The front camera (DSBS II) functions is temporarily stopped, because visibility from the front camera (DSBS II) is poor. Refer to “Temporary stop of the dual sensor” (P.5-56) for details.

Warning and indicator	Message	Master warning indicator light	Sound	Cause and remedy
Not displayed	“F RADAR STOPPED (TEMP)”	Blinks 	Chime (from interior buzzer)	The front radar (DSBS II) functions is temporarily stopped, because the front radar (DSBS II) itself is in low and high temperature. Refer to “Temporary stop of the dual sensor” (P.5-56) for details.
Not displayed	“CLEAN EXTERNAL RADAR”	Off	Off	The front radar (DSBS II) functions is temporarily stopped, because the surrounding areas of radar is dirty. Refer to “Temporary stop of the dual sensor” (P.5-56) for details.
Not displayed	“F RADAR STOPPED (CALIB)”	Off	Off	The front radar (DSBS II) functions is temporarily stopped, because the recognition angle of radar is bad. Refer to “Temporary stop of the dual sensor” (P.5-56) for details
Not displayed	“DSBS II SYSTEM DISABLED”	Blinks 	Chime (from interior buzzer)	There may be a problem with the dual sensor. If this message is still displayed even when you restart the engine, consult an authorized SUZUKI dealer or a qualified workshop.

Warning and indicator	Message	Master warning indicator light	Sound	Cause and remedy
 69T040300	"DUAL SENSOR BRAKE SUPPORT"	Blinks 	Beeps at short intervals (from interior buzzer)	The frontal collision warning is activated. Refer to "Frontal collision warning" (P.5-59) for details.
				The brake assist system is activated. Refer to "Brake assist system" (P.5-59) for details.
				The automatic brake system is activated. Refer to "Automatic brake system" (P.5-60) for details.
 69T040310	"CLEAN PARKING SENSORS"	Off	Off	The rear parking sensor is dirty. Refer to "When the ultrasonic sensor detects any foreign object" (P.5-103) for details.

Warning and indicator	Message	Master warning indicator light	Sound	Cause and remedy
 69T040310	"SERVICE PARKING SENSORS"	Blinks 	Chime (from interior buzzer)	There may be a problem with the ultrasonic sensors. If this message is still displayed even when you restart the engine, consult an authorized SUZUKI dealer or a qualified workshop.

Warning and indicator	Message	Master warning indicator light	Sound	Cause and remedy
 74U050016	–	Off	Short beeps at long intervals from interior buzzer or Short beeps at short intervals from interior buzzer	The ultrasonic sensors detect objects. Refer to “Parking sensors” (P.5-105) for details.
 74U050017	–	Off	Short beeps at very short intervals from interior buzzer	
 74U050018	–	Off	Continuous beep from interior buzzer	

NOTE:

- *If your vehicle is equipped with the ENG A-STOP system, the information display also indicates warning and indicator messages related to the system. For information on these messages, refer to "ENG A-STOP System (Engine Auto Stop Start System) (if equipped)" (P.5-34).*
- *If your vehicle is equipped with the Dual Sensor Brake Support II (DSBS II), the information display also indicates warning and indicator messages related to the system. For information on these messages, refer to "Dual Sensor Brake Support II (DSBS II)" (P.5-58).*
- *If your vehicle is equipped with the adaptive cruise control, the information display also indicates warning and indicator messages related to the system. For information on these messages, refer to "Adaptive cruise control" (P.5-80).*
- *If your vehicle is equipped with the lane departure prevention, the information display also indicates warning and indicator messages related to the system. For information on these messages, refer to "Lane departure prevention system" (P.5-66).*
- *If your vehicle is equipped with the Blind Spot Monitor (BSM) or Rear Cross Traffic Alert (RCTA), the information display also indicates warning and indicator messages related to the system. For information on these messages, refer to "Blind Spot Monitor (BSM) (if equipped)" (P.5-92) or "Rear Cross Traffic Alert (RCTA)" (P.5-98).*
- *If your vehicle is equipped with a parking sensor system, the information display also indicates warning and indicator messages related to the system. For information on these messages, refer to "Parking sensors" (P.5-105) or "Parking Sensors (Vehicle Without SUZUKI SAFETY SUPPORT)" (P.5-174).*

Warning and Indicator Lights

NOTE:
If warning and indicator lights blink or come on, the corresponding messages may be shown on the information display.

Brake System Warning Light

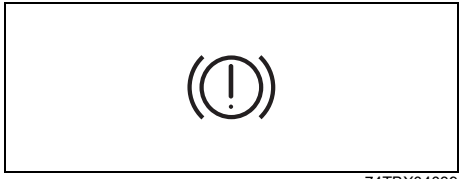

74TBX04039

Three different types of operations exist depending on the vehicle's specification.

1) The light comes on briefly when the ignition switch is turned to "ON" position or the engine switch is pressed to change the ignition mode to ON.
2) The light comes on when the parking brake is engaged with the ignition mode ON.
3) The light comes on when under either or both of above two conditions.

The light also comes on when the fluid in the brake fluid reservoir falls below the specified level.

The light should go out after starting the engine and fully releasing the parking brake, if the fluid level in the brake fluid reservoir is adequate.

The light also comes on together with the ABS warning light when the rear brake force control function (proportioning valve function) of the ABS system fails.

If the brake system warning light comes on while you are driving the vehicle, it may mean that there is something wrong with the vehicle's brake system. If this happens, you should:

1) Pull off the road and stop carefully.

⚠ WARNING

Remember that stopping distance may be longer, you may have to push harder on the pedal, and the pedal may go down farther than normal.

2) Test the brakes by carefully starting and stopping on the shoulder of the road.
3) If you determine that it is safe, drive the vehicle cautiously at low speed to the nearest authorized SUZUKI dealer or a qualified workshop for repairs or tow the vehicle to the nearest authorized SUZUKI dealer or a qualified workshop for repairs.

⚠ WARNING

If any of the following conditions occur, you should immediately ask an authorized SUZUKI dealer or a qualified workshop to inspect the brake system.

- **If the brake system warning light does not go out after the engine has been started and the parking brake has been fully released.**
- **If the brake system warning light does not come on when the engine switch is pressed to change the ignition mode to ON.**
- **If the brake system warning light comes on at any time during vehicle operation.**

NOTE:
Because the brake system is self-adjusting, the fluid level will drop as the brake pads become worn. Replenishing the brake fluid reservoir is considered normal periodic maintenance.

NOTE:
(Parking Brake Reminder Buzzer)
A buzzer sounds intermittently to remind you to release the parking brake if you start the vehicle without releasing the parking brake. Make sure that the parking brake is fully released and the brake system warning light turns off.

Seat Belt Reminder Light



74TBX04040

When the driver and/or front passenger do (does) not buckle his or her seat belt, this light will come on and/or blink.
For details about the seat belt reminder, refer to “Seat Belt Reminder” in “FOR SAFE DRIVING” section.

NOTE:
When this light comes on, seat belt reminder message is displayed on the information display. (For driver and front passenger only)

Rear Passenger’s Seat Belt Reminder Light

Type 1

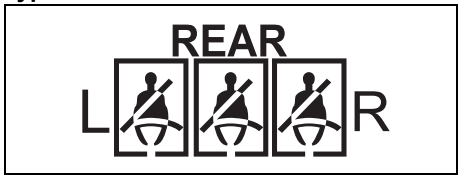

74TBX04095

Type 2

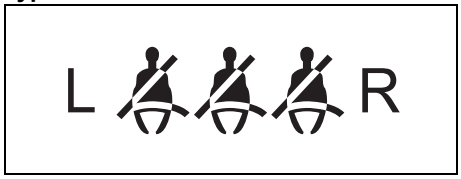

74TBX04096

When the rear passenger(s) do(does) not buckle his or her seat belt, this light will come on and/or blink.
For details about the seat belt reminder, refer to “Seat Belt Reminder” in “FOR SAFE DRIVING” section.

Airbag Warning Light



74TBX04069

This light blinks or comes on for several seconds when the ignition switch is turned to “ON” position or the engine switch is pressed to change the ignition mode to ON so you can check if the light is working.

The light will come on and stay on if there is a problem in the airbag system or the seat belt pretensioner system.

⚠ WARNING

If the airbag warning light does not blink or come on briefly when the engine switch is pressed to change the ignition mode to ON, stays on for more than 6 seconds, or comes on while driving, the airbag system or the seat belt pretensioner system may not work properly, which could result in serious injury in the event of a crash. Have both systems inspected by an authorized SUZUKI dealer or a qualified workshop.

Low Fuel Warning Light



74TBX04070

If this light comes on, refuel the fuel tank as soon as possible.

When this light comes on, a ding sounds once to remind you to refuel.
If you do not refuel, a ding sounds every time when the ignition switch is turned "ON" or pushed to "ON" mode.

NOTE:
- *The activation point of this light varies depending on road conditions (for example, slope or curve) and driving conditions because of fuel moving in the tank.*
- *When this light comes on, low fuel warning message is displayed on the information display.*
  For details, refer to "Warning and Indicator Messages" in this section.

Anti-lock Brake System (ABS) Warning Light

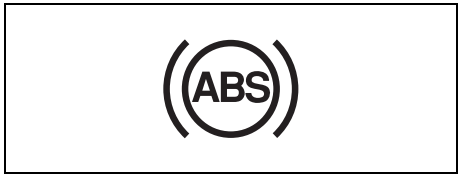

74TBX04071

When the ignition switch is turned to "ON" position or the engine switch is pressed to change the ignition mode to ON, the light comes on briefly so you can check that the light is working.
If the light stays on, or comes on when driving, there may be something wrong with the ABS.

If this happens:
1) Pull off the road and stop carefully.
2) Turn the ignition switch to "LOCK" position or change the ignition mode to LOCK (OFF) by pressing the engine switch and then start the engine again.

If the warning light comes on briefly then turns off, the system is normal. If the warning light still stays on, the system will be something wrong.

If the light and the brake system warning light stay on, or come on simultaneously when driving, your ABS system is equipped with the rear brake force control function (proportioning valve function) and there may be something wrong with both the rear brake force control function and anti-lock function of the ABS system.

If one of these happens, have the system inspected by an authorized SUZUKI dealer or a qualified workshop.
If the ABS becomes inoperative, the brake system will function as an ordinary brake system that does not have this ABS system.

For details of ABS system, refer to "Anti-lock Brake System (ABS)" in the "OPERATING YOUR VEHICLE" section.

High Engine Coolant Temperature Warning Light (red color) (if equipped)

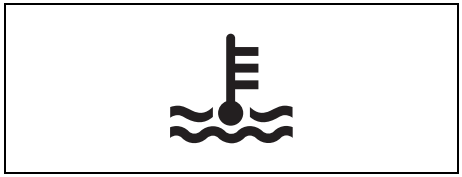

74TBX04072

When the ignition switch is turned to “ON” position or the engine switch is pressed to change the ignition mode to ON, this light comes on briefly so you can check that the light is working. If this light blinks while driving, it means the engine is running hot. If the light stays on after blinking, then the engine is overheating. To avoid actual overheating, if this light blinks or stays on while driving, follow the instructions in the “Engine Trouble: Overheating” of “EMERGENCY SERVICE” section.

NOTICE

Continuing to drive the vehicle when engine overheating is indicated can result in severe engine damage.

Malfunction Indicator Light

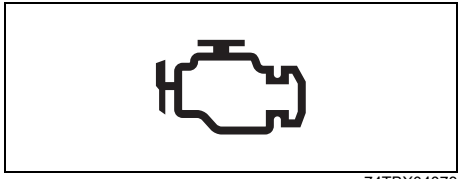

74TBX04073

Your vehicle has a computer-controlled emission control system. A malfunction indicator light is provided on the instrument cluster to indicate when it is necessary to have the emission control system serviced. The malfunction indicator light comes on when the ignition switch is turned to “ON” position or the engine switch is pressed to change the ignition mode to ON to let you know the light is working and goes out when the engine is started.

If the malfunction indicator light comes on or blinks when the engine is running, there is a damage in the emission control system.
Bring the vehicle to an authorized SUZUKI dealer or a qualified workshop to have the damage fixed.

⚠ WARNING

If this light blinks, stop your vehicle immediately in a safe place to avoid catalyst's melting problem since there may be a misfire in the engine.
- **Do not drive or stop over such as withered grasses.**

Drive slowly if required to move the vehicle.

Also, if this light comes on when the engine is running, there is a problem with the automatic transmission system. Ask an authorized SUZUKI dealer or a qualified workshop to have the system inspected.

NOTICE

Continuing to drive the vehicle when the malfunction indicator light is on or blinking can cause permanent damage to the vehicle’s emission control system, and can affect fuel economy and driveability.

Electric Power Steering Light

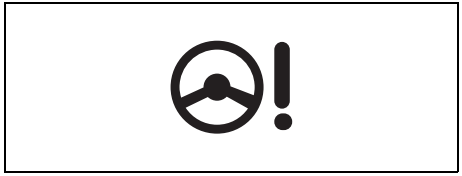

74TBX04074

This light comes on when the ignition switch is turned to “ON” position or the engine switch is pressed to change the ignition mode to ON, and goes out when the engine is started.

If this light comes on while driving, the power steering system may not work properly. Have the system inspected by an authorized SUZUKI dealer or a qualified workshop.

NOTE:

- *Following operations of the steering wheel while parking or driving at a very low speed may have steering effort bigger gradually. This is not a malfunction of the steering system, but the power steering control system limits the power assist in order to prevent them from overheating.*
  - *The steering wheel is operated very often.*
  - *The steering wheel is kept in a fully turned position for a long while.*

  When the power steering control system cool down, the power steering system back to the original condition.
  However, repeating these operations could cause the power steering system damaged.
- *If the power steering system does not work properly, you will feel heavier to steer but you still will be able to steer.*
- *If the steering is operated, you may hear a noise. This is normal and indicates that the power steering system works properly.*

Steering lock warning light (if equipped)



52RS20100

If this light stays on, there is a problem with the system or the steering lock cannot be released. If this happens, press the engine switch, turning the steering wheel to the right or left. If this light still stays on, ask an authorized SUZUKI dealer to have the system inspected.

Engine Oil Pressure Warning Light

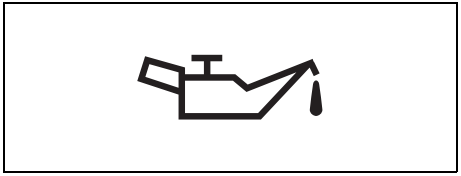

74TBX04075

This light comes on when the ignition switch is turned to “ON” position or the engine switch is pressed to change the ignition mode to ON, and goes out when the engine is started. The light will come on and remain on if there is insufficient oil pressure. If the light comes on when driving, pull off the road as soon as you can and stop the engine.
Check the oil level and add oil if necessary. If there is enough oil, the lubrication system should be inspected by an authorized SUZUKI dealer or a qualified workshop before you drive the vehicle again.

NOTICE

- **If you operate the engine with this light on, severe engine damage can result.**
- **Do not rely on the engine oil pressure warning light to indicate the need to add oil. Be sure to periodically check the engine oil level.**

Charge Warning Light

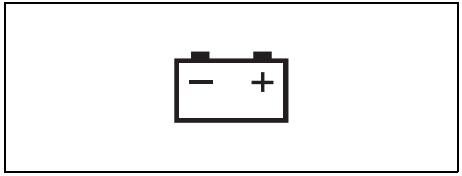

74TBX04076

This light comes on when the ignition switch is turned to “ON” position or the engine switch is pressed to change the ignition mode to ON, and goes out when the engine is started. The light will come on and remain on if there is something wrong with the battery charging system. If the light comes on when the engine is running, the charging system should be inspected immediately by an authorized SUZUKI dealer or a qualified workshop.

Cruise Control Indicator Light (if equipped)

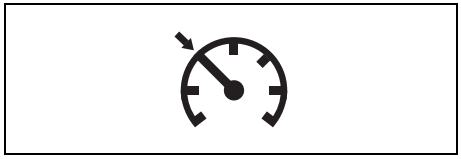

74TBX04077

When the cruise control is on, this light will be on.

“SET” Indicator Light (if equipped)



74TBX04080

When a cruising speed of the cruise control is set, this light will be on.

Transmission Warning Light (AT models)

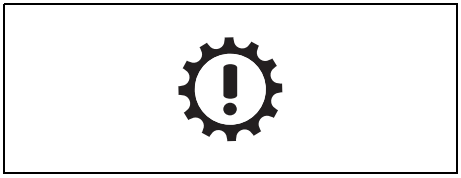

74TBX04079

When the ignition switch is turned to “ON” position or the engine switch is pressed to change the ignition mode to ON, this light comes on for several seconds so you can check that the light is working.

If this light comes on when the ignition switch is turned to “ON” position or the engine switch is pressed to change the ignition mode to ON, there is a problem with the Automatic Transmission system.
If this light comes on or blinks, stop the vehicle in a safe place and contact an authorized SUZUKI dealer or a qualified workshop. If the light comes on or blinks again after the light goes out, have the system inspected by an authorized SUZUKI dealer or a qualified workshop.

Immobilizer / Keyless Push Start System (if equipped) Warning Light

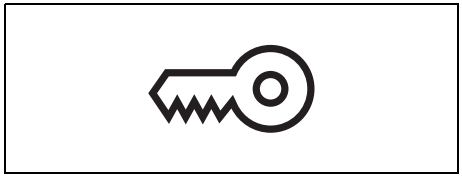

74TBX04081

When the ignition switch is turned to “ON” position or the engine switch is pressed to change the ignition mode to ON, the light comes on briefly so you can check that the light is working.

If this light blinks or stays on, there is a problem with the system.

If this light still blinks or stays on even if you start the engine with normal voltage of the vehicle battery, ask an authorized SUZUKI dealer or a qualified workshop to have the system inspected.

Open Door Warning Light

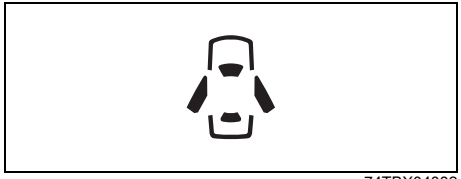

74TBX04082

This light remains on until all doors (including the tailgate) are completely closed.

If any door (including the tailgate) is open when the vehicle is moving, a ding sounds to remind you to close all doors completely.

High beam assist warning light (yellow) (if equipped)

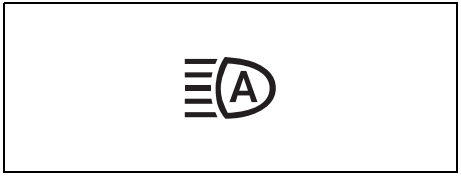

52RM20690

When the engine switch is pressed to change the ignition mode to ON, this light comes on by yellow briefly so you can check that the light is working.

When the high beam assist has failure, this light will come on and the Dual Sensor Brake Support II (DSBS II) will stop functioning when the ignition mode is ON. Ask an authorized SUZUKI dealer or a qualified workshop to have the dual sensor inspected.

NOTE:
If the function of the dual sensor stops temporarily, high beam assist also stops temporarily. For details, refer to “High beam assist” (P.5-78).

PUSH indicator light (if equipped)

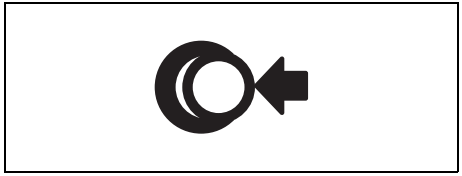

52RS20360

If this light comes on when depressing the brake pedal for automatic transaxle vehicles, or the clutch pedal for manual transaxle vehicles, you can start the engine.

"ACC" indicator light (if equipped)



52RS20370

This light comes on when the ignition mode is ACC.

Ignition "ON" indicator light (if equipped)

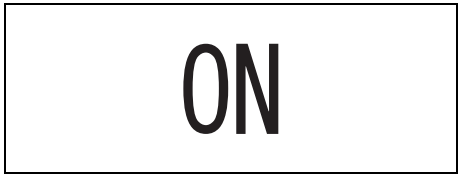

52RS20380

This light comes on when the ignition mode is ON with the engine off.

Turn Signal Indicators

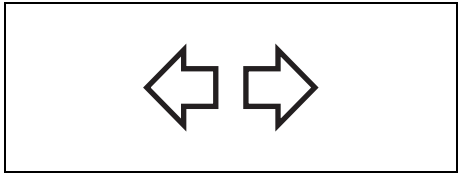

74TBX04083

When you turn on the left or right turn signals, the corresponding green arrow on the instrument cluster will blink along with the respective turn signal lights. When you turn on the hazard warning switch, both arrows will blink along with all of the turn signal lights.

NOTE:
If any abnormality of the turn signals is observed, such as fast blinking, there may be a malfunction in the turn signal system. Ask an authorized SUZUKI dealer or a qualified workshop to inspect the system.

Main Beam (High beam) Indicator Light

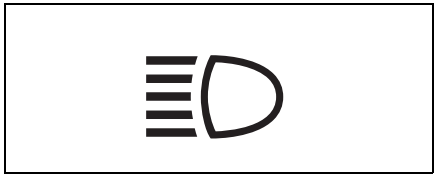

74TBX04084

This indicator comes on when headlight main beams (high beams) are turned on.

Illumination Indicator Light

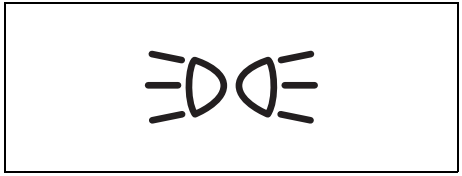

74TBX04085

This indicator light comes on while the position lights, tail light and/or the headlights are on.

Theft deterrent light

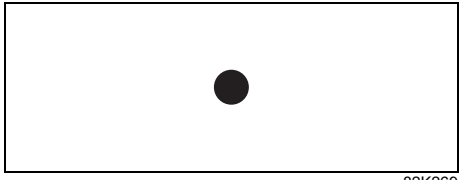

82K269

For details about the theft deterrent alarm system, refer to “Security System” (P.3-16).

ESP® OFF Indicator Light



74TBX04086

When the ignition switch is turned to “ON” position or the engine switch is pressed to change the ignition mode to ON, this light comes on briefly so you can check that the light is working.

When the ESP® OFF switch is pushed to turn off the ESP® systems (other than ABS), the ESP® OFF indicator light comes on and stays on.

For details of the ESP® systems, refer to “Electronic Stability Program (ESP®)” in the “OPERATING YOUR VEHICLE” section.

ESP® Indicator Light



74TBX04087

ESP® is a registered trademark of Mercedes-Benz Group AG.

This light blinks 5 times per second when one of the following systems is activated.
- Stability control system
- Traction control system

If this light blinks, drive carefully.

When the ignition switch is turned to “ON” position or the engine switch is pressed to change the ignition mode to ON, the light comes on briefly so you can check that the light is working. If the light stays on, or comes on when driving and remains on, there may be something wrong with the ESP® systems (other than ABS). You should have the system inspected by an authorized SUZUKI dealer or a qualified workshop.

For details of the ESP® systems, refer to “Electronic Stability Program (ESP®)” in the “OPERATING YOUR VEHICLE” section.

⚠ WARNING

The ESP® systems cannot prevent accidents. Always drive carefully.

Low Engine Coolant Temperature Light (blue color) (if equipped)

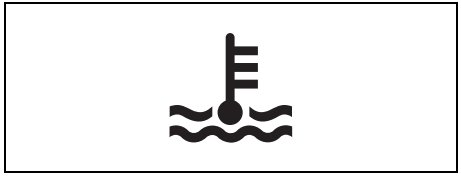

74TBX04088

When the ignition switch is turned to “ON” position or the engine switch is pressed to change the ignition mode to ON, this light comes on and stays on if the engine is cold, and goes off after the engine warms up.

If this light still stays on after the engine warms up, there is a problem with the sensor.
Have your vehicle inspected by an authorized SUZUKI dealer or a qualified workshop.

ENG A-STOP Indicator Light (if equipped)

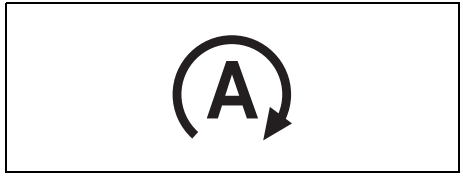

74TBX04089

When the engine switch is pressed to change the ignition mode to ON, this light comes on briefly to let you know the light is working.

When the engine stops automatically, this light comes on.

For details, refer to “ENG A-STOP System (Engine Auto Stop Start System) (if equipped)” in the “OPERATING YOUR VEHICLE” section.

ENG A-STOP OFF Indicator Light (if equipped)

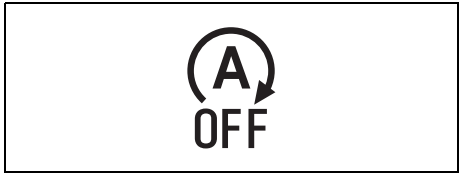

74TBX04090

When the engine switch is pressed to change the ignition mode to ON, this light comes on briefly if the system works properly.

When you push the ENG A-STOP OFF switch, this light comes on.

The ENG A-STOP OFF indicator light blinks under the following conditions:
- If there is something wrong with the ENG A-STOP system
- If there is something wrong with the lithium-ion battery
- When the lead-acid battery is due for replacement

If the ENG A-STOP OFF indicator light blinks, have your vehicle inspected immediately by an authorized SUZUKI dealer or a qualified workshop.
For details, refer to “ENG A-STOP OFF Light (if equipped)” in the “OPERATING YOUR VEHICLE” section.

Deceleration Energy Regenerating Indicator Light (if equipped)

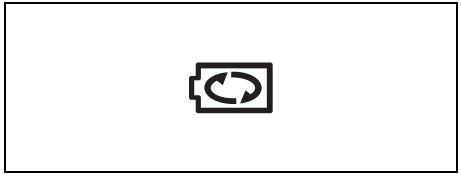

74TBX04091

When the ignition switch is turned to “ON” position or the engine switch is pressed to change the ignition mode to “ON”, this light comes on briefly so you can check that the light is working.

When the deceleration energy regenerating function is working, this light comes on.

For details, refer to “SHVS (Smart Hybrid Vehicle by Suzuki) (if equipped)” in “OPERATING YOUR VEHICLE” section.

Master Warning Indicator Light (if equipped)



74TBX04092

When the ignition switch is turned “ON” or pushed to “ON” mode, this light comes on briefly so you can check that the light is working.

When the information display shows warning and indicator messages, this indicator light may also blink.

For details, refer to “Warning and Indicator Messages” in this section.

Overdrive off switch light (if equipped)

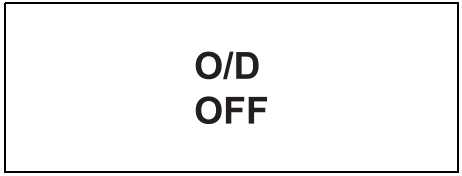

76TS40680

The transmission is a 4-speed (3-speed plus overdrive) automatic transmission. By operating the overdrive off switch, the transmission can be converted to a 3-speed automatic transmission that will not move to the overdrive position. To convert the transmission to the 3-speed mode, push in the overdrive off switch and release it.

To return the transmission to the 4-speed mode, push in the overdrive off switch again.

When the engine switch is pressed to change the ignition mode to ACC, the transmission in the 3-speed mode is converted to the 4-speed mode automatically.
The 3-speed mode is suitable for the following driving conditions:
• Driving on hilly, winding roads
– You can drive more smoothly with less frequent gear changing
• Going down a steep hill
– Some engine braking is provided

For details, refer to “Overdrive off switch” in “OPERATING YOUR VEHICLE” section.

Dual Sensor Brake Support II (DSBS II) OFF indicator light (if equipped)



62R0316

When the engine switch is pressed to change the ignition mode to ON, this light comes on briefly so you can check that the light is working.

- In the following situations, this light will come on and the Dual Sensor Brake Support II (DSBS II) system will stop functioning.
  – When the Dual Sensor Brake Support II (DSBS II) OFF switch is pushed and held to turn off the Dual Sensor Brake Support II (DSBS II) system.
  – When the ESP® OFF switch is pushed to turn off the ESP® systems (other than ABS), the ESP® OFF indicator light will also come on.
- If this light comes on, there is a problem with the Dual Sensor Brake Support II (DSBS II). Bring the vehicle to an authorized SUZUKI dealer or a qualified workshop to have the problem corrected.

For details, refer to “Dual Sensor Brake Support II (DSBS II)” (P.5-58).

Lane departure prevention indicator light (if equipped)



81M31080

When the engine switch is pressed to change the ignition mode to ON, this light comes on briefly so you can check that the light is working.

The indicator color and coming on/blinking status change depending on the operating status of systems.

For details, refer to “Displays and system operation” of “Lane departure prevention system” (P.5-66).

If there is a problem in the lane departure prevention with the engine switch in ON mode, this light will come on by yellow. Bring the vehicle to an authorized SUZUKI dealer or a qualified workshop to have the problem corrected.

Lane departure prevention OFF indicator light (if equipped)

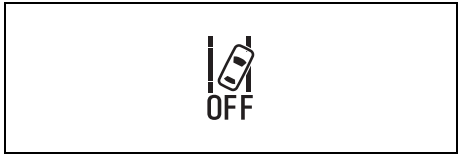

62R0317

When the lane departure prevention OFF switch is pushed and held to turn off the lane departure prevention, this light comes on.

For details, refer to “Displays and system operation” of “Lane departure prevention system” (P.5-66).

Lane keep assist indicator light (if equipped)

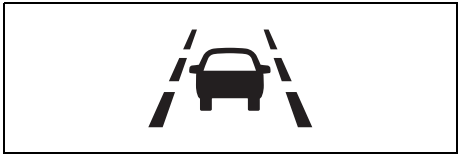

74SB12002

When the engine switch is pressed to change the ignition mode to ON, this light comes on briefly so you can check that the light is working.

The indicator color and coming on/blinking status change depending on the operating status of systems.

For details, refer to “Operation display of steering wheel operation support” of “Lane keep assist” (P.5-73).

If there is a problem in the lane keep assist with the engine switch in ON mode, this light will come on by yellow. Bring the vehicle to an authorized SUZUKI dealer or a qualified workshop to have the problem corrected.

Steering assist indicator light (if equipped)



69T010150

When the engine switch is pressed to change the ignition mode to ON, this light comes on at green briefly so you can check that the light is working.

The indicator color and coming on/blinking status change depending on the operating status of systems.

For details, refer to “Displays and system operation” of “Lane departure prevention system” (P.5-66) and “Operation display of steering wheel operation support” of “Lane keep assist” (P.5-73).

High beam assist indicator light (green) (if equipped)

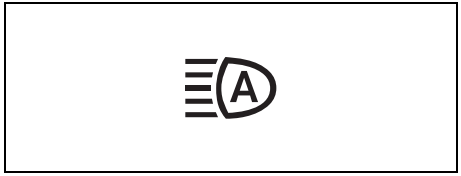

52RM20690

When the high beam assist is working, this light comes on by green.

For details, refer to “High beam assist” (P.5-78).

Adaptive cruise control indicator light (if equipped)

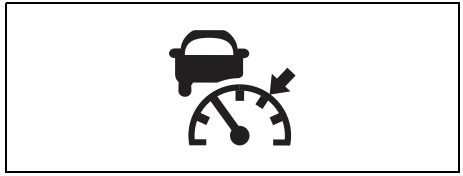

69TJ010190

The indicator color and coming on status change depending on the operating status of systems.

- When the adaptive cruise control is standby condition, this light comes on by white.
- When the adaptive cruise control is activate, this light comes on by green.

If there is a problem in the adaptive cruise control with the engine switch in ON mode, this light will come on.

Parking sensor indicator light (If equipped)



59S010120

When the engine switch is pressed to change the ignition mode to ON, this light comes on briefly so you can check that the light is working.

When the rear parking sensors is activated and then detected obstacles, this light blinks.

If this light comes on, there is a problem with the rear parking sensors. Bring the vehicle to an authorized SUZUKI dealer or a qualified workshop to have the problem corrected.

For details, refer to “Parking sensors” (P.5-105).

Blind Spot Monitor (BSM) OFF indicator light (if equipped)

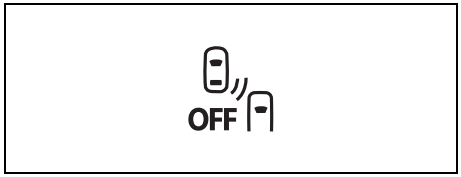

52R10320

When the engine switch is pressed to change the ignition mode to ON, this light comes on briefly so you can check that the light is working.

When the blind spot monitor (BSM) is turned off by changing the setting mode of information display, this indicator light comes on.

- When the BSM is stopped, the blind spot monitor OFF indicator light and rear cross traffic alert OFF indicator light come on.

Rear Cross Traffic Alert (RCTA) OFF indicator light (if equipped)

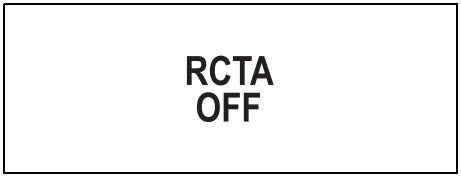

52R10330

When the engine switch is pressed to change the ignition mode to ON, this light comes on briefly so you can check that the light is working.

When the rear cross traffic alert (RCTA) is turned off by changing the setting mode of information display, this indicator light comes on.

MEMO

OPERATING YOUR VEHICLE

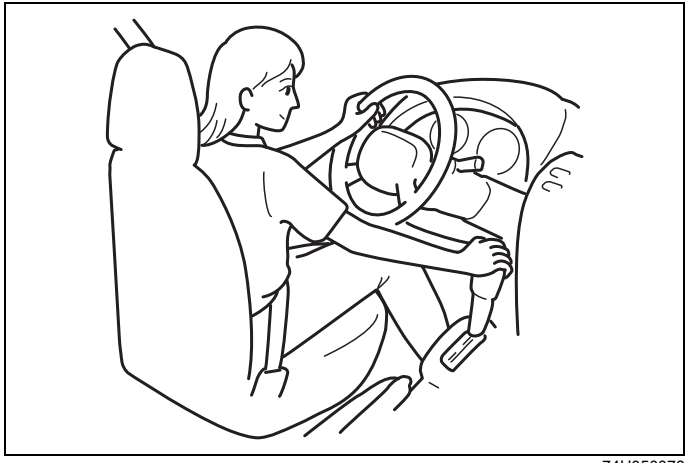

74U050078

Daily Inspection Checklist 5-1
Ignition Switch (Vehicle without Keyless Push Start System) (if equipped) 5-5
Engine Switch (Vehicle with Keyless Push Start System) (if equipped) 5-6
Immobilizer System 5-8
Pedal 5-10
Keyless Push Start System (if equipped) 5-10
Starting / Stopping Engine (Vehicle without Keyless Push Start System) (if equipped) 5-15
Starting / Stopping Engine (Vehicle with Keyless Push Start System) (if equipped) 5-16
Parking Brake Lever 5-18
Precaution for Parking 5-20
Using Transmission 5-22
Gearshift Indicator (if equipped) 5-29
SHVS (Smart Hybrid Vehicle by Suzuki) (if equipped) 5-32
ENG A-STOP System (Engine Auto Stop Start System) (if equipped) 5-34
Cruise Control (if equipped) 5-44
SUZUKI SAFETY SUPPORT (if equipped) 5-46
Head-up Display (Vehicle Without SUZUKI SAFETY SUPPORT) 5-141
360 View Camera (Vehicle Without SUZUKI SAFETY SUPPORT) 5-148
Parking Sensors (Vehicle Without SUZUKI SAFETY SUPPORT) 5-174
Rearview Camera (if equipped) 5-180
Electronic Stability Program (ESP®) 5-183
Braking 5-187
Anti-lock Brake System (ABS) 5-189

Daily Inspection Checklist

Before Driving

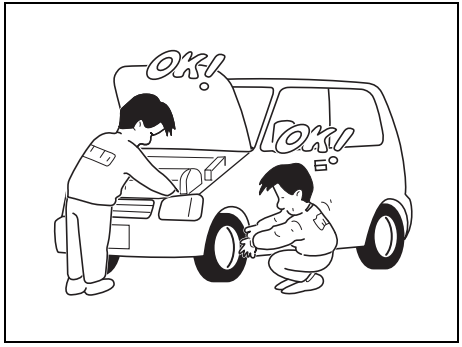

74TBX05001

1) Check that the windows, mirrors, lights and reflectors are clean and unobstructed.
2) Visually check the tyres for the following points:
   – the depth of the tread groove
   – abnormal wear, cracks and damage
   – loose wheel nuts
   – existence of foreign material such as nails, stones, etc.

   Refer to “Tyres” in “INSPECTION AND MAINTENANCE” section for details.

3) Look for fluid and oil leakage.

NOTE:
It is normal for water to drip from the air conditioning system while and after use.

4) Check that the hood is fully closed and latched.
5) Check the headlights, turn signal lights, brake lights and horn for proper operation.
6) Adjust the seat and head restraint.
7) Check the brake pedal feeling and the adjustment condition for the parking brake lever or pedal.
   Refer to “Brakes” in “INSPECTION AND MAINTENANCE” section for details.
8) Adjust the mirrors.
9) Check that you and all the passengers have properly fastened the seat belts.
10) Check that all the warning lights come on as the ignition switch is turned to “ON” position.
11) Check all the gauges.
12) Check that the brake system warning light turns off when the parking brake is released.

Once a week, or each time you fill your fuel tank, or before a long distance driving (like highway driving) perform the following under-hood checks:

1) Engine oil level
2) Coolant level
3) Brake fluid level
4) Battery fluid (acid) level
5) Windshield washer fluid level
6) Hood latch operation
   Pull the hood release lever inside the vehicle. Check that you cannot open the hood further without releasing the secondary latch. Close the hood securely after checking for proper latch operation. See the item “All latches, hinges and locks” of “Chassis, body and others” in “Maintenance Schedule” in “INSPECTION AND MAINTENANCE” section for lubrication schedule.

⚠ WARNING

Check that the hood is fully closed and latched before driving. If it is not, it can fly up unexpectedly during driving, obstructing your view and resulting in an accident.

Once a month, or each time you fill your fuel tank, check the tyre pressure using a tyre pressure gauge. Also check the tyre pressure of the spare tyre.

When You Notice the Following Symptoms



74TBX05002

⚠ CAUTION

If you keep using your vehicle in the following conditions, malfunction and an accident may occur. Consult an authorized SUZUKI dealer or a qualified workshop.

- **Leaked oil or other liquid appears on the ground below the vehicle.**
- **Brake fluid level is low.**
- **There are unusual odors, sounds or vibrations.**
- **The feeling of operating the steering wheel or the brakes is different than usual.**

Check the Tyre Pressure

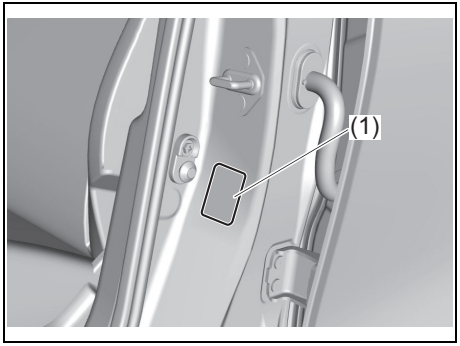

74U050034

- Periodically check and adjust the tyre pressure. The specified tyre pressure for the tyres of this vehicle can be confirmed by checking the tyre information label (1) affixed to the opening of the driver's door.
- Driving with insufficient tyre pressure can cause the sides of the tyre to wear, in addition to decreasing fuel efficiency.

⚠ WARNING

- **Driving with extremely low tyre pressure can cause a tyre blowout (bursting) and may result in an accident. Do not drive with extremely low tyre pressure.**

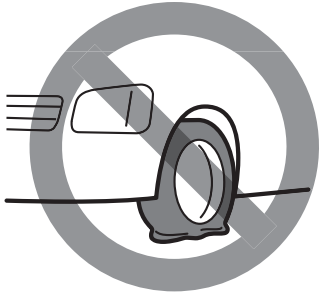

74TBX05004

- **If the specified tyre pressure is not maintained, the full performance of the vehicle cannot be achieved and the following could occur, leading to accidents or malfunctions. Adjust the tyre pressure as specified.**
  - **– Decreased driving stability**
  - **– Longer distance required for braking**

(Continued)

⚠ WARNING

(Continued)

– Accurate tyre rotation speed cannot be detected, which interferes with the following functions:
- **ABS**
- **Electronic stability program (ESP®)**
- **Some functions of Dual Sensor Brake Support II (DSBS II) (if equipped)**

For details, refer to "If accurate tyre rotation speed cannot be detected" (P.5-48).

To adjust the tyre pressure, refer to "Tyres" in "INSPECTION AND MAINTENANCE" section.

Check the Battery

This vehicle is equipped with the following batteries.
- Lead-acid battery
  This is used to supply power to the vehicle.
- Lithium-ion battery
  This is used to supply electrical power to the vehicle's electrical components.

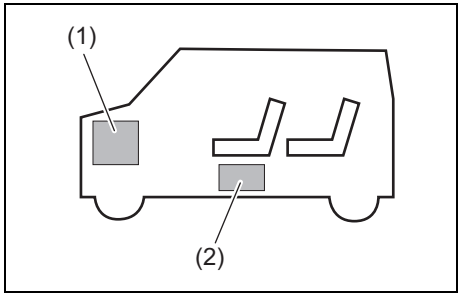

59RN05730

(1) Lead-acid battery
(2) Lithium-ion battery

Carefully read the instructions in the following sections, "Lead-acid Battery" and "Lithium-ion Battery", for the correct handling of each battery.
- The lead-acid battery and the lithium-ion battery discharge gradually. In order to avoid a flat battery, drive the vehicle once a month for at least 30 minutes to recharge the battery.

Lead-acid battery

Check the fluid level of lead-acid battery

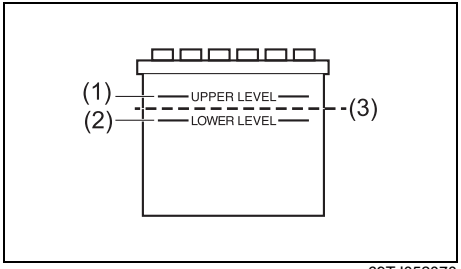

69TJ052070

If the fluid level is lower than the intermediate line (3) between the upper level line (1) and lower level line (2), add the battery fluid up to the upper level line (1). A lack of battery fluid may cause reduced battery life.

⚠ WARNING

- **A lack of the electrolyte fluid could cause the danger of battery explosion due to overheating. Do not use the battery or do not charge the battery, with the fluid level below the lower limit.**
- **Loose connection of the battery terminals could cause fire or malfunction. When detaching the battery terminals and connecting them again, ensure a tight connection.**

NOTICE

- **If the fluid level exceeds the upper level line (1), battery fluid may leak or spill over and corrode peripheral parts.**
  Do not add the battery fluid more than the upper level line (1).
- **Since this vehicle uses a lead-acid battery specifically for the high-efficiency idling stop system, observe the following precautions. Failure to observe these precautions may result in a malfunction of the system or a shortened battery life.**
  - **When replacing the battery, only use the specified type. (Do not use any other type of battery.)**
  - **Do not connect electrical accessories to the terminals.**

Lithium-ion battery

This battery is installed only in models equipped with the HYBRID and is located under the front passenger's seat (under the under seat container).

- The lithium-ion battery is maintenance-free. However, in order to avoid a flat battery, drive the vehicle once a month for at least 30 minutes to recharge the battery.
- When replacing or disposing of the lithium-ion battery, consult an authorized SUZUKI dealer or a qualified workshop.

⚠ WARNING

Since mishandling the lithium-ion battery may cause a fire or electric shock or damage to the battery, observe the following precautions.

- **Do not remove or disassemble it.**
- **Do not allow it to get wet, for example, with water.**
- **Do not expose it to a strong impact.**
- **Do not lean or place any object on it.**
- **Do not disconnect the cable at the battery or connect electrical accessories to the terminals.**

Check the Exhaust Pipe

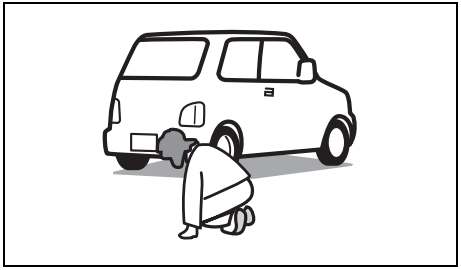

74TBX05005

Periodically check the exhaust pipes for holes or cracks.

⚠ WARNING

If leaks in exhaust pipes are present, exhaust gas could enter the vehicle and possibly cause carbon monoxide poisoning. If you feel that something is abnormal, consult an authorized SUZUKI dealer or a qualified workshop.

Ignition Switch (Vehicle without Keyless Push Start System) (if equipped)

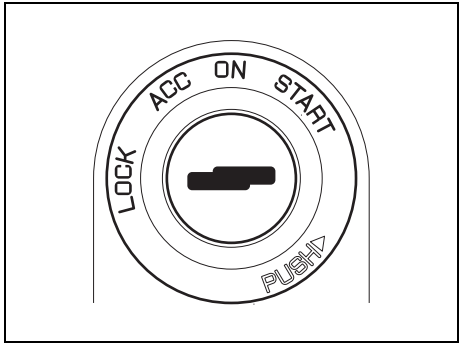

74TBX05006

The ignition switch has the following four positions:

LOCK
This is the normal parking position. It is the only position in which the key can be removed.

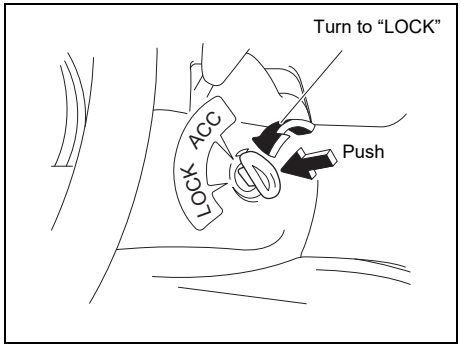

74TBX05007

- **Automatic transmission vehicles:**
  The gearshift lever must be in "P" (Park) position to turn the key to "LOCK" Position. It locks the ignition and prevents normal use of the steering wheel and gearshift lever.

To release the steering lock, insert the key and turn it clockwise to one of the other positions. If you have trouble turning the key to unlock the steering wheel, try turning the steering wheel slightly to the right or left while turning the key.

ACC
Accessories such as the radio can operate, but the engine is off.

ON
This is the normal operating position. All electrical systems are on.

START
This is the position for starting the engine using the starter motor. The key should be released from this position as soon as the engine starts.

Ignition key reminder
A buzzer sounds intermittently to remind you to remove the ignition key if it is in the ignition switch when the driver's door is opened.

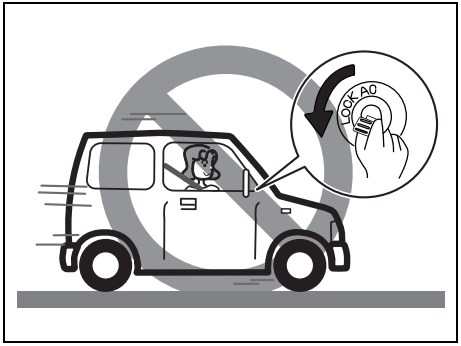

74TBX05008

⚠ WARNING

- **Never return the ignition switch to "LOCK" position and remove the ignition key while the vehicle is moving. The steering wheel will lock and you will not be able to steer the vehicle.**
- **Always return the ignition switch to "LOCK" position and remove the ignition key when leaving the vehicle even only for a short time. Also do not leave children alone in a parked vehicle. Unattended children could cause accidental movement of the vehicle or could tamper with power windows. They also could suffer from heat stroke in warm or hot weather. These could result in severe injury or even death.**

NOTICE

Do not leave the ignition switch in "ON" position if the engine is not running as the lead-acid battery will discharge.

Engine Switch (Vehicle with Keyless Push Start System) (if equipped)

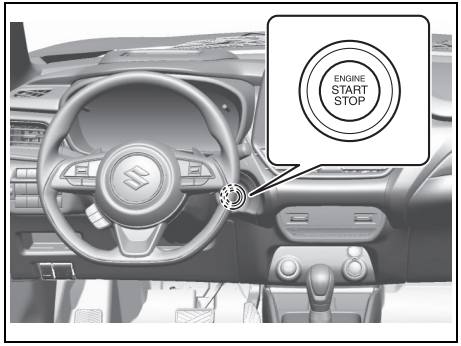

74U050035

LOCK (OFF)
This mode is for parking the vehicle. When this mode is selected by pressing the engine switch and then any door (including the tailgate) is opened or closed, the steering will be locked automatically.

ACC
Press the engine switch to select this ignition mode to use such electric equipment as the audio system, outside rearview mirrors and accessory socket with the engine off. When this position is selected, the information display in the instrument cluster shows the following message.

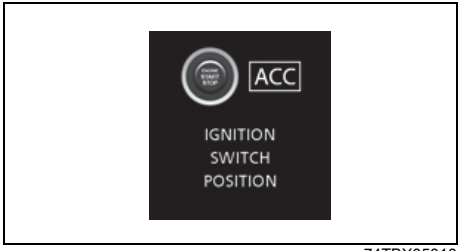

74TBX05010

ON

- **With the engine off**
  You can use such electric equipment as the power windows and wipers with the engine off. When this ignition mode is selected by pressing the engine switch, the information display in the instrument cluster shows the following message.

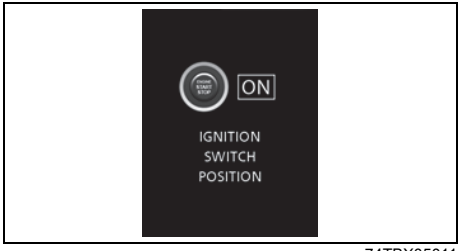

74TBX05011

- **With the engine on**
  All electric equipment is operational. The vehicle can be driven when you have selected this ignition mode by pressing the engine switch.

START

Automatic transmission vehicles:

Provided you have the keyless push start system remote controller with you, the engine automatically starts when you press the engine switch to select this ignition mode after placing the gearshift lever in “P” (Park) position and depressing the brake pedal. (If you need to restart the engine while the vehicle is moving, shift into “N”.)

NOTICE

Do not leave the engine switch in ACC or ON mode when the engine is not running. Avoid using the radio or other electric accessories for a long time when the engine switch is in ACC or ON mode when the engine is not running, otherwise the lead-acid battery may discharge.

NOTE:

- *The steering will be unlocked when you press the engine switch to change the ignition mode from LOCK (OFF) to ACC or ON.*
- *You do not need to keep the engine switch pressed until the engine starts.*
- *In the presence of strong radio wave or noise, you may not be able to change the ignition mode to ACC or ON or to start the engine using the engine switch. In this case, the information display in the instrument cluster will show the following message.*

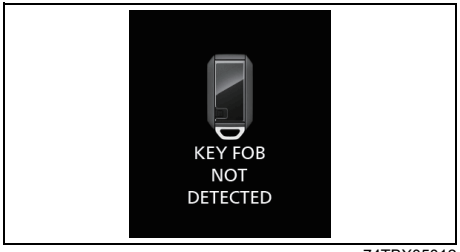

74TBX05012

Unreleased Steering Lock Warning

If the steering lock remains engaged when you press the engine switch to change the ignition mode to ON, the information display in the instrument cluster shows the following message and you cannot start the engine. If this happens, press the engine switch, turning the steering wheel to right or left.

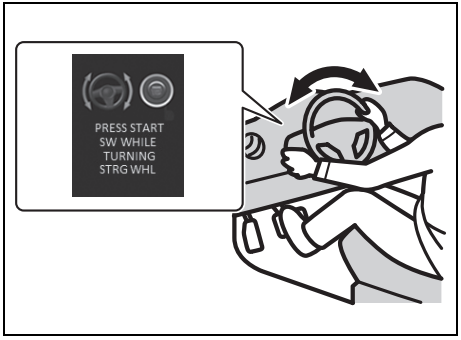

74U050036

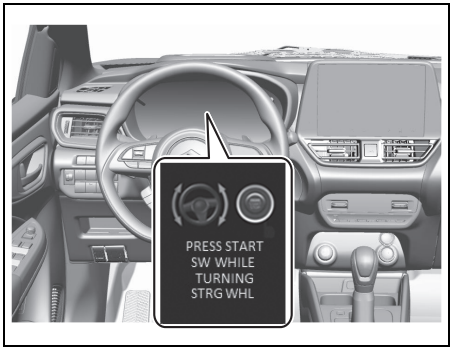

74U050037

NOTE:
The steering lock may not be released and the immobilizer/keyless push start system warning light turns on if some load is applied on the steering wheel. If this happens, turn the steering wheel system to the right or left to relieve it from the load before you press the engine switch again to change to the desired ignition mode.

Immobilizer System

This system is designed to help prevent vehicle theft by electronically disabling the engine starting system.
The engine can be started only with your vehicle's original immobilizer ignition key or keyless push start system remote controller, which has an electronic identification code programmed in it. The key or remote controller communicates the identification code to the vehicle when the ignition switch is turned to "ON" position or the engine switch is pressed to change the ignition mode to ON. If you need to make spare keys or remote controllers, see an authorized SUZUKI dealer or a qualified workshop. The vehicle must be programmed with the correct identification code for the spare. A key made by an ordinary locksmith will not work.

In the case you can start the engine, when you turn the ignition switch to "LOCK" position or press the engine switch to change the ignition mode to ON, the immobilizer system will be released and the immobilizer/keyless push start system (If equipped) warning light will turn on for about 2 seconds and then it will turn off.

When you turn the ignition switch to "LOCK" position or press the engine switch to change the ignition mode to LOCK (OFF), the immobilizer system will operate.

NOTICE

If the immobilizer system is modified or removed, it cannot be properly operated. Do not modify or remove the immobilizer system.

NOTE:
This immobilizer system is maintenance-free.

Immobilizer/Keyless Push Start System (if equipped) Warning Light

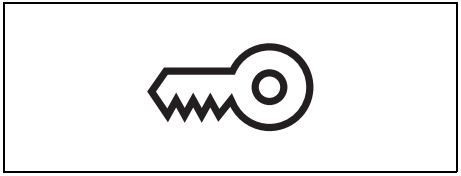

74TBX04081

If the immobilizer/keyless push start system (if equipped) warning light blinks when the ignition switch is in "ON" position or the ignition mode is ON, the engine will not start.

NOTE:
If the immobilizer/keyless push start system (if equipped) warning light blinks or comes on, a message may be shown on the information display.

For vehicles without a keyless push start system
If this light blinks, turn the ignition switch to "LOCK" position, and then turn it back to "ON" position.
If the light still blinks after the ignition switch is turned back to "ON" position, there may be something wrong with your key or with the immobilizer system. Ask an authorized SUZUKI dealer or a qualified workshop to have the system inspected.

For vehicles with a keyless push start system
If this light blinks, change the ignition mode to LOCK (OFF), and then change it back to ON. Also refer to "If the master warning indicator light blinks and the engine cannot be started" in "Starting / Stopping Engine (Vehicle with Keyless Push Start System) (if equipped)" in "OPERATING YOUR VEHICLE" section.
If the light still blinks after the ignition mode is changed back to ON, there may be something wrong with your key or with the immobilizer system. Ask an authorized SUZUKI dealer or a qualified workshop to have the system inspected.

The immobilizer/keyless push start system (if equipped) warning light may also blink if the remote controller is not in the vehicle when you close the door or attempt to start the engine.

NOTE:
- *If you lose your immobilizer ignition key or remote controller, ask an authorized SUZUKI dealer or a qualified workshop as soon as possible to deactivate the lost one, and to make a new key or remote controller.*
- *If you own other vehicles with immobilizer keys, keep those keys away from the ignition switch or the engine switch when using your SUZUKI vehicle. Otherwise, the engine may not be started because they may interfere with your SUZUKI vehicle's immobilizer system.*
- *If you attach any metal objects to the immobilizer key or remote controller, it may not start the engine.*

NOTICE

The immobilizer key and remote controller are sensitive electronic instruments. To avoid damaging them:
- **Do not expose them to impacts, moisture or high temperature such as on the dashboard under direct sunlight.**
- **Keep them away from magnetic objects.**

Ignition Key Reminder (if equipped)

A buzzer sounds intermittently to remind you to remove the ignition key if it is in the ignition keyhole when the driver's door is opened.

Pedal

Automatic transmission

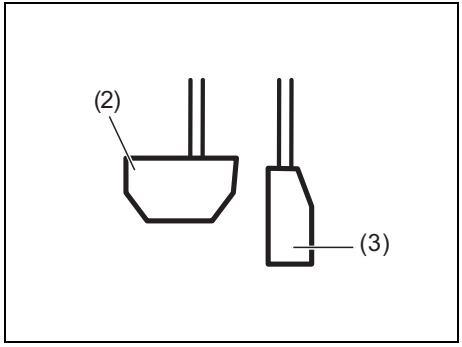

74TBX05016

Brake Pedal (2)

Your vehicle is equipped with either front and rear disc brakes or front disc brakes and rear drum brakes. Depressing a brake pedal applies both sets of brakes.

You may hear occasional brake squeal when you apply the brakes. This is a normal condition caused by environmental factors such as temperature, humidity, snow or dust, etc.

⚠ WARNING

If brake squeal is excessive and occurs each time the brakes are applied, you should have the brakes checked by an authorized SUZUKI dealer or a qualified workshop.

⚠ WARNING

Do not apply brakes continuously or rest your foot on the brake pedal. This will result in overheating of the brakes which could cause unpredictable braking action, longer stopping distances, or permanent brake damage.

Accelerator Pedal (3)

An accelerator pedal controls the speed of the engine. Depressing the accelerator pedal increases power output and speed.

NOTE:
Your vehicle is equipped with Brake Override System. If you depress both the accelerator pedal and the brake pedal simultaneously, the engine power output may be suppressed.

Keyless Push Start System (if equipped)

Provided the keyless push start system remote controller is within the interior workable area, you can use the engine switch for starting the engine and selecting an ignition mode (ACC or ON). In addition, the following functions can be used:

- Keyless entry function. Refer to “Keyless Push Start System Remote Controller” in “BEFORE DRIVING” section for details.
- Locking and unlocking doors (including the tailgate) using a request switch. Refer to “Keyless Push Start System Remote Controller” in “BEFORE DRIVING” section for details.
- Immobilizer (anti-theft) function. Refer to “Immobilizer System” in this section for details.

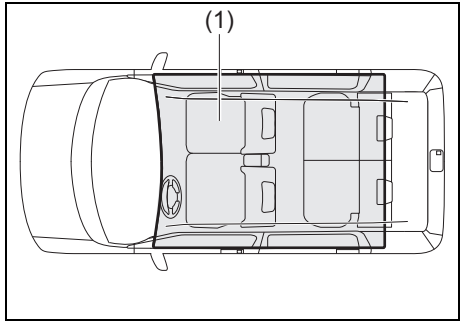

74U050038

(1) Interior workable area
The interior workable area is defined as all the interior spaces except for the space on the instrument panel or in the luggage compartment.

NOTE:
- *Even when the remote controller is in the interior workable area, if it is in any of the following conditions, you may not be able to start the engine or select the ignition modes, and the remote controller outside warning may be given.*
  - *–The remote controller's battery is low.*
  - *–The remote controller is affected by strong radio wave or noise.*
  - *–The remote controller is in contact with or covered by a metallic object.*
  - *–The remote controller is in the secluded stowages such as the glove box or a door pocket.*
  - *–The remote controller is in the sun visor pocket or on the floor.*
- *Even when the remote controller is outside the interior workable area, if it is in any of the following conditions, you may be able to start the engine or select the ignition mode. The remote controller outside warning may not be given at that time.*
  - *–The remote controller is outside the vehicle but very close to a door.*
  - *–The remote controller is on the instrument panel.*

Engine Switch Illumination

The engine switch is illuminated (lit) in the following situations:
- When the engine is off and the driver's door is open, or for 15 seconds after the driver's door is closed. The illumination will fade out after 15 seconds passed.
- While the headlights and/or the position lights are on, the illumination will turn on. The illumination will go out when the headlights and the position lights are turned off.

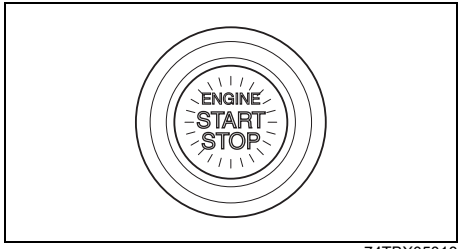

74TBX05018

NOTE:
To save the lead-acid battery, the illumination will be automatically turned off when both of the following conditions are simultaneously met:
- *The headlights and the position lights are turned off.*
- *15 minutes has elapsed since opening the driver's door.*

Selection of Ignition Modes

Press the engine switch to select ACC or ON mode as follows when you use an electric accessory or check the operation of instrument cluster without running the engine.

NOTE:
When selecting the ignition modes, the information display in the instrument cluster show certain messages. Refer to "Information Display" in the "INSTRUMENT CLUSTER" section.

1) Bring the keyless push start system remote controller with you and sit in the driver's seat.

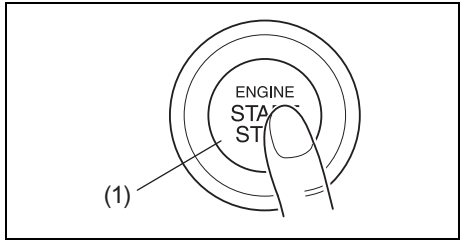

74TBX05019

2) Every time you press the engine switch, the ignition mode changes as follows.

Automatic transmission

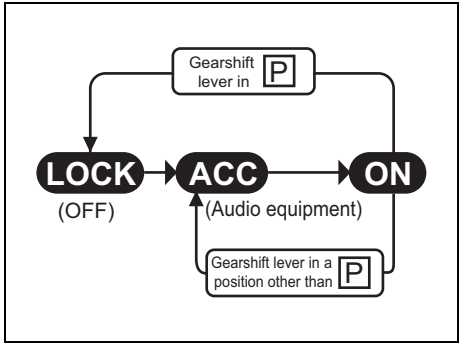

74TBX05021

If the "PUSH" indicator light blinks and the ignition modes cannot be selected (Instrument cluster Type A) (If equipped)

Your keyless push start system remote controller may not be sensed as being within the "interior workable area" (refer to the related explanation in this section). Try again after making sure you have the remote controller with you. If the ignition modes still cannot be selected, the battery of the remote controller may be discharged. To be able to select an ignition mode, you must then use the following method:

EXAMPLE

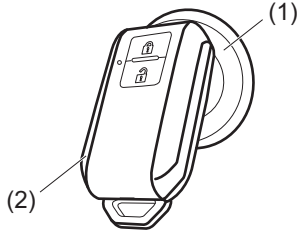

52RM30020

1) Without depressing the brake pedal and the clutch pedal, push the engine switch (1).
2) Within about 10 seconds during which the "PUSH" indicator light in the instrument cluster is blinking, touch the engine switch with LOCK button end of the remote controller (2) for about 2 seconds.

NOTE:

- *If you still cannot select the ignition modes, there may be some problems with the keyless push start system. Contact an authorized SUZUKI dealer for an inspection of the system.*
- *The immobilizer/keyless push start system warning light come on for about 5 seconds while the "PUSH" indicator light is blinking. Refer to "Warning and Indicator Lights" in the "INSTRUMENT CLUSTER" section for details.*
- *You may customize the system to cause the interior buzzer to sound once for the "remote controller out of sensing range" warning. To incorporate this customization, please contact an authorized SUZUKI dealer.*
- *If the battery of the remote controller is about to become completely discharged, the keyless push start system remote controller battery consumption warning light in the instrument cluster will come on for a few seconds when you press the engine switch to change the ignition mode to ON. Refer to "Keyless push start system remote controller battery consumption warning light (Instrument cluster Type A) (If equipped)" in "Keyless Entry System Transmitter / Keyless Push Start System Remote Controller" in the "BEFORE DRIVING" section for details.*

If the master warning indicator light ⚠ blinks and the ignition modes cannot be selected

Your keyless push start system remote controller may not be sensed as being within the interior workable area (refer to the related explanation in this section). Try again after checking that you have the remote controller with you. If the ignition modes still cannot be selected, the battery of the remote controller may be discharged. To select an ignition mode, you must then use the following method:

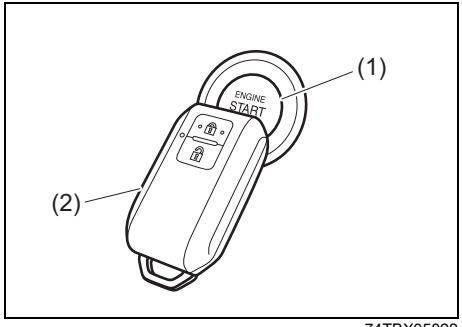

74TBX05022

1) Automatic Transmission – Without depressing the brake pedal, press the engine switch (1).

2) Within about 10 seconds while the master warning indicator light blinks and the information display in the instrument cluster shows the following message, touch the engine switch with the lock switch end of the remote controller (2) for about 2 seconds.

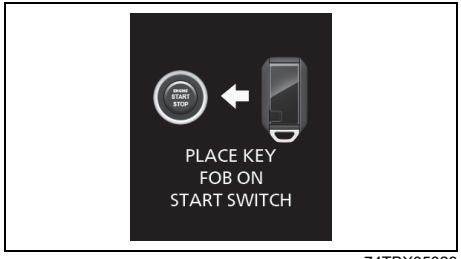

74TBX05023

While the master warning indicator light blinks, the immobilizer/keyless push system warning light will come on for about 5 seconds.

If you still cannot select the ignition modes, there may be the other problem such as the discharged lead-acid battery. In this case, consult an authorized SUZUKI dealer or a qualified workshop.

NOTE:

- *You may customize the system to cause the interior buzzer to sound once for warning that remote controller is out of sensing range. For this customization, consult an authorized SUZUKI dealer or a qualified workshop.*
- *If the battery of the remote controller is almost discharged, the information display in the instrument cluster shows the following message when you press the engine switch to change the ignition mode to ON. Refer to "Information Display" in "INSTRUMENT CLUSTER" section for details. For details on replacing the battery, refer to "Keyless Push Start System Remote Controller" in "BEFORE DRIVING" section.*

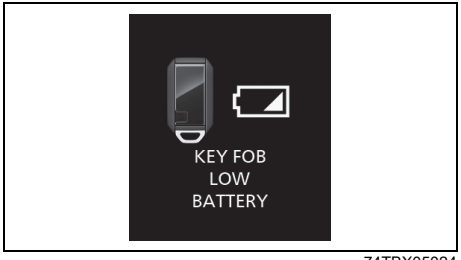

74TBX05024

Remote Controller Outside Warning

When either of the following conditions is met, the system causes the remote controller outside warning by sounding the interior and exterior buzzers. At the same time, the immobilizer/keyless push start system warning light comes on, the master warning indicator light blinks and the information display in the instrument cluster will show the corresponding message.

- Any door is opened and then closed while the remote controller is not inside the vehicle and the engine is running or the ignition mode has been changed to ACC or ON by pressing the engine switch.
- The remote controller is not inside the vehicle when you attempt to start the engine after changing the ignition mode to ACC or ON by pressing the engine switch.

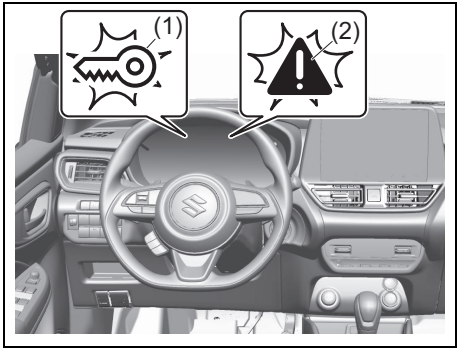

74U050039

(1) Immobilizer/keyless push start system warning light (blinks)
(2) Master warning indicator light (blinks)

If the warning is given, place the remote controller inside the vehicle as soon as possible.

- Any attempt to start the engine will fail while the warning is active. The message appearing in the information display in the instrument cluster will also indicate this condition. Refer to “Information Display” in the “INSTRUMENT CLUSTER” section for details.
- Normally, the immobilizer/keyless push start system warning light should go out and the master warning indicator light should stop blinking shortly after the remote controller is brought back inside the vehicle. If they remain lit and blinking, change the ignition mode to LOCK (OFF) by pressing the engine switch and then perform the engine starting operation. Refer to “Starting / Stopping Engine (Vehicle with Keyless Push Start System) (if equipped)” in this section.

NOTE:
Always keep the remote controller with you as the driver.

Starting / Stopping Engine (Vehicle without Keyless Push Start System) (if equipped)

Starting Engine

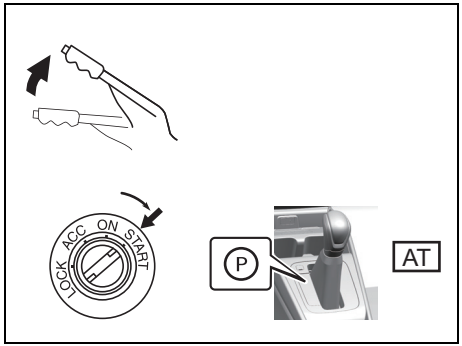

74U050041

1) Check that the parking brake is set fully.
2) Turn off such loads as the headlights and air conditioning system to facilitate starting of the engine.
3) Automatic Transmission:
   Check that the gearshift lever is in "P" (Park) position and keep depressing the brake pedal fully.
4) With your foot taken off the accelerator pedal, crank the engine by turning the ignition key to "START". Release the key immediately after the engine has started.

NOTICE

- **Release the key immediately after the engine has started or the starter can be damaged.**
- **For protection of a lead-acid battery and a starter motor, do not use the starter motor by turning the key to "START" for more than 12 seconds at a time. If the engine dose not start, turn the key to "LOCK" position and wait for more than 30 seconds before trying again. If the engine does not start after several attempts, consult an authorized SUZUKI dealer or a qualified workshop.**
- **Do not try to start the engine by pushing or towing the vehicle, or coasting down a hill. This starting method could result in damage to the catalytic converter or damage to other parts.**

Stopping Engine

⚠ WARNING

Except in cases of emergency, do not stop the engine while the vehicle is in motion. If you stop the engine while the vehicle is in motion, the steering wheel will lock and you will not be able to steer the vehicle. This may result in an accident. Avoid stopping the engine while driving.

Starting / Stopping Engine (Vehicle with Keyless Push Start System) (if equipped)

Starting Engine

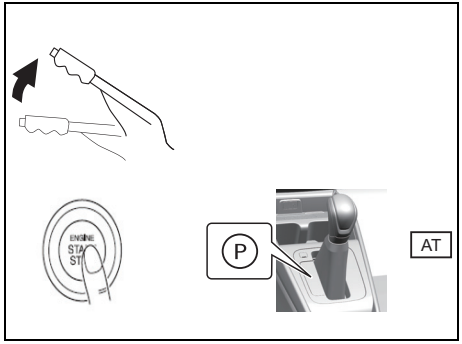

74U050042

1) Check that the parking brake is set fully.
2) Turn off such loads as the headlights and air conditioning system to facilitate starting of the engine.
3) Automatic Transmission:
   Check that the gearshift lever is in “P” (Park) position and keep depressing the brake pedal fully.
4) The “PUSH START SWITCH” message will appear in the information display in the instrument cluster.

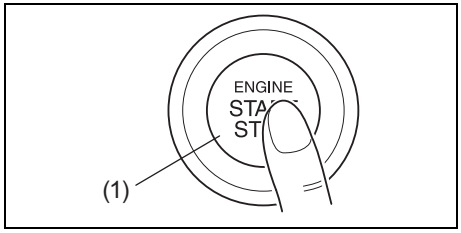

74TBX05019

5) With your foot taken off the accelerator pedal, push the engine switch (1). When the engine is started, the starter motor will automatically stop.
   - Even if you fail to start the engine, the starter motor will stop turning automatically after approximately 12 seconds. In this case, press the engine switch to select LOCK (OFF) mode and restart the engine.
   - If there is a problem with the system, the engine will not start automatically even if the switch is pressed. In case the starter motor does not turn or stops immediately, start the engine by the following procedure.
     a. Press the engine switch to select the ON mode.
     b. Perform the above procedure 1) to 3).
     c. Keep the engine switch pressed until the engine starts. Release your finger from the engine switch after the engine has started.

NOTICE

- **If the engine does not start, press the engine switch to select LOCK (OFF) mode and wait for more than 30 seconds before trying again, for protection of a lead-acid battery and a starter motor. If the engine does not start after several attempts, consult an authorized SUZUKI dealer or a qualified workshop.**
- **Do not try to start the engine by pushing or towing the vehicle, or coasting down a hill. This starting method could result in damage to the catalytic converter or damage to other parts.**

NOTE:
- *You do not need to keep the engine switch pressed to start the engine.*
- *Automatic transmission vehicles:*
  Automatic transmission vehicles have a starter interlock device. The engine starts when the gearshift lever is in either “P” or “N” position.
- *During the engine starting procedure, messages on the information display will help you. Refer to “Information Display” in “INSTRUMENT CLUSTER” section for details.*
- *When the engine stalls in intersection and railway crossing etc., restart the engine by usual procedure.*

Stopping Engine

- Depress the engine switch to stop the engine after the vehicle stopped completely.
- If the engine remains stopped for a while after it was stopped unexpectedly or was raced before stopping, a clicking sound may be heard from around the engine when it is restarted. This is not a malfunction. Always let the engine idle before stopping it.

⚠ WARNING

Except in cases of emergency, do not stop the engine while the vehicle is in motion. If you stop the engine while the vehicle is in motion, the steering wheel will lock and you will not be able to steer the vehicle. This may result in an accident. Avoid stopping the engine while driving.

Emergency Stop

In case of emergency, you can stop the engine by quickly pushing the engine switch more than 3 times, or pushing and holding the engine switch for more than 2 seconds while the vehicle is in motion.

NOTE:
Except in cases of emergency, do not stop the engine while the vehicle is in motion. The steering and braking operation will require more effort when the engine is stopped. Refer to "Braking" in this section.

If the Master Warning Indicator Light ⚠ Blinks and the Engine cannot be Started

Your keyless push start system remote controller may not be sensed as being within the interior workable area (refer to the related explanation in this section). Try again after checking that you have the remote controller with you. If the engine cannot be started, the battery of the remote controller may be discharged. To start the engine, you must then use the following method:

1) Automatic Transmission - Check that the gearshift lever is in "P" (Park) position and keep depressing the brake pedal fully.

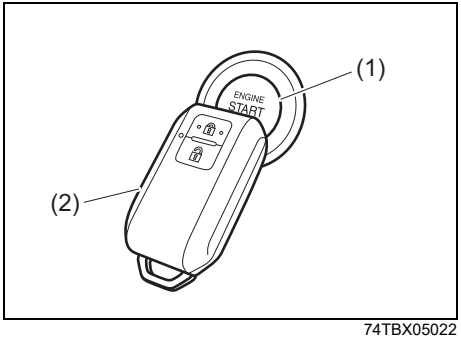

74TBX05022

2) If the following message is shown on the information display in the instrument cluster, press the engine switch (1).

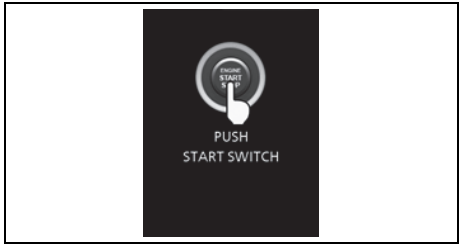

74TBX05027

3) Within about 10 seconds while the master warning indicator light blinks and the information display in the instrument cluster shows the following message, touch the engine switch with the lock switch end of the remote controller (2) for about 2 seconds.



74TBX05028

While the master warning indicator light blinks, the immobilizer/keyless push system warning light will come on for about 5 seconds.
If you still cannot start the engine, there may be the other problem such as the discharged lead-acid battery. In this case, consult an authorized SUZUKI dealer or a qualified workshop.

NOTE:

- *You may customize the system to cause the interior buzzer to sound once for warning that remote controller is out of sensing range. For this customization, consult an authorized SUZUKI dealer or a qualified workshop.*
- *If the battery of the remote controller is almost discharged, the information display in the instrument cluster shows the following message when you press the engine switch to change the ignition mode to ON. Refer to "Information Display" in "INSTRUMENT CLUSTER" section for details. For details on replacing the battery, refer to "Keyless Push Start System Remote Controller" in "BEFORE DRIVING" section.*

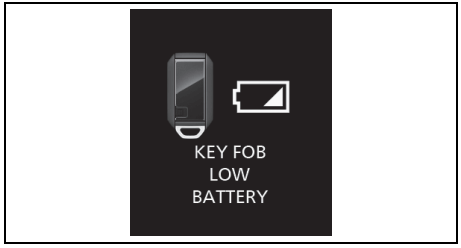

74TBX05029

Parking Brake Lever

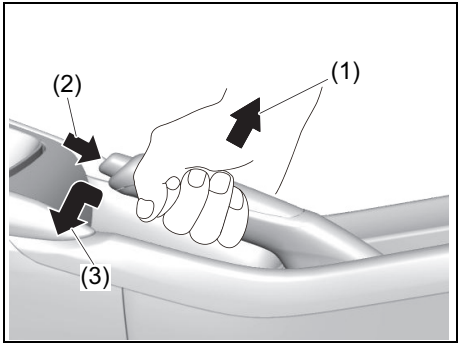

74U050043

(1) To set
(2) To release
(3) To release

The parking brake lever is located between the front seats. To set the parking brake, depress the brake pedal and pull the parking brake lever all the way up. To release the parking brake, depress the brake pedal and pull up slightly on the parking brake lever, push the button on the end of the lever with your thumb, and lower the lever to its original position.

For automatic transmission vehicles, always set the parking brake before moving the gearshift lever to "P" (PARK) position. If you park on an incline and shift into

"P" before setting the parking brake, the weight of the vehicle may make it difficult to shift out of "P" or a sound and a shock may occur when you are ready to drive the vehicle. These are not malfunctions.

When preparing to drive the vehicle, move the gearshift lever out of "P" position before releasing the parking brake.

⚠ WARNING

- **Never drive your vehicle with the parking brake on: rear brake effectiveness can be reduced from overheating, brake life may be shortened, or permanent brake damage may result.**
- **If the parking brake does not hold the vehicle securely or does not fully release, have your vehicle inspected immediately by an authorized SUZUKI dealer or a qualified workshop.**
- **Always set the parking brake fully before leaving your vehicle or it may move, causing injury or damage. When parking, check that the gearshift lever is in one of the following positions:**
  – "P" (Park) for automatic transmission vehicles.
  Remember, even though the transmission is in gear or in Park, you must set the parking brake fully.

⚠ WARNING

- **When parking the vehicle in extremely cold weather, the following procedure should be used:**
  1) Set the parking brake.
  2)Automatic transmission – shift into "P" (Park) and turn off the engine.
  3) Get out of the vehicle and put chocks under the wheels.
  4) Release the parking brake.
  When you return to your vehicle, first set the parking brake, and then remove the wheel chocks.
- **Do not leave cigarette lighters, spray cans, soft drink cans or plastic articles (such as glasses, CD cases, etc.) in sun-heated vehicle. The temperature inside the vehicle may cause as follows:**
  – Gas may leak from a cigarette lighter or spray can and may lead to a fire.
  – The glasses, plastic cards or CD cases, etc. may deform or crack.
  – Soft drink cans may fracture.

Parking Brake Reminder Buzzer

A buzzer sounds intermittently to remind you to release the parking brake if you start the vehicle without fully releasing the parking brake. Check that the parking brake is fully released and the brake system warning light turns off.

Precaution for Parking

When Moving the Vehicle

When moving the vehicle, start the engine.

⚠ WARNING

If you coast with the engine off, stronger force than normal is required when turning the steering wheel or depressing the brake pedal, resulting in an accident.
Do not coast on a downhill slope with the engine off.

When Taking a Nap in the Vehicle

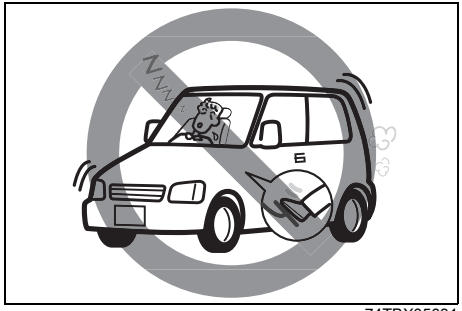

74TBX05031

Do not take a nap in the vehicle with the engine running.

⚠ WARNING

- **Exhaust gases can enter the vehicle due to surrounding conditions and wind direction, possibly causing carbon monoxide poisoning.**
- **The gearshift lever could change unintentionally, or the accelerator pedal could be depressed accidentally, causing an accident.**
- **If you were to accidentally step on the accelerator pedal while you are asleep, the engine and the exhaust system could overheat, resulting in danger of fire.**

With the Engine Running, the Cooling Fan (Radiator Fan) may Rotate Suddenly

The cooling fan (radiator fan) in the engine compartment may automatically stop and rotate depending on the conditions of the engine coolant temperature.

⚠ WARNING

If you get close to a rotating cooling fan (radiator fan), your hands, hair and clothing may get caught in it, resulting in personal injury.
With the engine running, even when the cooling fan (radiator fan) stops, it may automatically rotate. Therefore, do not get close to the cooling fan (radiator fan).

Do not Park the Vehicle Near Flammable Materials



74TBX05032

⚠ WARNING

If you park the vehicle near flammable materials, the exhaust pipes and exhaust gas will get hot, resulting in danger of fire.
Do not park the vehicle near flammable materials such as dry grass, paper waste and plywood.

When Leaving the Vehicle, Stop the Engine and Lock Doors

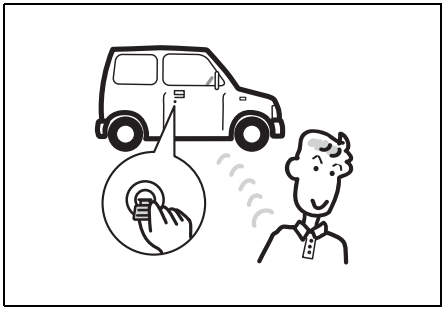

74TBX05033

Even when leaving the vehicle for a short time, do not leave cash or valuables inside, as there is a risk of theft.

⚠ WARNING

If you leave the vehicle unattended with the engine running, problems such as fire or theft can occur.
Do not leave the vehicle unattended with the engine running.

Do not Leave the Computer and the Mobile Phone in the Vehicle

There is the possibility of theft, or these items could become damaged due to moisture, humidity or temperature change.

Do not Leave Lighters and Eyeglasses in the Vehicle

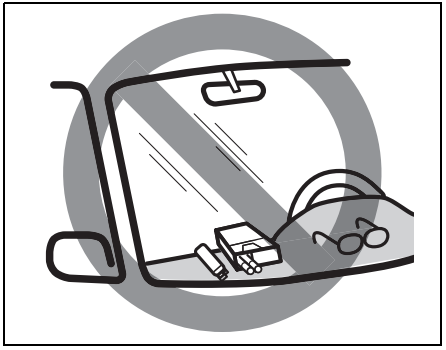

74U050044

⚠ WARNING

- **As the inside of the vehicle becomes hotter when parking in areas where strong sunlight causes increased temperature, there is the danger of spontaneous ignition of lighters or spray cans, fire due to explosion, the deformation or cracking of eyeglasses, plastic cards or CD cases, or the rupture of carbonated beverage cans. When parking in those areas, do not leave lighters, spray cans, plastic products (eyeglasses, plastic cards, CD cases, etc.) or carbonated beverage cans in the vehicle.**
- **When items get pushed around or when the seats are moved, it is possible that gas could escape and lead to a fire. Do not place accessories such lighters or spray cans with exposed operating parts in the glove box, in storage compartments, between the seats, on the floor, etc.**

Using Transmission

⚠ WARNING

Do not hang any items on the gearshift lever and do not use the gearshift lever as a handrest. Otherwise, it could prevent proper operation of the gearshift lever and cause its malfunction, resulting in an accident.

4-speed Automatic Transmission

Gearshift lever

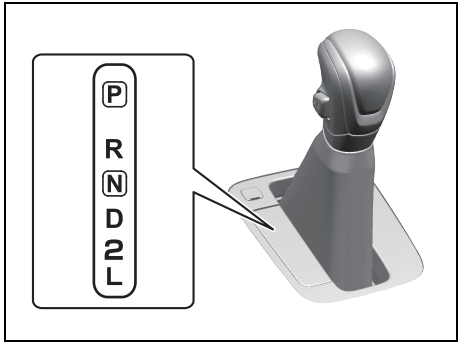

74U050045

The gearshift lever is designed so that it cannot be shifted out of “P” position unless the ignition mode is ON and the brake pedal is depressed.

Use the gearshift lever positions as follows:

P (Park)
Use this position to lock the transmission when the vehicle is parked or when starting the engine. Shift into Park only when the vehicle is completely stationary.

R (Reverse)
Use this position to reverse the vehicle from stop. Make sure that vehicle is completely stationary before shifting into Reverse.

N (Neutral)
Use this position for starting the engine if the engine stalls and you need to restart it while the vehicle is moving. You may also shift into Neutral and depress the brake pedal to hold the vehicle stationary during idling.

D (Drive)
Use this position for all normal driving.

With the gearshift lever in “D” range you can get an automatic downshift by pressing the accelerator pedal. The higher the vehicle speed is, the more you need to press the accelerator pedal to get a downshift.

2 (Low 2)
Use this position to provide extra power when climbing hills, or to provide engine braking when going down hills.

L (Low 1)
Use this position to provide maximum power when climbing steep hills or driving through deep snow or mud, or to provide maximum engine braking when going down steep hills.

⚠ WARNING

Always depress the brake pedal before shifting from "P" (Park) (or "N" (Neutral) if the vehicle is stationary) to a forward or reverse gear, to help prevent the vehicle from moving unexpectedly when you shift.

NOTE:
When you shift the gearshift lever into "P" and stop the engine before applying the parking brake, if you try to restart the engine and shift the gearshift lever into the position other than "P", it may reduce gearshift lever capability, or unusual sound and shock may occur. However, this is not abnormal.

The gearshift lever has a lock mechanism to help prevent accidental shifting. Shift the gearshift lever as follows:

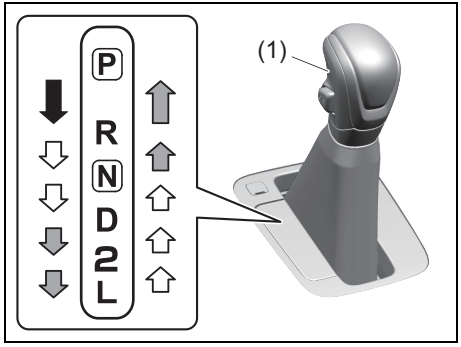

74U050046

(1) knob button

⇩	Shift with the knob button (1) pushed in and the brake pedal depressed.
⇧⇩	Shift with the knob button (1) pushed in.
⇧⇩	Shift without the knob button (1) pushed in.

⚠ CAUTION

For the vehicles with the keyless push start system, if you cannot press the engine switch firmly, the engine may not start.
Even if you shift the gearshift lever into "R" or "D" position without the engine running, the vehicle does not move.
If you try to move your vehicle under the above-mentioned condition, the vehicle may move in unexpected directions on a slope, etc. This may cause an accident. When starting the engine, press the engine switch firmly. Also, make sure that the engine is running by checking engine sound or warning and indicator lights.

NOTICE

- **Do not shift the gearshift lever into "R" while moving forward, or the transmission may be damaged. If you shift into "R" when the vehicle speed is over 10 km/h (6 mph), the transmission will not shift into reverse.**
- **Be sure to take the following precautions to help avoid damage to the automatic transmission:**
  - **Make sure that the vehicle is completely stationary before shifting into "P" or "R".**
  - **Do not shift from "P" or "N" to "R", "D" or "L" when the engine is running above idle speed.**
  - **Do not rev the engine with the transmission in a drive position ("R", "D", "2" or "L") and the front wheels not moving.**
  - **Do not use the accelerator to hold the vehicle on a hill. Use the vehicle's brakes.**

NOTE:

- *Always shift the gearshift lever without pushing in the knob button (1) except when you shift from "P" to "R", from "D" to "2", from "2" to "L", from "N" to "R" or from "R" to "P". If you always push in the knob button (1) when shifting the gearshift lever, you could shift into "P", "R", "2" or "L" by mistake.*
- *If driver's or passenger's knee hits the gearshift lever while driving, the lever could move and the gear could be changed unexpectedly.*

Overdrive off switch

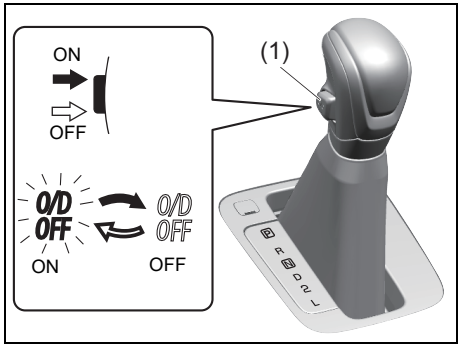

74U050047

(1) Overdrive off switch

The transmission is a 4-speed (3-speed plus overdrive) automatic transmission. By operating the overdrive off switch (1), the transmission can be converted to a 3-speed automatic transmission that will not move to the overdrive position. To convert the transmission to the 3-speed mode, push in the overdrive off switch (1) and release it.

To return the transmission to the 4-speed mode, push in the overdrive off switch (1) again.

When the ignition switch is turned to the "ACC" position, the transmission in the 3-speed mode is converted to the 4-speed mode automatically.

The 3-speed mode is suitable for the following driving conditions:

- Driving on hilly, winding roads
  - You can drive more smoothly with less frequent gear changing
- Going down a steep hill
  - Some engine braking is provided

If You cannot Shift Automatic Transmission Gearshift Lever out of "P" (PARK)

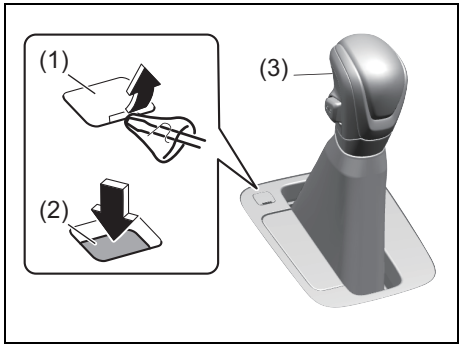

74U050048

The automatic transmission vehicles have an electrically operated park-lock feature. If the vehicle's lead-acid battery is discharged, or there is some other electrical failure, the automatic transmission cannot be shifted out of Park in the normal way. Jump starting may correct the condition. If not, follow the procedure described below. This procedure will permit shifting the transmission out of Park.

1) Be sure the parking brake is firmly applied.
2) If the engine is running, stop the engine.
3) Make sure the key is in "ON" or "ACC" position.
4) Remove the cover (1) by using a flat-bladed screwdriver covered with a soft cloth as shown.
5) With the release button (2) pushed by the key or the flat end rod, push the knob button (3) and shift the gearshift lever to the desired position.

This procedure is for emergency use only. If repeated use of this procedure is necessary, or the procedure does not work as described, take your vehicle to an authorized SUZUKI dealer or a qualified workshop for repair.

6-speed Automatic Transmission

Gearshift lever

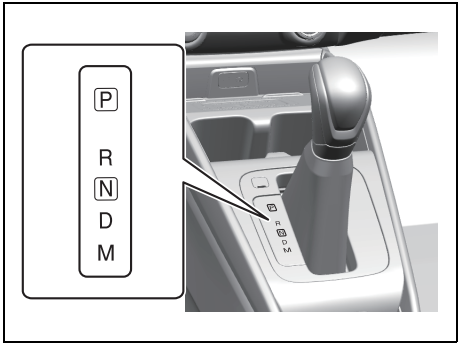

74U050049

The gearshift lever is designed so that it cannot be shifted out of "P" position unless the ignition mode is ON and the brake pedal is depressed.

⚠ WARNING

Always depress the brake pedal before shifting from "P" (Park) (or "N" (Neutral) if the vehicle is stationary) to a forward or reverse gear, to help prevent the vehicle from moving unexpectedly when you shift.

The gearshift lever has a lock mechanism to help prevent accidental shifting. Shift the gearshift lever as follows:

Models with manual mode

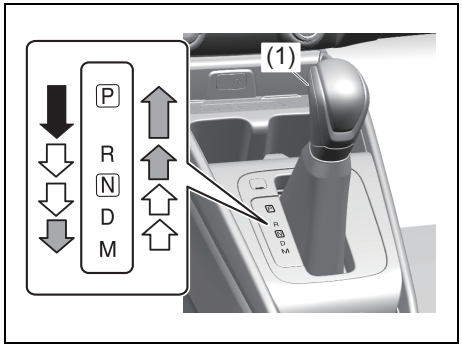

74U050050

(1) Knob button

⬇	Shift with the knob button (1) pushed in and the brake pedal depressed.
⇧⇩	Shift with the knob button (1) pushed in.
⇧⇩	Shift without the knob button (1) pushed in.

NOTE:

- *Always shift the gearshift lever without pushing in the knob button (1) except when you shift from "P" to "R", from "D" to "M", from "N" to "R" or from "R" to "P". If you always push in the knob button (1) when shifting the gearshift lever, you could shift into "P", "R" or "M" by mistake.*
- *If driver's or passenger's knee hits the gearshift lever while driving, the lever could move and the gear could be changed unexpectedly.*

Use the gearshift lever positions as described below:

P (Park)
Use this position to lock the transmission when the vehicle is parked or when starting the engine. Shift into Park only when the vehicle is completely stationary.

R (Reverse)
Use this position to reverse the vehicle from stop. Make sure that vehicle is completely stationary before shifting into Reverse.

N (Neutral)
Use this position for starting the engine if the engine stalls and you need to restart it while the vehicle is moving. You may also shift into Neutral and depress the brake pedal to hold the vehicle stationary during idling.

D (Drive)
Use this position for all normal driving.

With the gearshift lever in "D" range you can get an automatic downshift by pressing the accelerator pedal. The higher the vehicle speed is, the more you need to press the accelerator pedal to get a downshift.

M (manual mode)
(models with manual mode)
Use this position for driving in the manual mode. Refer to "Manual mode" later in this section for details on how to use the manual mode.

NOTE:
If you move the gearshift lever to a lower gear while driving faster than the maximum allowable speed for the lower gear, the transmission will not actually downshift until your speed drops below the maximum speed for the lower gear.

⚠ CAUTION

If you cannot press the engine switch firmly, the engine may not start.
Even if you shift the gearshift lever into "R" or "D" position without the engine running, the vehicle does not move.
If you try to move your vehicle under the above-mentioned condition, the vehicle may move in unexpected directions on a slope, etc. This may cause an accident. When starting the engine, press the engine switch firmly. Also, make sure that the engine is running by checking engine sound or warning and indicator lights.

NOTICE

- **Do not shift the gearshift lever into "R" while moving forward, or the transmission may be damaged. If you shift into "R" when the vehicle speed is over 11 km/h (7 mph), the transmission will not shift into reverse.**
- **Be sure to take the following precautions to help avoid damage to the automatic transmission:**
  - **Make sure that the vehicle is completely stationary before shifting into "P" or "R".**
  - **Do not shift from "P" or "N" to "R", "D" or "M" when the engine is running above idle speed.**
  - **Do not rev the engine with the transmission in a drive position ("R", "D" or "M") and the front wheels not moving.**
  - **Do not use the accelerator to hold the vehicle on a hill. Use the vehicle's brakes.**

NOTE:
When you shift the gearshift lever into "P" and stop the engine before depressing the parking brake pedal, if you try to restart the engine and shift the gearshift lever into the position other than "P", it may reduce gearshift lever capability, or unusual sound and shock may occur. However, this is not abnormal.

Manual mode
(models with manual mode)
The automatic transmission can shift gears automatically. When using the manual mode, you can shift gears in the same manner as conventional manual transmission.
To use the manual mode, shift the gearshift lever from "D" to "M".

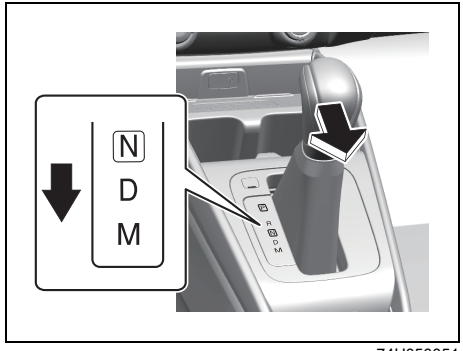

74U050051

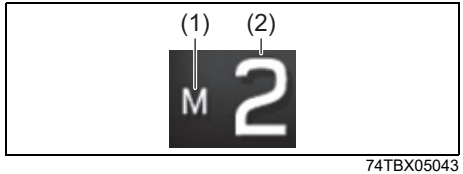

74TBX05043

(1) Manual mode indicator
(2) Gear position

The information display shows the manual mode indicator and the current gear position.

NOTE:
- *The indicated gear position in the information display when you shift from "D" to "M" is the gear position that was selected automatically when the gearshift lever was in "D".*
- *You can change to the manual mode temporarily by pulling the shift paddle on the steering wheel toward you when the gearshift lever is in "D".*

Shifting in the manual mode
You can shift gears from 1st to 6th depending on driving speed.

NOTE:
- *When the driving speed becomes slow, the gear shifts down automatically, and when the vehicle stops, the gear position will be in 1st gear without shifting the gearshift lever.*
- *In Manual mode, even if the engine is redlined, the gear is not shifted up automatically.*

NOTE:
When you change gear, sometimes the transmission may not shift to the desired gear but a buzzer sounds instead. This is to maintain good driveability and to protect the transmission.

Using the shift paddle

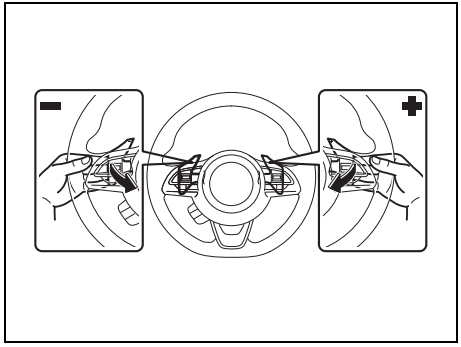

74TBX05044

To shift up, pull "+" side shift paddle, located on right side of the steering wheel, toward you. When you release your finger from the switch, the switch will return to the original position.

To shift down, pull "–" side shift paddle, located on left side of the steering wheel, toward you. When you release your finger from the switch, the switch will return to the original position.

NOTE:
- *To shift gears continuously, release your finger from the shift paddle, then pull the shift paddle again. You cannot shift gears continuously while holding the shift paddle toward you.*
- *When you pull the both "+" and "–" shift paddle simultaneously, the gear may not shift.*

Canceling the manual mode
To cancel the manual mode, shift the gearshift lever from "M" to "D".

Temporary manual mode
Pull the shift paddle toward you when driving with the gearshift lever in "D". The information display shows the manual mode indicator and the current gear position.

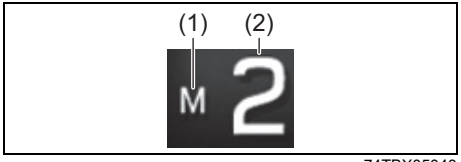

74TBX05043

(1) Manual mode indicator
(2) Gear position

The temporary manual mode will be canceled automatically in the following situations.

- When you press and hold the accelerator pedal for a certain period of time without shifting gears.
- When driving speed becomes slow.
- In case of high accelerator pedal input temporary manual mode is not canceled.
- In case of no accelerator pedal input temporary manual mode cancellation happens only when driving speed becomes slow.

If you cannot Shift Automatic Transmission Gearshift Lever out of "P" (PARK)

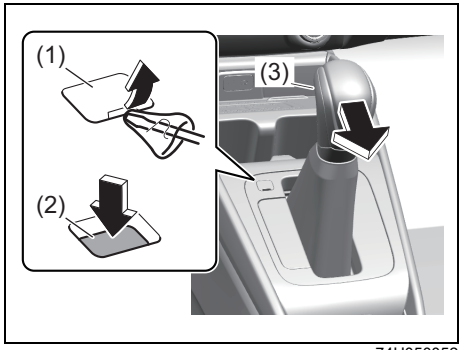

74U050052

The automatic transmission vehicles have an electrically operated park-lock feature. If the vehicle's lead-acid battery is discharged, or there is some other electrical failure, the automatic transmission cannot be shifted out of Park in the normal way. Jump starting may correct the condition. If not, follow the procedure described below. This procedure will permit shifting the transmission out of Park.

1) Be sure the parking brake is firmly applied.
2) If the engine is running, stop the engine.
3) Make sure the ignition mode is ON or ACC.
4) Remove the cover (1) by using a flat-bladed screwdriver covered with a soft cloth as shown.
5) With the release button (2) pushed by the key or the flat end rod, push the knob button (3) and shift the gearshift lever to the desired position.

This procedure is for emergency use only. If repeated use of this procedure is necessary, or the procedure does not work as described, take the vehicle to an authorized SUZUKI dealer or a qualified workshop.

Gearshift Indicator (if equipped)



74TBX05046

In the following case, the gearshift indicator is indicated in the information display when the ignition switch is in the "ON" position or the ignition mode is "ON".

- When the gearshift lever is in a position other than "N" (Neutral).

The electronic control system monitors driving condition (such as vehicle speed and/or engine revolution), and it recommends gearshift for your driving with indications on display.

If UP/DOWN arrow and the gear position other than currently selected are indicated on the display while driving, we recommend you to shift up or down the gear to indicated position. It is the optimal gear position for a driving condition that reduces the over revolution and stress to the engine, and improves fuel consumption.

NOTE:
When cruise control system SET indicator is ON, Gear Shift Indicator may not be displayed.

⚠ WARNING

The gearshift indicator is designed to indicate optimal gear position for your driving, however, a driver will not be relieved from the duty of care of driving operation or gear change with this indicator.
To drive safe, do not gaze the gearshift indicator, pay attention to your driving situation and shift up or down if necessary.

NOTE:
- *The gearshift indicator is not indicated when the gear position is in "N" (Neutral).*
- *If you depress the clutch pedal while UP/DOWN arrow is indicated, the indication will disappear.*
- *In ordinary driving, UP arrow will disappear when you release your foot from the accelerator pedal.*
- *The indication of gearshift indicator timing may differ depending on the vehicle condition and/or driving situation even in the same vehicle speed and engine revolution.*
- *If ESP® system is working, the gear shift indicator will disappear temporarily.*

Example of the gearshift indicator

Indication	Description
 74TB05031	Lower gear position is selected for the vehicle speed and/or engine revolution. Changing to a higher gear position is recommended. • In this case, shifting up to 4th gear position is recommended.
 74TB05032	Current gear position is optimal for the vehicle speed and/or engine revolution. • In this case, 3rd gear position is the best.
 74TB05033	Higher gear position is selected for the vehicle speed and/or engine revolution. Changing to a lower gear position is recommended. • In this case, shifting down to 2nd gear position is recommended.

SHVS (Smart Hybrid Vehicle by Suzuki) (if equipped)

SHVS has an Integrated Starter Generator (ISG) instead of conventional generator to get a better fuel consumption.

Integrated Starter Generator (ISG) is a generator which incorporates a motor function.

The ISG has the following 3 functions.
- Deceleration energy regenerating function
- Engine power assist function
- Starter motor function

⚠ WARNING

Dripping engine oil, brake fluid and coolant, etc. to the ISG may cause a fire or malfunction. Do not spill them when pouring.

Deceleration Energy Regenerating Function

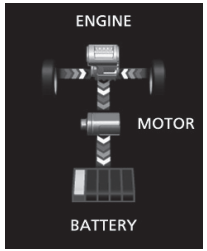

74TBX05047

While decelerating your vehicle, the ISG generates electricity without engine power. This reduces engine loads and improves fuel consumption.

While decelerating your vehicle, deceleration energy regenerating function will be activated when the following conditions are satisfied.
- Gearshift lever is not in “N” (Neutral).
- Clutch pedal is not depressed.
- Inside temperature of lead-acid battery is in normal condition.
- Lithium-ion battery is not fully charged and inside temperature is in normal condition.

etc.

NOTE:
The deceleration energy regenerating function may not work depending on vehicle conditions.

Engine Power Assist Function

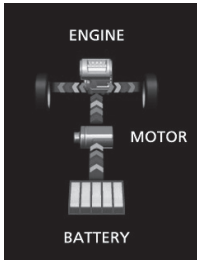

74TBX05048

While the vehicle is running, ISG assists engine power as a motor in the following limited condition. This reduces engine loads and improves fuel consumption.

While the vehicle is running with the engine speed at approximately 3900 rpm or less, engine power assist function will be activated when all of the following conditions are satisfied.

- SHVS system and ENG A-STOP system are working properly. (ENG A-STOP OFF indicator light is not blinking.)
- Clutch pedal is not depressed.
- ESP® is not activated.
- Accelerator pedal is excessively depressed.
- Lead-acid battery and lithium-ion battery are fully charged and each inside temperature is in normal condition.

- Engine coolant temperature is in normal condition.
- ISG inside temperature is in normal condition.

NOTE:
- *The engine power assist function may not work depending on vehicle conditions.*
- *The engine power assist function may not work while the battery capacity is being checked right after the engine start, and so on.*
- *The subjective feeling of the horn sound, head lamp illumination and A/C blower speed is likely to be different during vehicle take off, deceleration energy regeneration function and engine power assist function operation.*

Starter Motor Function

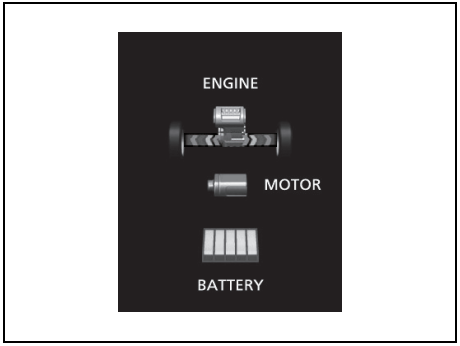

74TBX05049

After the engine auto stop by the ENG A-STOP system, the engine will be restarted using a cranking power of the ISG.

The starting with the ISG is quiet compared with starting by the conventional starter motor.

NOTE:
When you restart the engine by pushing the engine switch, the conventional starter motor is used and you will hear a gear engagement sound.

Lithium-ion Battery Indication

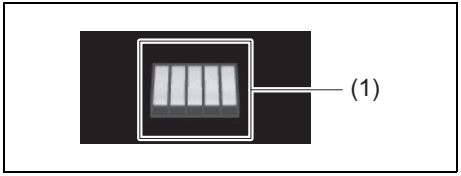

74TBX05050

The segments in the lithium-ion battery indicator (1) give an approximate indication of the charge of the lithium-ion battery. The number of segments that appear in the indication increases or decreases with the charge of the lithium-ion battery.

NOTE:
The indicator gives an approximate indication. The indication may be delayed or differ from the actual charge of the lithium-ion battery under certain conditions, for example, when the outside temperature is low.
Also, the minimum segment is 1 bar and the bar will never be 0. Even when 1 bar is shown, the battery level may be close to be flat.

Deceleration Energy Regenerating Indicator Light

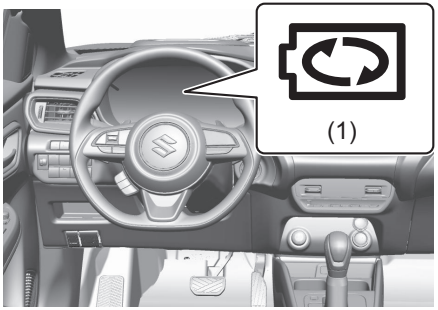

74U050053

When the deceleration energy regenerating function is working, the deceleration energy regenerating indicator light (1) comes on.

NOTE:
If the gearshift lever is in the "N" (Neutral) position, this light does not come on.

ENG A-STOP System (Engine Auto Stop Start System) (if equipped)

The ENG A-STOP system (engine auto stop start system) automatically stops the engine while waiting briefly at a traffic light, etc., and automatically restarts the engine afterward. This system helps reduce emissions, improve fuel consumption and lower engine noise.

This system stops the engine temporarily under specific conditions. Before parking the vehicle for an extended period of time or leaving the vehicle, properly apply the parking brake and stop the engine with the engine switch.

Once the specific conditions are met, the engine will stop automatically after the vehicle has stopped. However, the engine will not be stopped automatically until confirmation of the system function is finished.

NOTE:
If your vehicle is equipped with the auto air conditioning system, you can change the automatic engine stop condition via the information display. Refer to "Setting Mode" (P.4-29).

⚠ CAUTION

- **Do not get out of the vehicle while the engine is automatically stopped by the ENG A-STOP system. Doing so may lead to an accident.**
  - **– Automatic transmission vehicle – If the driver's seat belt is unfastened, even if the brake pedal is pressed down, or the driver's door is opened, the engine will be restarted to warn you that the engine was stopped automatically by the ENG A-STOP system.**
- **If the engine does not restart automatically after having been stopped automatically by the ENG A-STOP system, push the engine switch to start the engine. Trying to move the vehicle when the engine has not yet restarted requires a strong force to turn the steering wheel or depress the brake pedal, potentially leading to an accident.**

NOTICE

The vehicle equipped with this system uses a dedicated high-performance lead-acid battery that supports ENG A-STOP system. Accordingly, observe the instructions listed below. If these instructions are not observed, the system may not actuate properly or the lead-acid battery may die prematurely.

- **When replacing the lead-acid battery, use a SUZUKI GENUINE battery specified in the Specification.**
- **Do not draw power from the lead-acid battery terminals for electrical products.**

Lithium-ion Battery

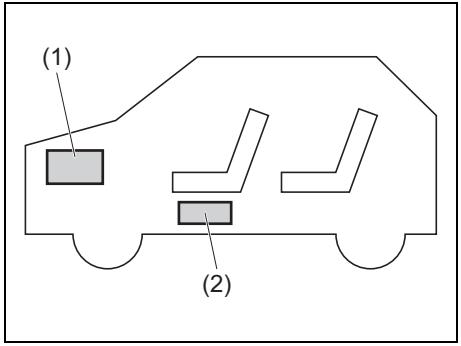

74TBX050116

(1) Battery (lead-acid battery)
(2) Lithium-ion battery

This lithium-ion battery is used exclusively for the vehicle equipped with SHVS, and located below the front left side seat.

- Just like a battery (lead-acid battery), the lithium-ion battery also discharges gradually.
  To prevent the lithium-ion battery from dying, you must charge the lithium-ion battery by driving continuously for at least 30 minutes once a month.
- The lithium-ion battery is maintenance-free.
- To replace or dispose of the lithium-ion battery, consult an authorized SUZUKI dealer or a qualified workshop.

⚠ WARNING

Wrong handling of the lithium-ion battery may result in fire, electric shock or system malfunction. Accordingly, observe the instructions listed below:

- **Do not dismount or disassemble the lithium-ion battery.**
- **Do not let the lithium-ion battery come in contact with water or other liquids.**
- **Do not apply strong impact on the lithium-ion battery.**
- **Do not step on the lithium-ion battery or put articles on the lithium-ion battery.**
- **Do not disconnect the lithium-ion battery terminals or draw power from the terminals for electrical products.**

Automatic Stopping/Restarting of the Engine

Automatic transmission vehicles

1) Depress the brake pedal to decelerate while the gearshift lever is in the “D” position will automatically stop the engine before the vehicle is stopped (approximately 9 km/h *(5.6 mph)* or less). At the same time, the ENG A-STOP indicator light (green) (1) will remain on.
   - The engine is not stopped automatically if all of the conditions to stop the engine automatically are not met, even if the brake pedal is pressed down to decelerate.
     For details on the conditions for automatically stopping the engine, refer to “Conditions to stop the engine automatically” in this section.
   - To ensure safety when the engine is stopped automatically, the interior buzzer may sound and the engine will stall, or the engine may be restarted.

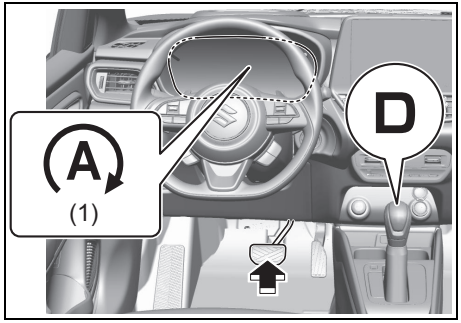

74U050056

NOTE:

- *The engine is not stopped automatically when decelerating without depressing the brake pedal, for example, by using engine braking.*
- *The engine may be stopped automatically when the vehicle is stopped, even if the engine is not stopped automatically before stopping the vehicle (approximately 9 km/h (5.6 mph) or less).*
- *Electrical components, such as the navigation system or audio system, can be used while the engine has been stopped automatically, however, the air conditioner switches to the ventilation position.*

For the automatic heating and air conditioning system, airflow is limited (only under automatic operation) when the engine is stopped automatically, in order to improve the cooling and heating performance.

2) When you remove your foot from the brake pedal, regardless of whether it is before or after stopping the vehicle, the engine is restarted and the ENG A-STOP indicator light (green) (1) goes off.
   - The engine is restarted automatically if the conditions to restart the engine automatically are met, even if the brake pedal is depressed.
     For details on the conditions for automatically restarting the engine, refer to “Conditions to restart the engine automatically” in this section.

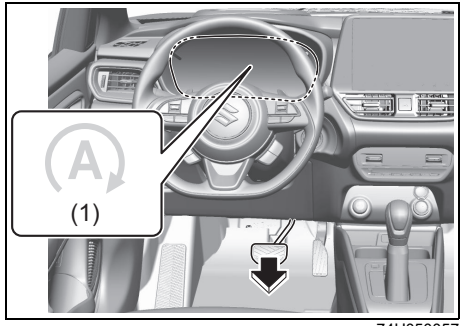

74U050057

NOTE:
The hill hold control system is activated when the engine is restarted automatically.

Precautions of When the Engine is Stopped Automatically

⚠ WARNING

Do not perform any of the following operations while the engine has been stopped automatically. This may result in an accident.

	Operation/Vehicle Condition	Solution
Common	Engine hood opened • The interior buzzer sounds 2 times. • After the engine is stopped automatically, it stalls. • The ENG A-STOP indicator light (green) goes off.	To restart the engine, follow the procedure below. 1) Set the parking brake firmly, “P” position (for automatic transmission). 2) Securely close the engine hood. 3) Turn the ignition switch or press the engine switch to restart the engine.
Automatic transmission	Driver’s seat belt unfastened, or driver’s door opened • The engine is restarted automatically. • The ENG A-STOP indicator light (green) blinks 5 times, then goes off.	Before driving, close the door and buckle the seat belt. In addition, before getting out of the vehicle, follow the procedure below. 1) Set the parking brake firmly, and then place the gearshift lever in the “P” position. 2) When the vehicle will be stopped for a long time or when you will leave the vehicle unattended, press the engine switch to stop the engine.

NOTE:
The following indicator lights in the instrument cluster do not come on when the engine is stopped automatically.
- *Malfunction indicator light, electric power steering light, oil pressure light, charging light*

Operating Conditions of ENG A-STOP System

Standby conditions
If all of the following conditions are met while driving, the automatic engine stop will be permitted.

When the engine is started		• The engine is started with the engine hood securely closed.
When driving	Common	• The ENG A-STOP system is not deactivated (OFF) (For details, refer to “ENG A-STOP OFF Switch (if equipped)” in this section.) • The battery is charged more than a certain amount, and the temperature inside the battery is within the specified range. (#1) • The engine coolant temperature is within the specified range. • The driver’s seat belt is fastened. • The driver’s door is securely closed. • The engine hood is securely closed. • There is no signal to prevent stopping the engine from any electronic control systems other than the ENG A-STOP system (#2) < Automatic heating and air conditioning system> • The air from the outlets is sufficiently cooled while cooling or sufficiently warmed while heating. • The defroster is turned off.
	Auto-matic transmis-sion	• The gearshift lever is in the “D” or “N” position. (#3) • The manual mode is not in use. • There is no signal to prevent stopping the engine from any electronic control systems other than the ENG A-STOP system.

#1: If the battery is discharged, for example, if the vehicle has not been used for a long time or electrical components, such as the navigation system or audio system, have been used for a long time while the engine was stopped, it may take some time until the system can be in standby.

#2: If any of the warning and indicator lights affecting the ENG A-STOP system come on, the engine will not be stopped automatically.

#3: The system will be in standby even though the gearshift lever is in “N” position, however, the engine will be stopped automatically when the vehicle is stopped, instead of when it is decelerating (approximately 9km/h *(5.6 mph)* or less) before stopping.

Conditions to stop the engine automatically
If all of the following conditions are met while the standby conditions are met, the engine is stopped automatically when the vehicle is decelerating before stopping or when the vehicle is stopped.

When decelerating before stopping	Automatic transmission	• The ABS or ESP® system has not been activated. • Brake booster vacuum pressure is normal. • The brake pedal is sufficiently depressed. (#) • The vehicle is decelerating to a speed of approximately 9 km/h *(5.6 mph)* or less. • The accelerator pedal is not depressed. • The vehicle is not being driven on a steep hill. • The brake is not applied abruptly.
When the vehicle is stopped	Common	• The ABS or ESP® system has not been activated. • Brake booster vacuum pressure is normal.
	Automatic transmission	• The brake pedal is sufficiently depressed. (#) • The accelerator pedal is not depressed. • The vehicle is not stopped on a steep hill.

#: The engine may not be stopped automatically if the brake pedal was depressed lightly or strongly.

Conditions to restart the engine automatically
If any of the following vehicle conditions occur or operations are performed while the engine is stopped automatically, the engine is restarted automatically and the ENG A-STOP indicator light (green) goes off.

Common		• The ENG A-STOP system is deactivated (OFF). • The battery continues to be discharged. (#1) • A malfunction was detected in this system.(#2) • Brake booster vacuum pressure is low. (#1) • The temperature of the air from the outlets changes greatly, or the cooling and heating performance is insufficient. (#1) • The temperature selector was greatly set toward COOL while cooling or greatly set toward HOT while heating. (#1) • The defroster is turned on. (#1) • The driver's seat belt is unfastened. (#1) • The driver's door is opened. (#1) • The vehicle is moving along a slope. (#1) • Some time (about 3 minutes) has passed since the engine was stopped automatically. (#1)
Automatic transmission		• The foot is removed from the brake pedal.(#3) • The accelerator pedal is depressed. • The gearshift lever is placed in the "P", "R" or "M" position.
When decelerating	Automatic transmission	• The engine hood was opened. • The gearshift lever is placed in the "N" position. • The slope of the road suddenly changes. (#1)
When the vehicle is stopped	Automatic transmission	• After the gearshift lever is placed in the "N" position, it is returned to the "D" position.

#1: After the ENG A-STOP indicator light (green) blinks, it goes off. Also, the interior buzzer may sound at the same time.
#2: Depending on the situations of malfunction, it is a normal restart or the restart as #1.
#3: The engine may be restarted automatically when the brake pedal is depressed lightly. In this case, when the brake pedal is depressed again, the engine is stopped automatically and the ENG A-STOP indicator light (green) comes on again.

ENG A-STOP OFF Switch (if equipped)

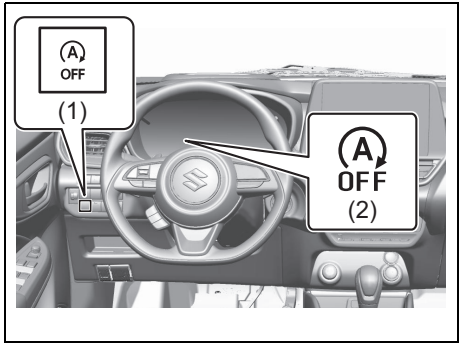

74U050058

The ENG A-STOP system can be deactivated.

- To deactivate the system, press the ENG A-STOP OFF switch (1) to turn on ENG A-STOP OFF light (2).
- To activate the system once again, press the switch (1) again to turn off the indicator.
- Every time the engine is stopped manually, the system is enabled again and the ENG A-STOP OFF light (2) goes off.

NOTE:
Pressing the ENG A-STOP OFF switch (1) during the automatic engine stop will restart the engine automatically and the ENG A-STOP OFF light (2) will come on.

ENG A-STOP OFF Light (if equipped)

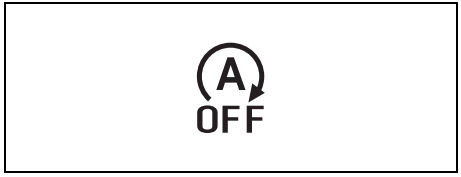

74TBX050122

This indicator comes on in the information display.

- This indicator comes on when the ENG A-STOP system is deactivated.
- The indicator blinks when the engine switch is pressed to change the ignition mode to ON, if one of the conditions listed below is met (The ENG A-STOP system or the SHVS system does not actuate correctly while the indicator is blinking). Have the system inspected immediately by an authorized SUZUKI dealer or a qualified workshop.
  - If there is something wrong with the ENG A-STOP system, SHVS system or the lithium-ion battery.
  - An engine component (ISG) or the lead-acid battery is due for replacement.

NOTE:
If the indicator blinks during the automatic engine stop, the engine may shut down

Information Message

The information display shows the messages to let you know certain problems of the ENG A-STOP system.

Information message	Cause and remedy
 76TM050013	The ENG A-STOP system cannot stop the engine automatically because something of the actuation conditions is not met. For details, refer to “Operating Conditions of ENG A-STOP System” in this section.
 76TM050014	The engine is restarting automatically because one of the following automatic engine restart conditions is met. • The temperatures at air conditioner outlets have changed considerably after the automatic engine stop to the point of affecting the cooling/heating performance. • The lead-acid battery has discharged substantially. • Some time has elapsed after the start of the automatic engine stop.
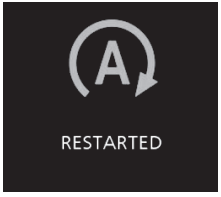 76TM050015	The engine restarted automatically because one of the following automatic engine restart conditions is met. • The negative pressure of the brake booster has dropped.

Information message	Cause and remedy
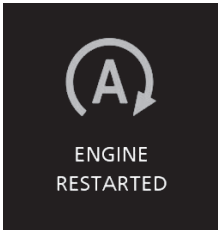 76TM050012	The engine restarted automatically because one of the following automatic engine restart conditions is met. • The defroster is turned on. • The driver's seat belt is released. • The driver's door is opened. • The vehicle is started to move on a slope, etc.
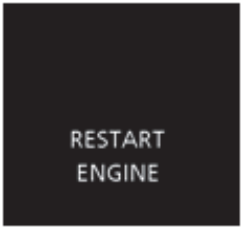 76TM050016	The engine shut down because one of the following operations is performed during the automatic engine stop. • The hood is opened. Restart the engine by usual operation. Refer to "Starting / Stopping Engine (Vehicle with Keyless Push Start System) (if equipped)" in this section for details.

Cruise Control (if equipped)

The cruise control system allows you to maintain a steady speed without keeping your foot on the accelerator pedal. The controls for operating the cruise control system are on the steering wheel.

You can use the cruise control system under the following conditions:

- For Automatic transmission vehicle, the gearshift lever is in “D” position, or the gear position is in 3rd, 4th, 5th, or 6th in the manual mode.
- The vehicle speed is about 40 km/h *(25 mph)* or higher.

⚠ WARNING

To help avoid loss of vehicle control, do not use the cruise control system when driving in heavy traffic, on slippery or winding roads, or on steep downhills.

Setting Cruising Speed

Cruise control switch

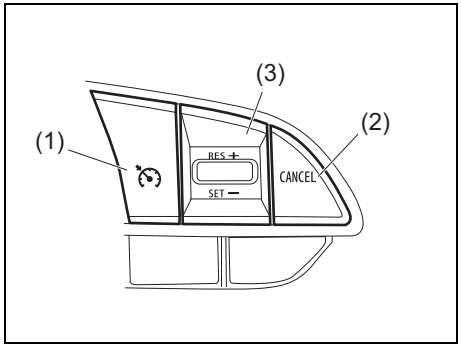

74TBX05052

(1) Cruise switch
(2) “CANCEL” switch
(3) “RES +/SET –” switch

Instrument cluster Type A

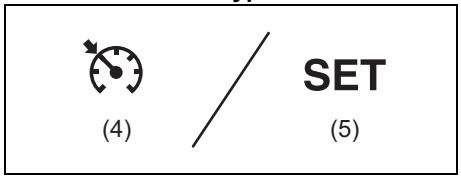

74TBX05054

(4) Cruise indicator light
(5) “SET” indicator light

Instrument cluster Type B without DSBS II

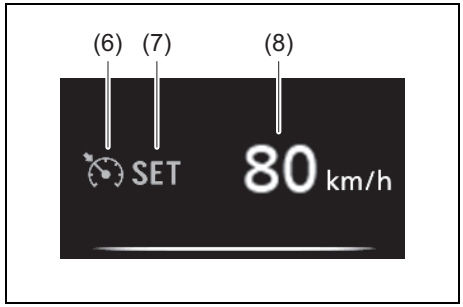

74TBX05055

(6) Cruise indicator
(7) “SET” indicator
(8) Set speed indication

1) Turn on the cruise control system by pushing cruise switch (1). When the cruise indicator light (4) (for instrument cluster type A), cruise indicator (6) (for instrument cluster type B without DSBS II) comes on, you can set cruising speed.
2) Accelerate or decelerate to the desired speed.
3) Push down the "RES +/SET –" switch (3), "SET" indicator light (5) (for instrument cluster type A), "SET" indicator (7) (for instrument cluster type B without DSBS II) comes on. Also, set speed indication (8) (for instrument cluster type B without DSBS II) comes on at the same time. Take your foot off the accelerator pedal and the set speed will be maintained.

⚠ WARNING

If the cruising speed is set by accident, you cannot decelerate or could loose control of the vehicle. This could lead to an accident, resulting in severe injury or death.
Turn off the cruise control system and check that cruise indicator light (4) or cruise indicator (6) is off when the system is not in use.

NOTE:
Established cruising speed may differ a little from the speed meter indication depending on the road conditions.

Changing Speed Temporarily

When the cruising speed is maintained, you can temporarily accelerate or decelerate.

To accelerate, depress the accelerator pedal. When you take your foot off the pedal, your vehicle will return to the set speed.

To decelerate, depress the brake pedal. The set speed will be canceled and "SET" indicator light (5), "SET" indicator (7) will go off.
To resume the previously set speed, push up the "RES +/SET –" switch (3) and turn on "SET" indicator light (5), "SET" indicator (7) again when vehicle speed is above 40 km/h *(25 mph)*. The vehicle will accelerate to the previously set speed and maintain its speed.

NOTE:
For Automatic Transmission vehicle, when the cruising speed is maintained, you cannot decelerate by using the engine brake even if you downshift from higher gear to 3rd in the manual mode.
To decelerate while the cruise control is on, depress the brake pedal or push down the "RES +/SET –" switch (3).

Changing Cruising Speed

Using the accelerator pedal
To reset at a faster cruising speed, accelerate to the desired speed using the accelerator pedal and push down the "RES +/SET –" switch (3). The new speed will be maintained.

Using the brake pedal
To reset at a slower cruising speed, decelerate to the desired speed using the brake pedal and push down the "RES +/SET –" switch (3). The new speed will be maintained.

NOTE:
When the brake pedal is depressed, "SET" indicator light (5), "SET" indicator (7) will go off until you reset the cruising speed.

Using "RES +/SET –" switch
To reset at a faster cruising speed, press repeatedly or hold push up the "RES +/SET –" switch (3). Vehicle speed will steadily increase. When you release the switch, the new speed will be maintained.

To reset at a slower cruising speed, press repeatedly or hold push down the "RES +/SET –" switch (3) until the vehicle has slowed to the desired speed, and then release the switch. The new speed will be maintained.

NOTE:
- *You can adjust the set speed by approximately 1 km/h (1 mph) by pushing "RES +/SET –" switch quickly.*
- *When the current vehicle speed is about 10 km/h (6 mph) or more faster than the previously set speed, the cruising speed cannot be decreased even if the "RES +/SET –" switch (3) is pushed down.*
- *When the current vehicle speed is about 10 km/h (6 mph) or more slower than the previously set speed, the cruising speed cannot be increased even if the "RES +/SET –" switch (3) is pushed up.*

Canceling Cruise Control

"SET" indicator light (5), "SET" indicator (7) will go off and the cruise control will be canceled temporarily with the following conditions:

- Push "CANCEL" switch (2).
- Depress the brake pedal.
- For automatic transmission vehicle, the gear position is changed to "L"
- For automatic transmission vehicle, down-shift from 3rd to 2nd in the manual mode.
- The vehicle speed falls more than about 20 percent from the set speed.
- Any time the vehicle speed falls below 40 km/h *(25 mph)*.
- When the vehicle skids and ESP® is activated.

To resume the previously set speed, push up the "RES +/SET –" switch (3) and turn on "SET" indicator light (5), "SET" indicator (7). The vehicle speed must be above 40 km/h *(25 mph)* when the vehicle is not under the above conditions.

To turn off the cruise control system, push cruise switch (1) and check that the cruise indicator light (4), cruise indicator (6) is off.

Also, if the malfunction indicator light in the instrument cluster comes on or blinks, the cruise control system will be turned off.

NOTE:
If you turn off the cruise control system, the previously set speed in the memory is cleared. Reset your cruising speed again.

SUZUKI SAFETY SUPPORT (if equipped)

SUZUKI SAFETY SUPPORT consists of the driving assist systems and contributes to a safe and comfortable driving experience.

⚠ WARNING

SUZUKI SAFETY SUPPORT

SUZUKI SAFETY SUPPORT is designed to under the assumption that the driver will drive safely, and is designed to help reduce the impact to the occupants in a collision and assist the driver under normal driving conditions.
As there is a limit to the degree of recognition accuracy and control performance that this system can provide, do not overly rely on this system. The driver is solely responsible for paying attention to the vehicle's surroundings and driving safely.
(Continued)

⚠ WARNING

(Continued)

For safe use

- **Do not overly rely on this system. The driver is solely responsible for paying attention to the vehicle's surroundings and driving safely. This system may not operate in all situations and provided assistance is limited. Over-reliance on this system to drive the vehicle safely may lead to an accident resulting in death or serious injury.**
- **Do not attempt to test the operation of the system, as it may not operate properly, possibly leading to an accident.**
- **When driver's attention is necessary or the system has malfunction, a warning message will appear or a warning buzzer will sound to get your attention for driving. When you see a warning message on the display, follow the message to drive safely.**
- **Depending on external noise, the volume of the audio system, etc. it may be difficult to hear the warning buzzer. Also, depending on the road conditions, it may be difficult to recognize the operation of the system.**

(Continued)

⚠ WARNING

(Continued)

When it is necessary to disable the system

In the following situations, make sure to disable the system.
Failure to do so may lead to the system not operating properly, possibly leading to an accident resulting in death or serious injury.

- **When the vehicle is tilted due to being overloaded or having a flat tyre**
- **When towing another vehicle**
- **When the vehicle is being transported by a truck, ship, train, etc.**
- **When the vehicle is raised on a lift and the tyres are allowed to rotate freely**
- **When inspecting the vehicle using a drum tester such as a chassis dynamometer or speedometer tester, or when using an on vehicle wheel balancer**
- **When the vehicle is driven in a sporty manner or off-road**
- **When using an automatic car wash**

(Continued)

⚠ WARNING

(Continued)

- **When a sensor is misaligned or deformed due to a strong impact being applied to the sensor or the area around the sensor**
- **When accessories which obstruct a sensor or light are temporarily installed to the vehicle**
- **When a compact spare tyre or tyre chains are installed to the vehicle or an emergency tyre puncture repair kit has been used**
- **When the tyres are excessively worn or the inflation pressure of the tyres is low**
- **When tyres other than the manufacturer specified size are installed**
- **When the vehicle cannot be driven stably, due to a collision, malfunction, etc.**

NOTE:
The system's detection of preceding vehicles, obstacles, parking (lot) lines and road signs is limited within field of view.
Also, it will take several seconds to become subject to control and alarm after an object enters the detectable field of view.

Driving assist systems

- Dual Sensor Brake Support II (DSBS II)
- Lane departure prevention system
- Vehicle swaying warning
- Lane keep assist
- High beam assist
- Adaptive cruise control
- Parking sensors
- Blind Spot Monitor (if equipped)
- Rear Cross Traffic Alert

⚠ WARNING

If accurate tyre rotation speed cannot be detected

If accurate tyre rotation speed cannot be detected such as the specified tyre pressure is not maintained, following functions may not operate properly.
- **Dual Sensor Brake Support II (DSBS II)**
- **Lane departure prevention system**
- **Lane keep assist**
- **Adaptive cruise control**

Sensors used by SUZUKI SAFETY SUPPORT

Various sensors are used to obtain the necessary information for system operation.

Sensors which detect the surrounding conditions

Front

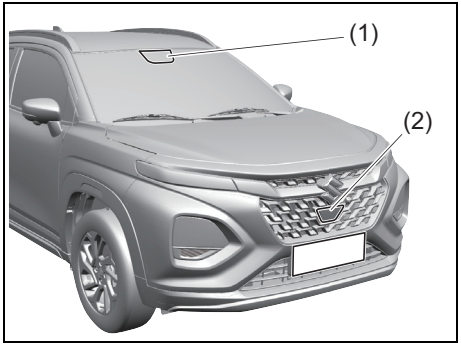

74U050081

(1) Front camera (DSBS II)
(2) Front radar (DSBS II)

Rear

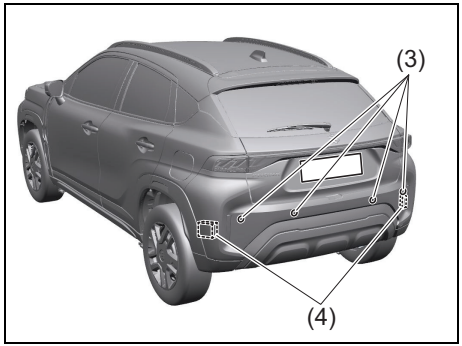

74U050021

(3) Ultrasonic sensors
(4) Radar sensor (rear)

⚠ WARNING

<u>To prevent malfunction of the front camera (DSBS II)</u>

Observe the following precautions. Failure to do so may lead to the front camera (DSBS II) not operating properly, possibly leading to an accident resulting in death or serious injury.

- **Always keep the windshield clean.**
  - **If the windshield is dirty or covered with an oily film, water droplets, snow, etc., clean the windshield.**
  - **Even if a glass coating agent is applied to the windshield, it will still be necessary to use the windshield wipers to remove water droplets, etc. from the area of the windshield in front of the front camera (DSBS II).**
  - **If the inner side of the windshield where the front camera (DSBS II) is installed is dirty, contact an authorized SUZUKI dealer or a qualified workshop for details.**

(Continued)

⚠ WARNING

(Continued)

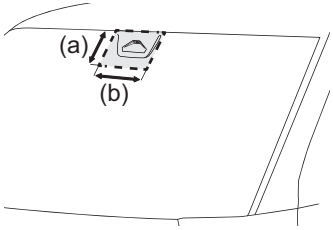

69T051250

(a) Approximately 15 cm (5.9 inch)
(b) Approximately 25 cm (9.8 inch)

- **Do not attach stickers (including transparent stickers) or other items to the area of the windshield in front of the front camera (DSBS II) (shaded area in the illustration).**
- **Do not place anything near the front of the windshield that may block the view of the front camera (DSBS II).**
- **If the part of the windshield in front of the front camera (DSBS II) is fogged up or covered with condensation or ice, use the windshield defogger to remove the fog, condensation, or ice.**

(Continued)

⚠ WARNING

(Continued)

- **If water droplets cannot be properly removed from the area of the windshield in front of the front camera (DSBS II) by the windshield wipers, replace the wiper insert or wiper blade.**
- **When replacing the front wiper body or blades, use the specified ones (for more information, contact an authorized SUZUKI dealer or a qualified workshop).**
- **Do not attach window tint to the windshield.**
- **Replace the windshield if it is damaged or cracked.**
  If the windshield has been replaced, recalibration of the front camera (DSBS II) will be necessary.
  Contact an authorized SUZUKI dealer or a qualified workshop for details.
- **Do not allow liquids to contact the front camera (DSBS II).**
- **Do not allow bright lights to shine into the front camera (DSBS II).**

(Continued)

⚠ WARNING

(Continued)

- **Do not damage the lens of the front camera (DSBS II) or allow it to become dirty.**
  When cleaning the inside of the windshield, do not allow glass cleaner to contact the lens of the front camera (DSBS II). Do not touch the lens of the front camera (DSBS II).
  If the lens of the front camera (DSBS II) is dirty or damaged, contact an authorized SUZUKI retailer or a qualified workshop for details.
- **Do not subject the front camera (DSBS II) to a strong impact.**
- **Do not change the position or orientation of the front camera (DSBS II) or remove it.**
- **Do not disassemble the front camera (DSBS II).**
- **Do not modify any parts around the front camera (DSBS II), such as the inside rear view mirror or ceiling.**
- **Do not attach accessories which may obstruct the front camera (DSBS II) to the hood, front grille, or front bumper.**
  Contact an authorized SUZUKI retailer or a qualified workshop for details.

(Continued)

⚠ WARNING

(Continued)

- **If a surfboard or other long object is to be mounted on the roof, make sure that it will not obstruct the front camera (DSBS II).**
- **Do not modify or change the headlights and other lights.**

<u>Front camera (DSBS II) installation area on the windshield</u>

If the system determines that the windshield may be fogged up, it will automatically operate the heater to defog the part of the windshield around the front camera (DSBS II). When cleaning, etc., be careful not to touch the area around the front camera (DSBS II) until the windshield has cooled sufficiently, as touching it may cause burns.

(Continued)

⚠ WARNING

(Continued)

To prevent malfunction of the front radar (DSBS II)

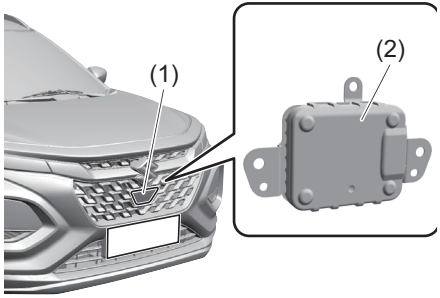

74U050082

(1) Front radar cover
(2) Front radar (DSBS II)

Observe the following precautions. Failure to do so may lead to the front radar (DSBS II) not operating properly, possibly leading to an accident resulting in death or serious injury.

- **Keep the front radar (DSBS II) and front radar cover clean at all times. Clean the front of the front radar (DSBS II) or the front or back of the front radar cover if it is dirty or covered with water droplets, snow, etc. Clean the front radar (DSBS II) and front radar cover with a soft cloth so as to not mark or damage them.**

(Continued)

⚠ WARNING

(Continued)

- **Do not attach accessories, stickers (including transparent stickers), aluminum tape, etc. to the front radar (DSBS II) or front radar cover and their surrounding area.**
- **Do not subject the front radar (DSBS II) or its surrounding area to impact. If the front radar (DSBS II), the front grille, or front bumper has been subjected to a impact, have the vehicle inspected by an authorized SUZUKI dealer or a qualified workshop.**
- **Do not disassemble the front radar (DSBS II).**
- **Do not modify or paint the front radar (DSBS II) or front radar cover, or replace them with anything other than SUZUKI genuine parts.**
- **In the following situations, recalibration of the front radar (DSBS II) will be necessary. Contact an authorized SUZUKI dealer or a qualified workshop for details.**
  - **When the front radar (DSBS II) is replaced**
  - **When the front bumper or the front grille has been replaced**

(Continued)

⚠ WARNING

(Continued)

When installing the license plate on the front bumper

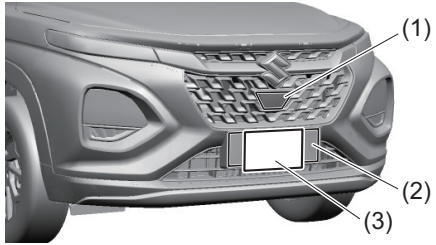

74U050023

(1) Front radar (DSBS II)
(2) Base plate
(3) License plate and license plate frame (sizes vary depending on the country and region)

- **The license plate and license plate frame (3) must be installed on the base plate (2).**
- **The front radar (DSBS II) (1) is positioned as shown in the illustration. If you do not install the license plate directly on the base plate (2), or install the license plate by protruding upwards from the base plate (2), emission/reception of the front radar (DSBS II) can be interrupted and the system may malfunction.**

(Continued)

⚠ WARNING

(Continued)

EXAMPLE



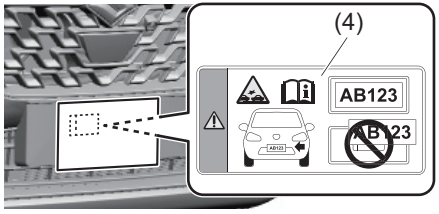

74U050024

- **Do not install the license plate and license plate frame (3) so that the warning label (4) is visible. Install them so that the warning label (4) is hidden. The license plate and license plate frame (3) must be installed securely on the base plate (2).**
- **We recommend you to ask your authorized SUZUKI dealer to install the license plate.**

NOTE:

Situations in which the front camera (DSBS II) and front radar (DSBS II) may not operate properly

- *When the height or inclination of the vehicle has been changed due to modifications*
- *When the windshield is dirty, fogged up, cracked or damaged*
- *When a sensor is extremely hot or cold*
- *When mud, water, snow, dead insects, foreign matter, etc., is attached to the front of the sensor*
- *When in inclement weather such as heavy rain, fog, snow, or a sandstorm*
- *When water, snow, dust, etc. is thrown up in front of the vehicle, or when driving through mist or smoke*
- *When the headlights are not illuminated while driving in the dark, such as at night or when in a tunnel*
- *When the lens of a headlight is dirty and illumination is weak*
- *When the headlights are misaligned*
- *When a headlight is malfunctioning*
- *When the headlights of another vehicle, sunlight, or reflected light shines directly into the front camera (DSBS II)*
- *When the brightness of the surrounding area changes suddenly*
- *When driving near a TV tower, broadcasting station, electric power plant, radar equipped vehicle, etc., or other location where strong radio waves or electrical noise may be present*
- *When a wiper blade is blocking the front camera (DSBS II)*
- *When in a location or near objects which strongly reflect radio waves, such as the following:*
  - *Tunnels*
  - *Truss bridges*
  - *Gravel roads*
  - *Rutted, snow-covered roads*
  - *Walls*
  - *Large trucks*
  - *Manhole covers*
  - *Metal plates*
  - *Guardrail*
- *When near a step or protrusion*
- *When a detectable vehicle is narrow, such as a small mobility vehicle*
- *When a detectable vehicle has a small front or rear end, such as an unloaded truck*

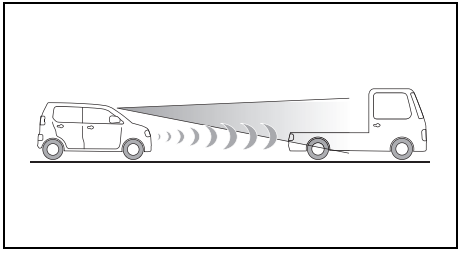

69TJ050010

- *When a detectable vehicle has a low front or rear end, such as a low bed trailer*

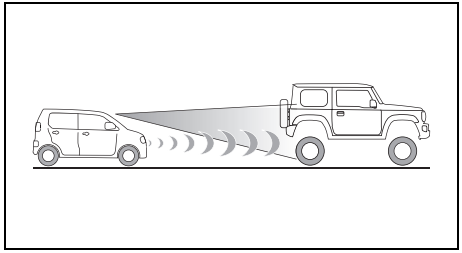

69TJ050080

- *When a detectable vehicle has extremely high ground clearance*
- *When a detectable vehicle is carrying a load which protrudes from its cargo area*
- *When a detectable vehicle has little exposed metal, such as a vehicle which is partially covered with cloth, etc.*
- *When a detectable vehicle is irregularly shaped, such as a tractor, sidecar, etc.*
- *When the distance between the vehicle and a detectable vehicle has become extremely short*
- *When a detectable vehicle is at an angle*
- *When a large amount of snow, mud, etc. is attached to a detectable vehicle*
- *When driving on the following kinds of roads:*
  - *– Roads with sharp curves or winding roads*
  - *– Roads with changes in grade, such as sudden inclines or declines*
  - *– Roads which are sloped to the left or right*
  - *– Roads with deep ruts*
  - *– Roads which are rough and unmaintained*
  - *– Roads which frequently undulate or are bumpy*
- *When the steering wheel is being operated frequently or suddenly*
- *When the vehicle is not in a constant position within a lane*
- *When parts related to this system, the brakes, etc. are extremely hot or cold, wet, etc.*
- *When the wheels are misaligned*
- *When driving on slick road surfaces, such as when it is covered with ice, snow, gravel, etc.*
- *When the course of the vehicle differs from the shape of a curve*
- *When the vehicle speed is excessively high when entering a curve*
- *When entering/exiting a parking lot, garage, car elevator, etc.*
- *When driving in a parking lot*
- *When driving through an area where there are obstructions which may contact your vehicle, such as tall grass, tree branches, a curtain, etc.*
- *When the wind is strong*

<u>Situations in which the lane may not be detected</u>

- *When the lane is extremely wide or narrow*
- *Immediately after changing lanes or passing through an intersection*
- *When driving in a temporary lane or lane regulated by construction*
- *When there are structures, patterns, shadows which are similar to lane lines in the surrounding*
- *When the lane lines are not clear or driving on a wet road surface*
- *When a lane line is on a curb*
- *When driving on a bright, reflective road surface, such as concrete*
- *When there are multiple white lines in the same lane*

<u>Situations in which some or all of the functions of the system cannot operate</u>

- *When a malfunction is detected in this system or a related system, such as the brakes, steering, etc.*
- *When the ESP® or other safety related system is operating*
- *When the ESP® or other safety related system is off*

<u>Changes in brake operation sound and pedal response</u>

- *When the brakes have been operated, brake operation sounds may be heard and the brake pedal response may change, but this does not indicate a malfunction.*
- *When the system is operating, the brake pedal may feel stiffer than expected or sink. In either situation the brake pedal can be depressed further. Further depress the brake pedal as necessary.*

Temporary stop or failure of the dual sensor
The following chart shows the temporary stop or failure of the dual sensor.

	Instrument cluster	Information display message	Dual sensor	
			Temporary stop	Failure
(1)		–	On	
(2)		–	On	
(3)		–	On	
(4)		–	On	
(5)		–	On	
(6)	–	"DSBS II SYSTEM STOPPED"	On	Off
(7)	–	"DSBS II SYSTEM DISABLED"	Off	On
(8)		–	Blinks	

(1) Dual Sensor Brake Support II (DSBS II) OFF indicator light
(2) Lane departure prevention indicator light
(3) Lane keep assist indicator light
(4) Adaptive cruise control indicator light
(5) High beam assist warning light (yellow)
(6) Indication of information display
(7) Indication of information display
(8) Master warning indicator

The message may be shown in the following situations:
- When driving the vehicle on a dark road without street lamps
- When driving the vehicle on a steep slope
- When trying to stop the vehicle in a garage
- When slowly approaching forward to an unicolor wall
- When slowly approaching forward to a shutter or a horizontal-striped wall

NOTE:
When the function of the dual sensor is temporarily stopped or malfunctioning, the following functions will be turned off.
- *Dual Sensor Brake Support II (DSBS II)*
- *Lane departure prevention system*
- *Lane keep assist*
- *Vehicle swaying warning*
- *High beam assist*
- *Adaptive cruise control*

Temporary stop of the dual sensor
Under the following situations, the function of the dual sensor stops temporarily.
When the situations are improved, the temporary stop of the function will be canceled.

Message	Cause	Remedy
“DSBS II SYSTEM STOPPED”	Under the following situations, the function of the dual sensor stops temporarily. • When the systems related to SUZUKI SAFETY SUPPORT stop temporarily • When the lead-acid battery has a voltage abnormality	Drive with caution until the cause is resolved. If the message remains on the information display after a while, consult with an authorized SUZUKI dealer or a qualified workshop.
“F CAMERA STOPPED (TEMP)”	Since the temperature of the body of front camera (DSBS II) is low or high, the function of the dual sensor stops temporarily.	• Drive with caution until the cause is resolved. • If the message remains on the information display after a while, consult with an authorized SUZUKI dealer or a qualified workshop. • If the front camera (DSBS II) is hot, such as after the vehicle is parked in the sun, use the air conditioning system to decrease the temperature around the front camera (DSBS II). • If the front camera (DSBS II) is cold, such after the vehicle is parked in an extremely cold environment, use the air conditioning system to increase the temperature around the front camera (DSBS II)
“F CAMERA STOPPED (LOW VIS)”	The dual sensor functions are temporarily stopped, because visibility from the front camera (DSBS II) is poor. Possible reasons are as follows • When there is bad weather such as heavy rain, fog or a blizzard • When the windshield in front of the front camera (DSBS II) is covered with dirt or foreign material • When the windshield in front of the front camera (DSBS II) is fogged up	Use the windshield wiper in bad weather. If the temporary stop of function is not canceled even if the windshield wiper is used, wait for the weather to improve. • Using the windshield wipers, remove the dirt or foreign material from the windshield. • Using the air conditioning system, defog the windshield. • Close the hood, remove any stickers, etc. to avoid blocking view of the front camera (DSBS II).

Message	Cause	Remedy
“CLEAN EXTERNAL RADAR”	The function of the system stops temporarily due to failure of radar. Possible reason is as follows. • When the surrounding areas of radar is covered with dirt, oil film or raindrops	Wipe off dirt, oil film and raindrops from the surrounding areas of radar with a soft cloth.
“F RADAR STOPPED (TEMP)”	Since the temperature of the body of front radar (DSBS II) is low or high, the function of the system stops temporarily.	Drive with caution until the cause is resolved. If the message remains on the information display after a while, consult with an authorized SUZUKI dealer or a qualified workshop.
“F RADAR STOPPED (CALIB)”	The function of the system stops temporarily due to bad angle of the front radar (DSBS II).	• If the message remains on the information display after a while, consult with an authorized SUZUKI dealer or a qualified workshop. • Check if there is any foreign material attached to the front radar (DSBS II) or front radar cover and clean them if necessary.

Dual Sensor Brake Support II (DSBS II)

The Dual Sensor Brake Support II (DSBS II) uses sensors to detect objects in the path of the vehicle. When the system determines that the possibility of a frontal collision with a detectable object is high, a warning operates to urge the driver to take evasive action. If the system determines that the possibility of a collision is extremely high, the brakes are automatically applied to help avoid the collision or help reduce the impact of the collision.
The Dual Sensor Brake Support II (DSBS II) can be disabled/enabled and the warning timing can be changed. Refer to "Dual Sensor Brake Support II (DSBS II) OFF switch" (P.5-65).

⚠ WARNING

For safe use

- **Driving safely is solely the responsibility of the driver. Pay careful attention to the surrounding conditions in order to ensure safe driving. Never use the Dual Sensor Brake Support II (DSBS II) in place of normal braking operations. This system cannot help avoid or reduce the impact of a collision in every situation. Over-reliance on this system to drive the vehicle safely may lead to an accident resulting in death or serious injury.**
- **Although the Dual Sensor Brake Support II (DSBS II) is designed to help avoid or help reduce the impact of a collision, its effectiveness may change according to various conditions. Therefore, it may not always be able to achieve the same level of performance. Read the following items carefully. Do not overly rely on this system and always drive carefully.**
  - **Refer to "For safe use" (P.5-47) in this section.**

(Continued)

⚠ WARNING

(Continued)

When to disable the Dual Sensor Brake Support II (DSBS II)

- **Refer to "When it is necessary to disable the system" (P.5-47) in this section.**

Detectable objects

The system can detect the following as detectable objects. (Detectable objects differ depending on the function.)

- Vehicles
- Bicycles*1
- Pedestrians
- Motorcycles*1

*1: Detected as a detectable object only when being ridden.

System functions

• Frontal collision warning

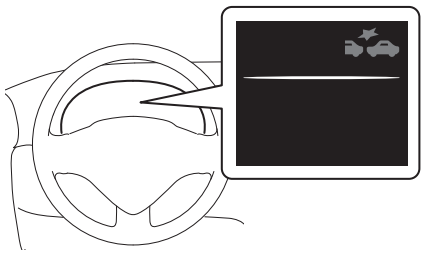

74U050059

"DUAL SENSOR BRAKE SUPPORT"

When the system determines that the possibility of a collision is high, a buzzer will sound and an image and warning message will be displayed on the information display to urge the driver to take evasive action.

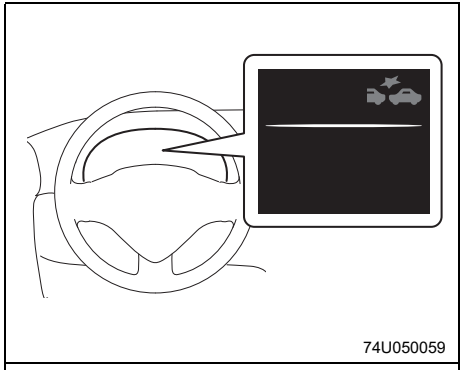

74U050059

"ACCELERATOR PEDAL IS PRESSED"

If the system determines that the accelerator pedal is strongly depressed, the above image and message will be displayed on the information display.

• Brake assist system

If the system determines that the possibility of a collision is high and the brake operation by the driver is insufficient, the braking power will be increased.

• Automatic brake system
If the system determines that the possibility of a collision is extremely high, the brakes are automatically applied to help avoid the collision or reduce the impact of the collision.

⚠ WARNING

Automatic brake system

- **When the automatic brake system function is operating, a large amount of braking force will be applied.**
- **The automatic brake system function is not designed to hold the vehicle stopped. If the vehicle is stopped by automatic brake system function, the driver should operate the brakes immediately as necessary.**
- **In the following situations, brake hold will not operate after the automatic brake system function has operated. Depending on the situation, the driver should operate the brake pedal immediately.**
  - **– When the accelerator pedal is depressed**
  - **– When the vehicle is stopped on a steep slope**

(Continued)

⚠ WARNING

(Continued)

- **The automatic brake system function may not operate if certain operations are performed by the driver. If the accelerator pedal is being depressed strongly or the steering wheel is being turned, the system may determine that the driver is taking evasive action and the automatic brake system function may not operate or may be deactivated.**
- **If the brake pedal is being depressed, the system may determine that the driver is taking evasive action and possibly delay the operation timing of the automatic brake system.**

NOTE:
Operating conditions of each function of the Dual Sensor Brake Support II (DSBS II)
The Dual Sensor Brake Support II (DSBS II) is enabled and the system determines that the possibility of a frontal collision with a detected object is high, the system will operate.
However, the system will not operate in the following situations:
- *When the vehicle has not been driven a certain amount after a terminal of the 12-volt battery has been disconnected and reconnected*
- *When the gearshift lever is in "R" position*
- *When the ESP® OFF indicator is illuminated (only the frontal collision warning function will be operational)*

The following are the operational speeds and cancelation conditions of each function:

- *Frontal collision warning*

Detectable objects	***Vehicle speed***	***Relative speed between your vehicle and object***
Preceding vehicles, stopped vehicles	*Approximately 5 to 180 km/h (3 to 112 mph)*	*Approximately 5 to 180 km/h (3 to 112 mph)*
Bicycles	*Approximately 5 to 80 km/h (3 to 50 mph)*	*Approximately 5 to 80 km/h (3 to 50 mph)*
Pedestrians	*Approximately 5 to 80 km/h (3 to 50 mph)*	*Approximately 5 to 80 km/h (3 to 50 mph)*
Preceding motorcycles, stopped motorcycles	*Approximately 5 to 80 km/h (3 to 50 mph)*	*Approximately 5 to 80 km/h (3 to 50 mph)*

While the frontal collision warning is operating, if the steering wheel is operated heavily or suddenly, the frontal collision warning may be canceled.

• *Brake assist system*

Detectable objects	***Vehicle speed***	***Relative speed between your vehicle and object***
Preceding vehicles, stopped vehicles	*Approximately 30 to 180 km/h (19 to 112 mph)*	*Approximately 10 to 180 km/h (6 to 112 mph)*
Bicycles	*Approximately 30 to 80 km/h (19 to 50 mph)*	*Approximately 30 to 80 km/h (19 to 50 mph)*
Pedestrians	*Approximately 30 to 80 km/h (19 to 50 mph)*	*Approximately 30 to 80 km/h (19 to 50 mph)*
Preceding motorcycles, stopped motorcycles	*Approximately 30 to 80 km/h (19 to 50 mph)*	*Approximately 10 to 80 km/h (6 to 50 mph)*

• *Automatic brake system*

Detectable objects	***Vehicle speed***	***Relative speed between your vehicle and object***
Preceding vehicles	*Approximately 5 to 180 km/h (3 to 112 mph)*	*Approximately 5 to 180 km/h (3 to 112 mph)*
Stopped vehicles	*Approximately 5 to 80 km/h (3 to 50 mph)*	*Approximately 5 to 80 km/h (3 to 50 mph)*
Bicycles	*Approximately 5 to 80 km/h (3 to 50 mph)*	*Approximately 5 to 80 km/h (3 to 50 mph)*
Pedestrians	*Approximately 5 to 80 km/h (3 to 50 mph)*	*Approximately 5 to 80 km/h (3 to 50 mph)*
Preceding motorcycles, stopped motorcycles	*Approximately 5 to 80 km/h (3 to 50 mph)*	*Approximately 5 to 80 km/h (3 to 50 mph)*

If either of the following occur while the automatic brake system function is operating, it will be canceled:
- *The accelerator pedal is strongly depressed*
- *The steering wheel is operated heavily or suddenly*

NOTE:
Detection of detectable objects

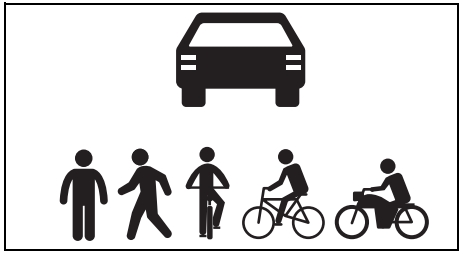

69TJ050080

Objects are detected based on their size, shape, and movement. Depending on the ambient brightness, movement, posture and direction of a detectable object, it may not be detected and the system may not operate properly. The system detects shapes, such as the following, as detectable objects.

Situations in which the system may operate even though the possibility of a collision is not high

- *In certain situations, such as the following, the system may determine that the possibility of a collision is high and operate:*
  - *When passing a detectable object*
  - *When changing lanes while overtaking a detectable object*
  - *When suddenly approaching a detectable object*
  - *When approaching a detectable object or other object on the roadside, such as guardrails, utility poles, trees, walls, etc.*

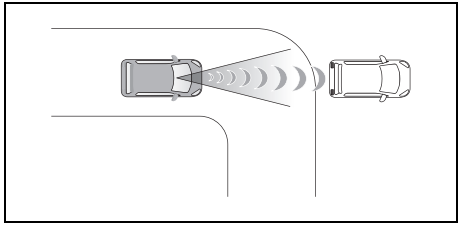

69TJ050090

  - *When there is a detectable object or other object by the roadside at the entrance of a curve*
  - *When there are patterns or a painting ahead of the vehicle that may be mistaken for a detectable object*

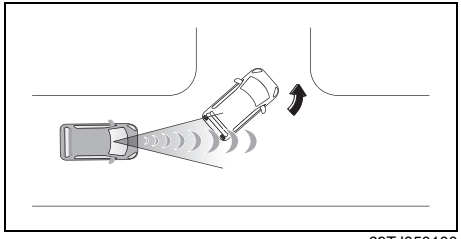

69TJ050100

  - *When passing a detectable object that is changing lanes or turning left/right*

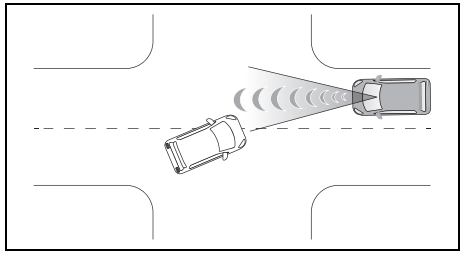

69T050110

  - *When passing a detectable object which is stopped to make a left/right turn*
  - *When a detectable object stops immediately before entering the path of the vehicle*

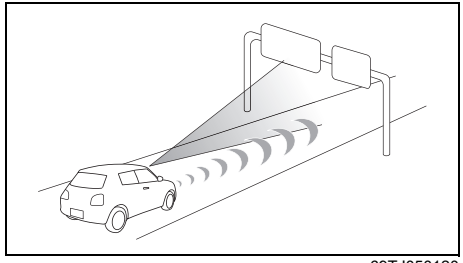

69TJ050120

  - *When passing through a location with a structure above the road (traffic sign, billboard, etc.)*
  - *When approaching an electric toll gate barrier, parking lot barrier, or other barrier that opens and closes*

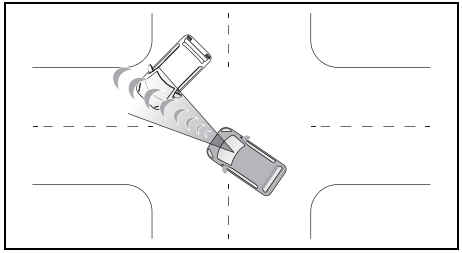

69T050130

– *When turning left/right and an oncoming vehicle turns left/right in front of the vehicle*
– *When the steering wheel is operated toward the path of an oncoming vehicle*

• *When there is something moving above or below the road.*

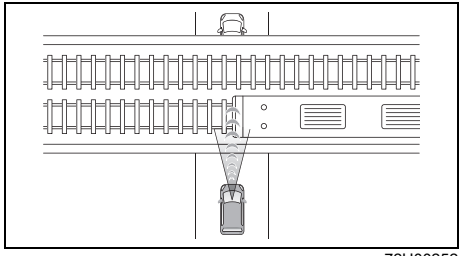

72U00252

<u>Situations in which the system may not operate properly</u>

• *In certain situations, such as the following, a detectable object may not be detected by the front sensors, and the system may not operate properly:*
– *When a detectable object is approaching your vehicle*
– *When your vehicle or a detectable object is wandering*
– *When a detectable object makes an abrupt maneuver (such as sudden swerving, acceleration or deceleration)*
– *When suddenly approaching a detectable object*
– *When the detectable object is near a wall, fence, guardrail, manhole cover, steel plate on the road surface, or another vehicle*
– *When there is a structure above a detectable object*
– *When part of a detectable object is hidden by another object (large luggage, umbrella, guardrail, etc.)*
– *When multiple detectable objects are overlapping*
– *When a bright light, such as the sun, is reflecting off of a detectable object*
– *When a detectable object is white and looks extremely bright*
– *When the color or brightness of a detectable object causes it to blend in with its surroundings*
– *When a detectable object cuts in front of or suddenly emerges in front of your vehicle*
– *When approaching a vehicle which is diagonal*
– *If a vehicle ahead is a child sized bicycle, is carrying a large load, is carrying an extra passenger, or has an unusual shape (bicycles equipped with a child seat, tandem bicycles, etc.)*
– *If a pedestrian or bicycle is shorter than approximately 1 m (3.3 ft.) or taller than approximately 2 m (6.6 ft.).*
– *When the silhouette of a pedestrian or bicycle is unclear (such as when they are wearing a raincoat, long skirt, etc.)*
– *When a pedestrian is bending forward or squatting*
– *When a pedestrian or bicycle is moving at high speed*
– *When a pedestrian is pushing a stroller, wheelchair, bicycle or other vehicle*
– *When a detectable object blends in with the surrounding area, such as when it is dim (at dawn or dusk) or dark (at night or in a tunnel)*
– *When the vehicle has not been driven for a certain amount of time after the engine was started*
– *While turning left/right or a few seconds after turning left/right*
– *While driving around a curve and a few seconds after driving around a curve*

Dual Sensor Brake Support II (DSBS II) OFF switch

You can turn off the Dual Sensor Brake Support II (DSBS II).

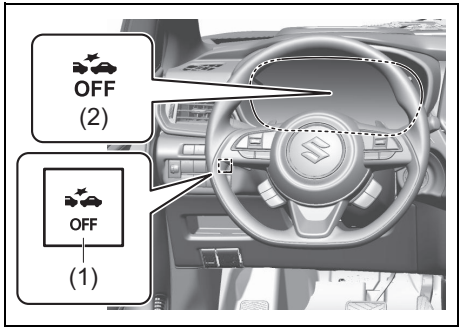

74U050060

- When you want to turn off the system, push and hold the Dual Sensor Brake Support II (DSBS II) OFF switch (1) until the interior buzzer beeps and the Dual Sensor Brake Support II (DSBS II) OFF indicator light (2) comes on.
- When you want to turn the system back on, push the Dual Sensor Brake Support II (DSBS II) OFF switch (1), the interior buzzer beeps and the Dual Sensor Brake Support II (DSBS II) OFF indicator light (2) goes off.
- Every time you turn off the engine, the system will turn back on and the Dual Sensor Brake Support II (DSBS II) OFF indicator light (2) will go off.
- Every time you push the Dual Sensor Brake Support II (DSBS II) OFF switch (1), the interior buzzer will beep to inform you of the system's activation or deactivation.

Changing the Dual Sensor Brake Support II (DSBS II) setting

The Dual Sensor Brake Support II (DSBS II) setting can be changed through the information display setting mode*1. For details, refer to "Setting Mode" (P.4-29). The system is enabled each time the engine switch is pressed to change the ignition mode to ON.

- When the adaptive cruise control is operating, the frontal collision warning will operate at the [Earlier] timing, regardless of the user setting.

*1: The items you can change depend on the vehicle's specifications.

Lane departure prevention system

Basic functions

The lane departure prevention system warns the driver if the vehicle may deviate from the current lane or course*1, and also can slightly operate the steering wheel to help avoid deviation from the lane or course*1.
The front camera (DSBS II) is used to detect lane lines or a course*1.

*1: Boundary between the asphalt and grass, soil, etc., or structures, such as a curb, guardrail, etc.

Lane departure warning

When the system determines that the vehicle might depart from its lane or course*1, the lane departure prevention indicator light will blink and a warning buzzer will sound or the steering wheel will vibrate to alert the driver.

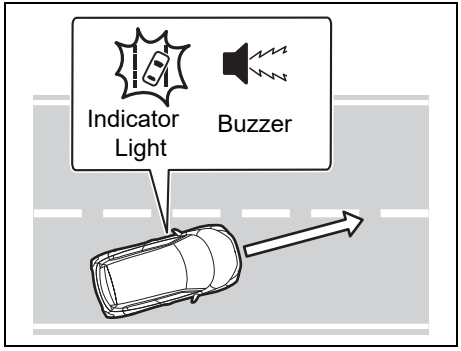

69T050640

Check the area around your vehicle and carefully operate the steering wheel to move the vehicle back to the center of the lane or course*1.

*1: Boundary between the asphalt and grass, soil, etc., or structures, such as a curb, guardrail, etc.

Lane departure prevention

If the system determines that the vehicle is likely to depart from its lane or course*1, it provides assistance through steering wheel operations to help avoid deviation from the lane or course.

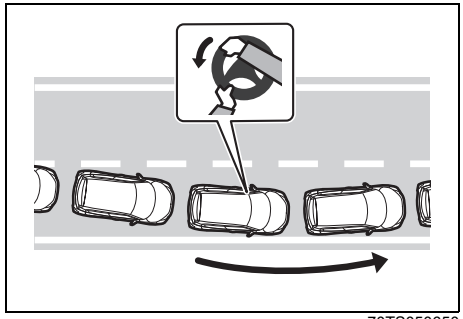

70TS050650

If the system determines that the steering wheel has not been operated for a certain amount of time or the steering wheel is not being firmly gripped, a warning message may be displayed and a warning buzzer may sound to alert the driver.

*1: Boundary between the asphalt and grass, soil, etc., or structures, such as a curb, guardrail, etc.

Vehicle swaying warning

If the vehicle is swaying, the lane departure prevention indicator light will blink and a warning buzzer will sound to urge the driver to take a break.

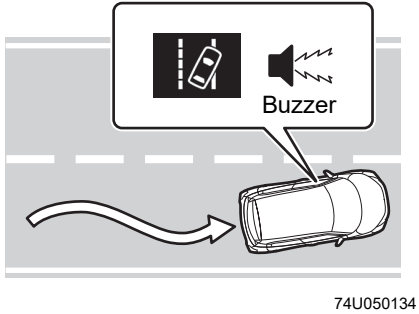

"VEHICLE SWAYING DETECTED"

⚠ WARNING

Before using the lane departure prevention system

- **Do not overly rely on the lane departure prevention system. The lane departure prevention system is a system which provides automated assistance in driving. However, as it is not a system which reduces the amount of attention necessary for safe driving. The driver is solely responsible for paying attention to their surroundings and operating the steering wheel as necessary to ensure safety. Also, the driver is responsible for taking adequate breaks when fatigued, such as when driving for a long time.**
- **Failure to perform appropriate driving operations and pay careful attention may lead to an accident.**

NOTE:

Operating conditions of each function

- *Lane departure warning/prevention function*
  This function is operable when all of the following conditions are met:
  - *The vehicle speed is approximately 50 km/h (31 mph) or more. Operation may be possible when the vehicle speed is approximately 40 km/h (25 mph) or more if vehicles, motorcycles, bicycles, or pedestrians are detected near the lane.*
  - *The system recognizes a lane or course*[*2]*. (When recognized on only one side*[*2]*, the system will operate only for the recognized side.)*
  - *The lane width is approximately 3 m (9.8 ft.) or more. If the lane width is narrow, the lane departure warning and the lane departure prevention function may not work against line.*
  - *The turn signal control lever is not being operated.*
  - *The vehicle is not being driven around a sharp curve.*
  - *The vehicle is not accelerating or decelerating more than a certain amount.*
  - *The steering wheel is not being turned sufficiently to perform a lane change.*

**2: Boundary between the asphalt and grass, soil, etc., or structures, such as a curb, guardrail, etc.*

- *Vehicle swaying warning*
  This function is operable when all of the following conditions are met:
  – *The vehicle speed is approximately 50 km/h (31 mph) or more.*
  – *The lane width is approximately 3 m (9.8 ft.) or more.*

Temporary cancellation of functions

When the operating conditions are no longer met, a function may be temporarily canceled. However, when the operation conditions are met again, operation of the function will automatically be restored.

Operation of the lane departure warning function/lane departure prevention function

- *Depending on the vehicle speed, road conditions, lane departure angle, etc., operation of the lane departure prevention function may not be felt or the function may not operate.*
- *Depending on the conditions, the warning buzzer may operate even if vibration is selected through a customize setting.*
- *If a course*[*2] *is not clear or straight, the lane departure alert function or lane departure prevention function may not operate.*
- *The lane departure warning function or lane departure prevention function may not operate if the system judges that the vehicle is intentionally being steered to avoid a pedestrian or parked vehicle.*
- *The steering assist operation of the lane departure prevention function can be overridden by the steering wheel operation of the driver.*

**2: Boundary between the asphalt and grass, soil, etc., or structures, such as a curb, guardrail, etc.*

Hands off steering wheel warning



69T050810

"KEEP CONTROL OF STEERING WHEEL"

In the following situations, a message urging the driver to operate the steering wheel and an image will be displayed and a buzzer will sound to warn the driver. When using the system, make sure to grip the steering wheel firmly, regardless of whether the warning is operating or not.

- *When the system determines that the driver is not securely holding the steering wheel, or the steering wheel is not being operated when the steering assist operation of the lane departure prevention function is operating. The length of time that the warning buzzer operates will become longer as the frequency of the steering assist operating increases. Even if the system judges that the steering wheel has been operated, the warning buzzer will sound for a certain amount of time.*

Vehicle swaying warning



69T040280

"VEHICLE SWAYING DETECTED"

If the vehicle is swaying, a message will be displayed and a warning buzzer will sound to urge the driver to take a break.

Depending on the condition of the vehicle and road surface, the vehicle swaying warning function may not operate.

Lane departure prevention OFF switch

You can turn off the lane departure prevention, lane departure warning and the vehicle swaying warning.

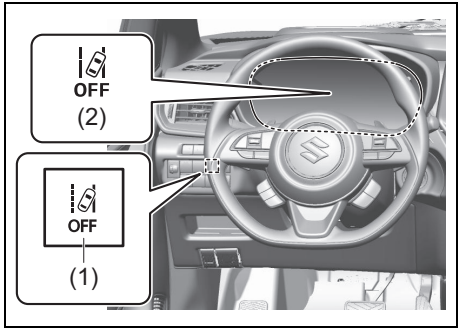

74U050061

- When you want to turn off the system, push and hold the lane departure prevention OFF switch (1) until the interior buzzer beeps and the lane departure prevention OFF indicator light (2) comes on.

Perform the following method to turn the system back on.

- Push the lane departure prevention OFF switch (1), the interior buzzer beeps and the lane departure prevention OFF indicator light (2) goes off.

⚠ WARNING

If you attempt to press the lane departure prevention OFF switch while driving, you could lose control of the vehicle.
Do not press the lane departure prevention OFF switch while driving.

Changing Lane Departure Prevention setting

The settings of the lane departure prevention can be changed through the information display setting mode. For details, refer to “Setting Mode” (P.4-29).

⚠ WARNING

Situations in which the lane departure prevention should not be used

Refer to “When it is necessary to disable the system” (P.5-47) in this section and disable the system. Failure to do so may lead to an accident.

Situations in which the system may not operate properly

In the following situations, the system may not operate properly and the vehicle may depart from its lane. Do not overly rely on these functions. The driver is solely responsible for paying attention to their surroundings and operating the steering wheel as necessary to ensure safety.

- **When the boundary between the asphalt and grass, soil, etc., or structures, such as a curb, guardrail, etc. is not clear or straight**

(Continued)

⚠ WARNING

(Continued)

- **When the vehicle is struck by a crosswind or the turbulence of other nearby vehicles**
- **Situations in which the lane may not be detected: Refer to “Situations in which the lane may not be detected” (P.5-53) in this section.**
- **Situations in which the sensors may not operate properly: Refer to “Situations in which the front camera (DSBS II) and front radar (DSBS II) may not operate properly” (P.5-52) in this section.**
- **Situations in which some or all of the functions of the system cannot operate: Refer to “Situations in which some or all of the functions of the system cannot operate” (P.5-53) in this section.**

Displays and system operation

The operating state of the lane departure warning function and steering assist operation of the lane departure prevention function are indicated.

Indicator	Information display		Situation
	Lane	Steering	
 On (yellow)	Off	Off	System disabled
 On (white)	 On (white outline)	Off	Lane lines are not detected by the system
 On (white)	 On (white)	Off	Lane lines are detected by the system
 Blinks (yellow)	 Blinks (yellow)	Off	Lane departure warning function is operating for the side which the lane display is blinking

Indicator	Information display		Situation
	Lane	Steering	
 On (green)	 On (green)	 On (green)	Lane departure prevention function is operating for the side which the lane display is illuminated
 Blinks (yellow)	 Blinks (yellow)	 On (green)	Lane departure warning function/lane departure prevention function is operating for the side which the lane display is blinking
 On (yellow)	Off	Off	When the engine switch is pressed to change the ignition mode to ON, this light comes on briefly so you can check that the light is working. If there is a problem in the lane departure prevention with the engine switch in ON mode, this light will come on by yellow. Bring the vehicle to an authorized SUZUKI dealer or a qualified workshop to have the problem corrected.

Lane keep assist

When driving on a road with clear lane lines with the adaptive cruise control operating, lane lines and preceding vehicles are detected using the front camera (DSBS II) and radar sensor, and the steering wheel is operated to maintain the vehicle's lane position.

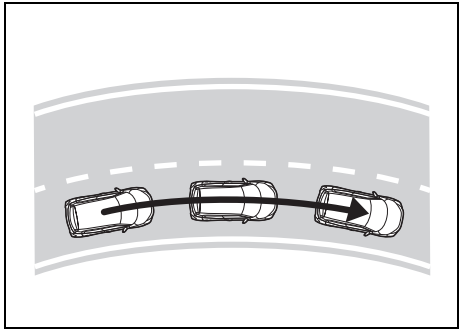

69T050680

Use the function only on highways and expressways.
If the adaptive cruise control is not operating, the function will not operate.
Refer to “Adaptive cruise control” (P.5-80).
In situations where the lane lines are difficult to see or are not visible, such as when in a traffic jam, support will be provided using the path of preceding vehicles.
If the system determines that the steering wheel has not been operated for a certain amount of time or the steering wheel is not being firmly gripped, the driver will be alerted via a display and this function will be temporarily canceled.
If the function is deactivated, use the lane keep assist ON/OFF switch to turn on the system.

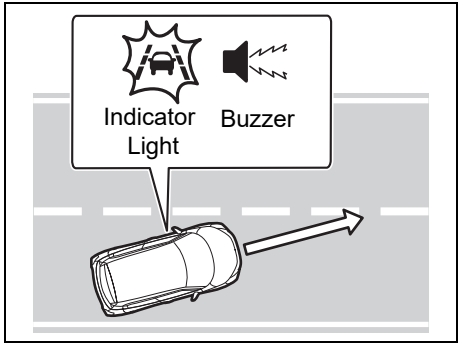

69T050950

- When the function is operating, if the vehicle is likely to depart from its lane, the driver will be alerted via a display and buzzer.
- When the buzzer sounds, check the area around the vehicle and carefully operate the steering wheel to move the vehicle back to the center of the lane.

⚠ WARNING

Before using the lane keep assist system

- **Do not overly rely on the lane keep assist system. The lane keep assist system is a system which provides automated assistance in driving. However, as it is not a system which reduces the amount of attention necessary for safe driving. The driver is solely responsible for paying attention to their surroundings and operating the steering wheel as necessary to ensure safety. Also, the driver is responsible for taking adequate breaks when fatigued, such as when driving for a long time.**
- **Failure to perform appropriate driving operations and pay careful attention may lead to an accident.**
- **When not using the lane keep assist system, turn it off using the lane keep assist ON/OFF switch.**

NOTE:

Operating conditions of function

- *This function is operable when all of the following conditions are met:*
  - *The lane keep assist system detects lane lines or the path of preceding vehicles (except when the preceding vehicle is small, such as a motorcycle).*
  - *The adaptive cruise control is operating.*
  - *The lane width is approximately 3 to 4 m (10 to 13 ft.).*
  - *The turn signal control lever is not being operated.*
  - *The vehicle is not being driven around a sharp curve.*
  - *The vehicle is not accelerating or decelerating more than a certain amount.*
  - *The steering wheel is not being turned with a large force.*
  - *The hands off steering wheel warning is not operating. Refer to "Hands off steering wheel warning" in this NOTE.*
  - *The vehicle is being driven in the center of a lane.*

Temporary cancelation of functions

- *When the operating conditions are no longer met, a function may be temporarily canceled. However, when the operation conditions are met again, operation of the function will automatically be restored. Refer to "Operating conditions of function" in this NOTE.*
- *If the operating conditions of a function are no longer met while the function is operating, a buzzer may sound to indicate that the function has been temporarily canceled.*
- *The steering assist operation of the function can be overridden by the steering wheel operation of the driver.*

Lane departure warning function when the lane keep assist is operating

- *Even if the warning method of the lane departure warning is changed to vibration of the steering wheel, if the vehicle deviates from the lane while the lane keep assist is operating, the warning buzzer will sound to alert the driver.*
- *If steering wheel operation equivalent to that necessary for a lane change is detected, the system will determine the vehicle is not deviating from the lane and the warning will not operate.*

Hands off steering wheel warning

EXAMPLE



69TJ040700

"KEEP CONTROL OF STEERING WHEEL"

In the following situations, a message urging the driver to grip the steering wheel and the image shown in the illustration will be displayed on the information display to warn the driver. If the system detects that the steering wheel is held, the warning will be canceled. When using the system, make sure to grip the steering wheel firmly, regardless of whether the warning is operating or not.

Refer to "Warning and Indicator Messages" (P.4-33).

- *When the system determines the driver is not holding the steering wheel while the function is operating*
  - *– If no operations are detected for a certain amount of time, a buzzer will sound, the warning will operate, and the function will be canceled. This warning may also operate if the driver only operates steering wheel a small amount continuously.*
- *Depending on the condition of the vehicle, handle control condition and road surface, the warning function may not operate.*

Lane keep assist ON/OFF switch

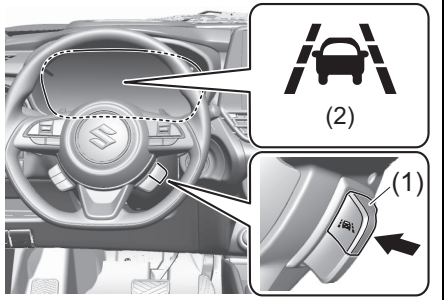

74U050062

(1) Lane keep assist ON/OFF switch
(2) Lane keep assist indicator light

- To turn on the lane keep assist, push the lane keep assist ON/OFF switch (1) in the arrow direction as shown in the illustration, and turn on the lane keep assist indicator light (2).
- To turn off the lane keep assist, push the lane keep assist ON/OFF switch (1) in the arrow direction again and turn off the lane keep assist indicator light (2).

⚠ WARNING

Situations in which the functions may not operate properly

In the following situations, the functions may not operate properly and the vehicle may depart from its lane. Do not overly rely on these functions. The driver is solely responsible for paying attention to their surroundings and operating the steering wheel as necessary to ensure safety.

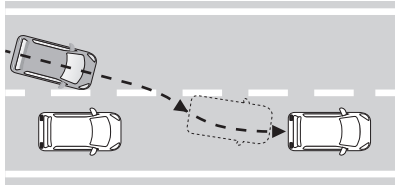

69TJ050190

- **When a preceding vehicle changes lanes (Your vehicle may follow the preceding vehicle and also change lanes)**

(Continued)

⚠ WARNING

(Continued)

- **When a preceding vehicle is swaying (Your vehicle may sway accordingly and depart from the lane)**
- **When a preceding vehicle departs from a lane (Your vehicle may follow the preceding vehicle and also depart from the lane)**
- **When a preceding vehicle is being driven extremely close to the left/right lane line (Your vehicle may follow the preceding vehicle accordingly and depart from the lane)**
- **When there are moving objects or structures in the surrounding area (Depending on the position of the moving object or structure relative to your vehicle, your vehicle may sway)**
- **When the vehicle is struck by a crosswind or the turbulence of other nearby vehicles**
- **Situations in which the sensors may not operate properly: Refer to "Situations in which the front camera (DSBS II) and front radar (DSBS II) may not operate properly" (P.5-52) in this section.**

(Continued)

⚠ WARNING

(Continued)

- **Situations in which the lane may not be detected: Refer to "Situations in which the lane may not be detected" (P.5-53) in this section.**
- **When it is necessary to disable the system: Refer to "When it is necessary to disable the system" (P.5-47) in this section.**

Operation display of steering wheel operation support

The operating state of the lane keep assist system is indicated.

Indicator	Information display		Situation
	Lane	Steering	
 On (white)	 On (white outline)	 On (white)	Lane keep assist is on standby
 On (green)	 On (green)	 On (green)	Lane keep assist is operating
 Blinks (yellow)	 Blinks (yellow)	 On (green)	The vehicle is departing the lane toward the side which the lane display is blinking
 On (yellow)	Off	Off	When the engine switch is pressed to change the ignition mode to ON, this light comes on briefly so you can check that the light is working. If there is a problem in the lane keep assist with the engine switch in ON mode, this light will come on by yellow. Bring the vehicle to an authorized SUZUKI dealer or a qualified workshop to have the problem corrected.

High beam assist

The high beam assist uses a front camera (DSBS II) located on the upper portion of the windshield to detect the brightness of the lights of vehicles ahead, streetlights, etc., and automatically changes the head lights between the high beams and low beams.

⚠ WARNING

For safe use

Do not overly rely on the high beam assist. Drivers should always be aware of their surroundings at their own responsibility, drive safely, and manually switch between high beam and low beam as needed.

To prevent unintentional operation of the high beam assist System

When it is necessary to disable the system: Refer to "When it is necessary to disable the system" (P.5-47) in this section.

Using the high beam assist system

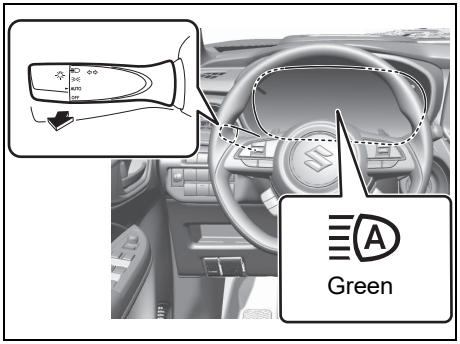

74U050063

- Set the lighting switch is set to the "AUTO" position while the ignition mode is ON, the high beam assist indicator light (green) will illuminate when the headlights come on automatically.
- To disable the high beam assist, pull the lever toward you or change the lever position or the lighting switch to other than the above. The high beam assist indicator light (green) will go off.

NOTE:

Automatic operating conditions of the high beams

- *When all of the following conditions are met, the high beams will illuminate automatically:*
  - *The vehicle speed is more than about 30 km/h (19 mph)*
  - *The area ahead of the vehicle is dark.*
  - *There are no vehicles ahead with lights on.*
  - *There are few streetlights or other lights on the road ahead.*
- *If any of the following conditions are met, the headlights will change to the low beams:*
  - *The vehicle speed drops below about 25 km/h (16 mph)*
  - *The area ahead of the vehicle is not dark.*
  - *There is a vehicle ahead with lights on.*
  - *There are many streetlights or other lights on the road ahead.*

Front Camera (DSBS II) detection

- *In the following situations, the high beams may not be automatically changed to the low beams:*
  - *When a vehicle cuts in front of your vehicle*

  – *When another vehicle crosses in front of the vehicle*
  – *When vehicles ahead are repeatedly detected and then hidden due to repeated curves, road dividers or roadside trees*
  – *When a vehicle ahead approaches from a far lane*
  – *When a vehicle ahead is far away*
  – *When a vehicle ahead has no lights*
  – *When the lights of a vehicle ahead are dim*
  – *When a vehicle ahead is reflecting strong light, such as own headlights*
  – *Situations in which the sensors may not operate properly: Refer to "Situations in which the front camera (DSBS II) and front radar (DSBS II) may not operate properly" (P.5-52) in this section.*
- *The headlights may change to the low beams if a vehicle ahead that is using fog lights without its headlights turned on is detected.*
- *House lights, street lights, traffic signals, and illuminated billboards or signs may cause the high beams to change to the low beams, or the low beams to remain on.*
- *The following may change the timing at which the headlights change to the low beams:*
  – *The brightness of lights of vehicles ahead*
  – *The movement and direction of vehicles ahead*
  – *The distance between the vehicle and a vehicle ahead*
  – *When a vehicle ahead only has lights illuminated on one side*
  – *When a vehicle ahead is a two-wheeled vehicle*
  – *The condition of the road (gradient, curve, condition of the road surface, etc.)*
  – *The number of passengers and amount of luggage*
- *The headlights may change between the high beams and low beams unexpectedly.*
- *Bicycles and other small vehicles may not be detected.*
- *In the following situations, the system may not be able to correctly detect the brightness of the surroundings. This may cause the low beams to remain on or the high beams to flash or dazzle pedestrians or vehicles ahead. In such a case, it is necessary to manually change between the high beams and low beams.*
  – *When there are lights similar to headlights or tail lights in the surrounding area*
  – *When headlights or tail lights of vehicles ahead are turned off, dirty, changing color, or not aimed properly*
  – *When the headlights are repeatedly changing between the high beams and low beams.*
  – *When use of the high beams is inappropriate or when the high beams may be flashing or dazzling pedestrians or other drivers.*
  – *When the vehicle is used in an area in which vehicles travel on the opposite side of the road of the country for which the vehicle was designed, for example using a vehicle designed for right-hand traffic in a left-hand traffic area, or vice versa*
  – *When it is necessary to disable the system: Refer to "When it is necessary to disable the system" (P.5-47) in this section.*
  – *Situations in which the sensors may not operate properly: Refer to "Situations in which the front camera (DSBS II) and front radar (DSBS II) may not operate properly" (P.5-52) in this section.*

Changing high beam assist setting

The settings of the high beam assist can be changed through the information display setting mode. For details, refer to "Setting Mode" (P.4-29).

Turning the high beams on/off manually

• Changing to the high beams

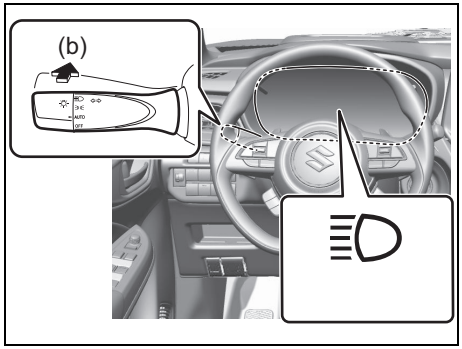

74U050064

- Push the lever forward the vehicle as shown in the illustration (b) to change to the high beams.
- To return to high beam assist, return the lever to its original position again.

• Changing to the low beams

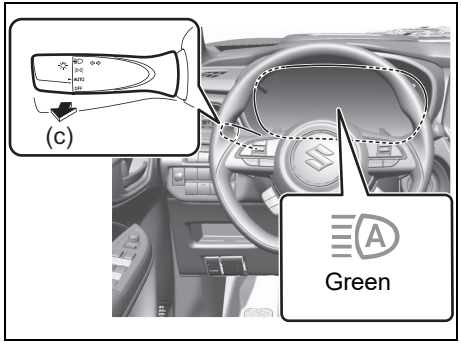

74U050065

- Set the lighting switch to other than “AUTO” position or pull the lighting control lever toward you as shown in the illustration (c), the high beam assist indicator light (green) will turn off.
- To return to high beam assist, pull the lever toward you again or set the lighting switch to the “AUTO” position.

Adaptive cruise control

This adaptive cruise control uses front radar (DSBS II) and front camera (DSBS II) to detect the presence of vehicles ahead, determines the current vehicle-to-vehicle distance, and operates to maintain a suitable distance from the vehicle ahead. The desired vehicle-to-vehicle distance can be set by operating the following distance setting switch

Use the adaptive cruise control only on highways and expressways.

⚠ WARNING

For safe use

- **Driving safely is solely the responsibility of the driver. Do not overly rely on this system, and pay careful attention to the surrounding conditions in order to ensure safe driving.**

(Continued)

⚠ WARNING

(Continued)

- **The adaptive cruise control provides driving assistance to reduce the driver's burden. However, there are limitations to the assistance provided.**
  Read the following items carefully. Do not overly rely on this system and always drive carefully.
  – Conditions under which the system may not operate correctly: Refer to "Conditions under which the system may not operate correctly" (P.5-88) in this section.
- **Set the speed appropriately according to the speed limit, traffic flow, road conditions, weather conditions, etc. The driver is responsible for confirming the set speed.**
- **Even if the system is operating correctly, the condition of a preceding vehicle as recognized by the driver and detected by the system may differ. Therefore, it is necessary for the driver to pay attention, assess risks, and ensure safety. Over-reliance on this system to drive the vehicle safely may lead to an accident resulting in death or serious injury.**

(Continued)

⚠ WARNING

(Continued)

<u>Precautions for the driving assist systems</u>

Observe the following precautions, as there are limitations to the assistance provided by the system. Over-reliance on this system may lead to an accident resulting in death or serious injury.

- **For support for the driver's vision: The adaptive cruise control is only intended to help the driver in determining the distance between the driver's own vehicle and a designated preceding vehicle. It is not a system which allows for careless or inattentive driving, and is not a system which assists in poor visibility conditions. The driver must pay attention to their surroundings.**

(Continued)

⚠ WARNING

(Continued)

- **For support for the driver's judgment:**
  The adaptive cruise control determines whether the distance between the driver's own vehicle and a designated preceding vehicle is within a set range. It is not capable of making any other type of judgment. Therefore, it is absolutely necessary for the driver to remain vigilant and to determine whether or not there is a possibility of danger.
- **For support for the driver's operation:**
  The adaptive cruise control does not include functions which will prevent or avoid collisions with vehicles ahead of your vehicle. Therefore, if there is ever any possibility of danger, the driver must take immediate and direct control of the vehicle and act appropriately in order to ensure safety.

(Continued)

⚠ WARNING

(Continued)

Situations in which the adaptive cruise control should not be used

Do not use the adaptive cruise control in the following situations. As the system will not be able to provide appropriate control, using it may lead to an accident resulting in death or serious injury.

- **When driving on a road with a mix of pedestrians, bicycles, etc.**
- **When driving on a highway or expressway entrance or exit**
- **When the approach warning sounds frequently**
- **When vehicle is driven on steep hill**

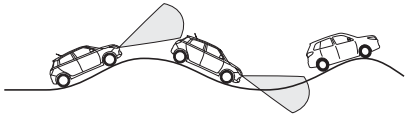

69T050980

- **When vehicle is driven on the road with many steep uphills and downhills**

(Continued)

⚠ WARNING

(Continued)

- **Situations in which the sensors may not operate properly:**
  - **Situations in which the lane may not be detected: Refer to "Situations in which the front camera (DSBS II) and front radar (DSBS II) may not operate properly" (P.5-52) in this section.**
  - **When it is necessary to disable the system: Refer to "When it is necessary to disable the system" (P.5-47) in this section.**
- **A busy road or one that involves frequent acceleration and deceleration. The system could not keep your vehicle at an appropriate speed for traffic conditions.**
- **On a slippery road such as ice or snow-covered road. The tyres may turn over and you may lose control of the vehicle.**
- **When your vehicle is towed or your vehicle is towing another vehicle**
- **When the vehicle cannot move in a straight manner without consistently steering, due to an accident or breakdown**

NOTE:
When the adaptive cruise control is operating, there may be a noise caused by the brake application, which is not abnormal.

Basic functions

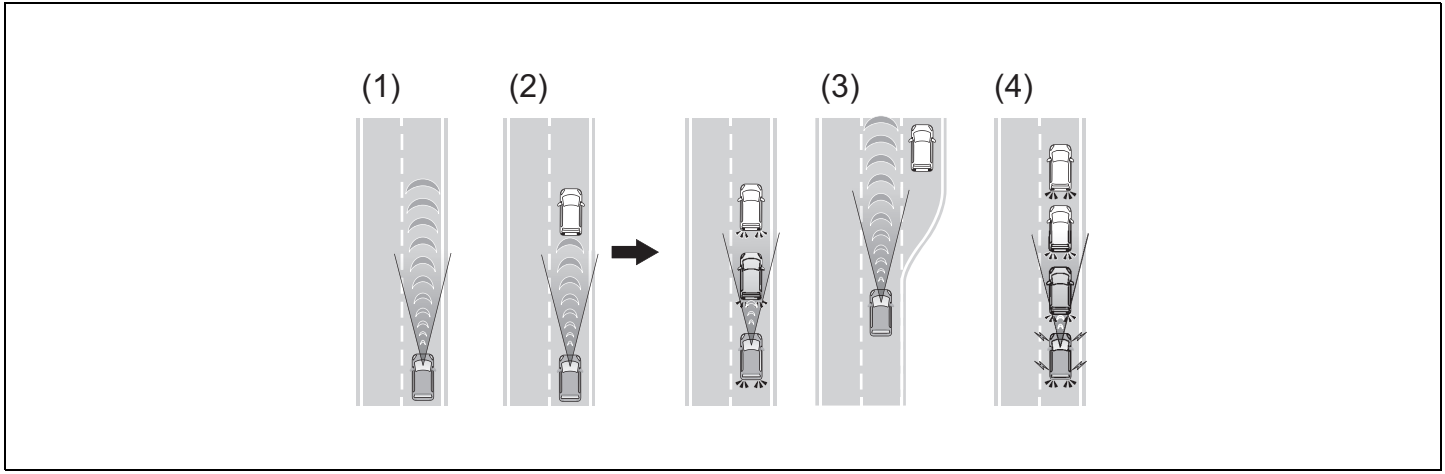

69T050490

(1) Constant speed cruising:
When there are no vehicles ahead
The vehicle drives at the speed set by the driver.
If the set vehicle speed is exceeded while driving down a hill, a message such as the following will appear.

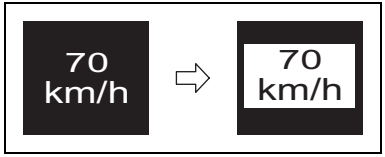

69T050960

(2) Deceleration and follow-up cruising
When a preceding vehicle driving slower than the set vehicle speed is detected
When a vehicle is detected driving ahead of your vehicle, the vehicle automatically decelerates and if a greater reduction in vehicle speed is necessary, the brakes are applied (the stop lights will come on at this time). The vehicle is controlled to maintain the vehicle-to-vehicle distance set by the driver, in accordance with changes in the speed of the preceding vehicle. If vehicle deceleration is not sufficient and the vehicle approaches the vehicle ahead, the approach warning will sound.
(3) Acceleration
When there are no longer any preceding vehicles driving slower than the set vehicle speed
The vehicle accelerates until the set vehicle speed is reached and then resumes constant speed cruising.
(4) Stop the vehicle following a preceding vehicle:
If a preceding vehicle stops, the vehicle will also stop. However, it does not have a function to maintain a stopped state, so apply the brakes immediately after stopping the vehicle.

System components

• Meter display

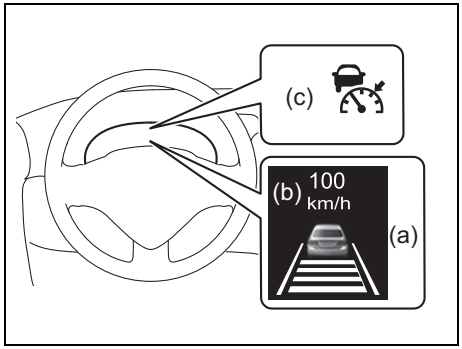

74U050066

(a) Information display
(b) Set vehicle speed
(c) Adaptive cruise control indicator

• Switches

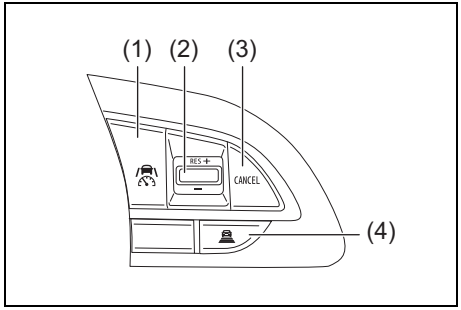

69TJ050910

(1) Driving assist switch
(2) “RES +” / “–” switch
(3) “CANCEL” switch
(4) Following distance setting switch

Using the adaptive cruise control

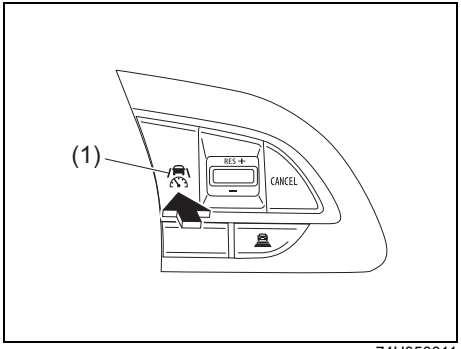

74U050011

1) Using the accelerator pedal, accelerate or decelerate to the desired vehicle speed (approximately 30 km/h (19 mph) or more), and press the driving assist switch (1) to set the set vehicle speed.

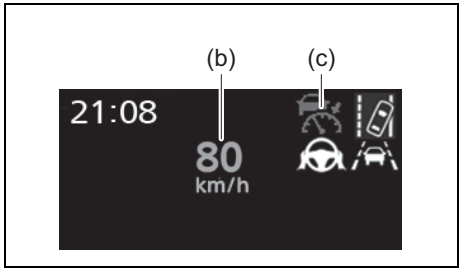

69T050590

The adaptive cruise control indicator (c) will change from illuminated in white to green. The set vehicle speed (b) will be displayed on the information display (a) in green. If the vehicle speed is set while driving at below approximately 30 km/h (19 mph), the set vehicle speed will be set to approximately 30 km/h (19 mph).

Adjusting the set vehicle speed

• Adjusting the set vehicle speed using the switches

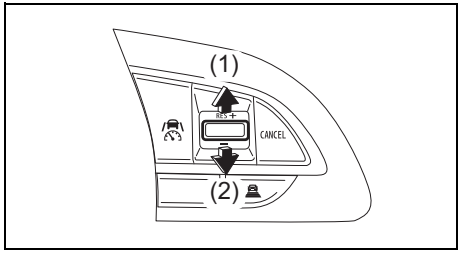

69TJ050930

(1) Increase set vehicle speed
(2) Decrease set vehicle speed

Short press adjustment:
Press the switch
Long press adjustment:
Press and hold the switch until the desired set vehicle speed is reached.

The set vehicle speed will increase or decrease as follows:

- Short press adjustment: By 1 km/h (0.6 mph) or 1 mph (1.6 km/h) each time the switch is pressed.
- Long press adjustment: Increases or decreases in 5 km/h (3.1 mph) or 5 mph (8 km/h) increments continuously while the switch is pressed and held.

The set vehicle speed adjustment increment can be changed through a customize setting. Refer to “Setting Mode” (P.4-29).

• Increasing the set vehicle speed using the accelerator pedal

1) To increase the set speed, accelerate to the desired speed using the accelerator pedal.
2) Pull up the “RES +” / “–” switch to “RES +” position. The new speed will be maintained.

Canceling/resuming control

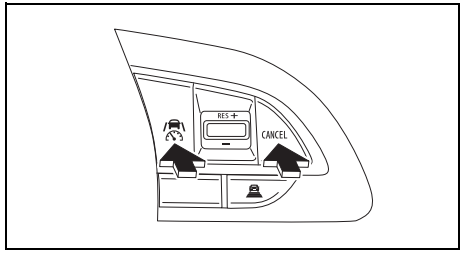

69TJ050940

1) Press “CANCEL” switch or driving assist switch to cancel control. Control will also be canceled if the brake pedal is depressed.
2) Pull up the “RES +” / “–” switch to “RES +” position or press driving assist switch to resume control.

Changing the vehicle-to-vehicle distance

- Each time the switch is pressed, the vehicle-to-vehicle distance setting will change as follows:
  If a preceding vehicle is detected, the preceding vehicle mark (A) will be displayed.

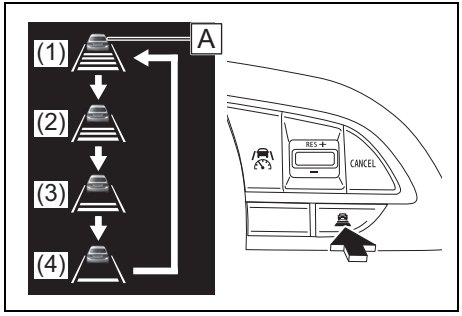

69TJ050950

Vehicle-to-vehicle distance		Approximate Distance (Vehicle Speed: 100 km/h [62 mph])
(1)	Long	Approximately 70 m (230 ft)
(2)	Medium	Approximately 60 m (197 ft)
(3)	Short	Approximately 45 m (148 ft)
(4)	Shortest	Approximately 30 m (98 ft)

NOTE:

Operating conditions

- *The gearshift lever is in "D".*
- *The desired set speed can be set when the vehicle speed is approximately 30 km/h (19 mph) or more. (If the vehicle speed is set while driving at below approximately 30 km/h [19 mph], the set speed will be set to approximately 30 km/h [19 mph].)*

Accelerating after setting the vehicle speed

As with normal driving, acceleration can be performed by depressing the accelerator pedal. After accelerating, the vehicle will return to the set vehicle speed. However, while in vehicle-to-vehicle distance control mode, the vehicle speed may decrease to below the set vehicle speed in order to maintain the distance from the preceding vehicle.

Automatic cancellation of adaptive cruise control

In the following situations, the adaptive cruise control will be canceled automatically:

- *When the vehicle is stopped*
- *When the brake control or output restriction control of SUZUKI SAFETY SUPPORT operates (For example: Dual Sensor Brake Support II (DSBS II))*
- *When the parking brake has been operated*

- *Situations in which some or all of the functions of the system cannot operate: Refer to "Situations in which some or all of the functions of the system cannot operate" (P.5-53) in this section.*

Adaptive cruise control warning messages and buzzers

– *For safe use: Refer to "For safe use" (P.5-47) in this section.*

Preceding vehicles that the sensor may not detect correctly

In the following situations, depending on the conditions, if the system cannot provide sufficient deceleration or acceleration is necessary, operate the brake pedal or accelerator pedal.
As the sensor may not be able to correctly detect these types of vehicles, the approach warning may not operate.
Refer to "Approach warning" (P.5-88) in this section.

- *When a vehicle cuts in front of your vehicle or changes lanes away from your vehicle extremely slowly or quickly*
- *When changing lanes*
- *When a preceding vehicle is driving at a low speed*
- *When a vehicle is stopped in the same lane as the vehicle*
- *When a motorcycle is traveling in the same lane as the vehicle*

Conditions under which the system may not operate correctly

In the following situations, operate the brake pedal (or accelerator pedal, depending on the situation) as necessary.
As the sensor may not be able to correctly detect a vehicle, the system may not operate properly.

- *When a preceding vehicle brakes suddenly*
- *When changing lanes at low speeds, such as in a traffic jam*

Approach warning

In situations where the vehicle approaches a preceding vehicle and the system cannot provide sufficient deceleration, such as if a vehicle cuts in front of the vehicle, a warning display will flash and a buzzer will sound to alert the driver. Depress the brake pedal to ensure appropriate vehicle-to-vehicle distance.

• Warnings may not occur when

In the following situations, the warning may not operate even though the vehicle- to-vehicle distance is short.

- When the preceding vehicle is traveling at the same speed or faster than your vehicle
- When the preceding vehicle is traveling at an extremely low speed
- Immediately after the vehicle speed has been set
- When the accelerator pedal is depressed

Curve speed reduction function

When a curve is detected, the vehicle speed will begin being reduced. When the curve ends, the vehicle speed reduction will end.
Depending on the situation, the vehicle speed will then return to the set vehicle speed.
In situations where vehicle-to-vehicle distance control needs to operate, such as when a preceding vehicle cuts in front of your vehicle, the curve speed reduction function will be canceled.

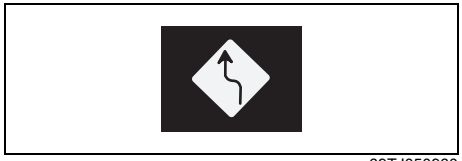

69TJ050960

NOTE:
Situations in which the curve speed reduction function may not operate

In situations such as the following, the curve speed reduction function may not operate:
- *When the vehicle is being driven around a gentle curve*
- *When the accelerator pedal is being depressed*
- *When the vehicle is being driven around an extremely short curve*

Changing the settings of the curve speed reduction function

Various settings of the curve speed reduction function can be changed through customize settings. Refer to "Setting Mode" (P.4-29).

Support for lane change

If your vehicle is being driven at approximately 80 km/h (50 mph) or more and a lane change to the passing lane is performed, when the turn signal control lever is operated for lane changing, the vehicle will accelerate up to the set speed to assist in overtaking.
If your vehicle is being driven at approximately 80 km/h (50 mph) or more and the lane is changed to that with a vehicle traveling slower than your vehicle, when the turn signal control lever is operated the vehicle will gradually decelerate to assist in changing lanes.

Changing adaptive cruise control settings

The settings of the adaptive cruise control can be changed through customize settings. Refer to "Setting Mode" (P.4-29).

Warning and indicator messages

The information display shows the warning and indicator messages to let you know about certain problems of the adaptive cruise control.

When adaptive cruise control cannot be set

Indicator	Message	Master warning indicator light	Sound	Cause and remedy
 69T050860	"ACC SYSTEM UNAVAILABLE TURN ON ESP SYSTEM"	Off	Beeps at short intervals (from interior buzzer)	Adaptive cruise control cannot be set because ESP® is OFF. Set ESP® to ON.
 69T050860	"ACC SYSTEM UNAVAILABLE SHIFT INTO D"	Off	Beeps at short intervals (from interior buzzer)	Adaptive cruise control cannot be set because the gearshift lever is not in "D" position. Shift the gear-shift lever in "D" and try again.
 69T050860	ACC SYSTEM UNAVAILABLE	Off	Beeps at short intervals (from interior buzzer)	Adaptive cruise control cannot be set except for the above causes. Ensure operating conditions and try again.

When adaptive cruise control is automatically cancelled

Indicator	Message	Master warning indicator light	Sound	Cause and remedy
No display	“DEPRESS BRAKE PEDAL”	Off	Continuous beep (from interior buzzer)	Adaptive cruise control was cancelled because the system was unable to continuously stop the vehicle.
		Off	Continuous beep (from interior buzzer)	Adaptive cruise control is canceled except for the above cause. Improve the cause, set adaptive cruise control again.

Blind Spot Monitor (BSM) (if equipped)

Blind Spot Monitor (BSM) detects presence of a vehicle diagonally in the rear and tells you of the presence by the outside rearview mirror and an interior buzzer. This system assists the driver to change lanes.

⚠ WARNING

- **The BSM is a supplemental device to tell you the presence of a vehicle approaching diagonally from the rear. However, your responsibility for safe driving is the most important matter. Check around the vehicle using your direct vision or mirrors.**
- **Depending on the circumstances, the system may not work. Do not rely excessively on the system and always drive in a safe manner. Overreliance on this function may lead to an accident.**

The sensor detects a vehicle running on the neighboring lane or approaching from the rear on the neighboring lane and tells the presence to you. The indicator on the outside rearview mirror at the detected side comes on.

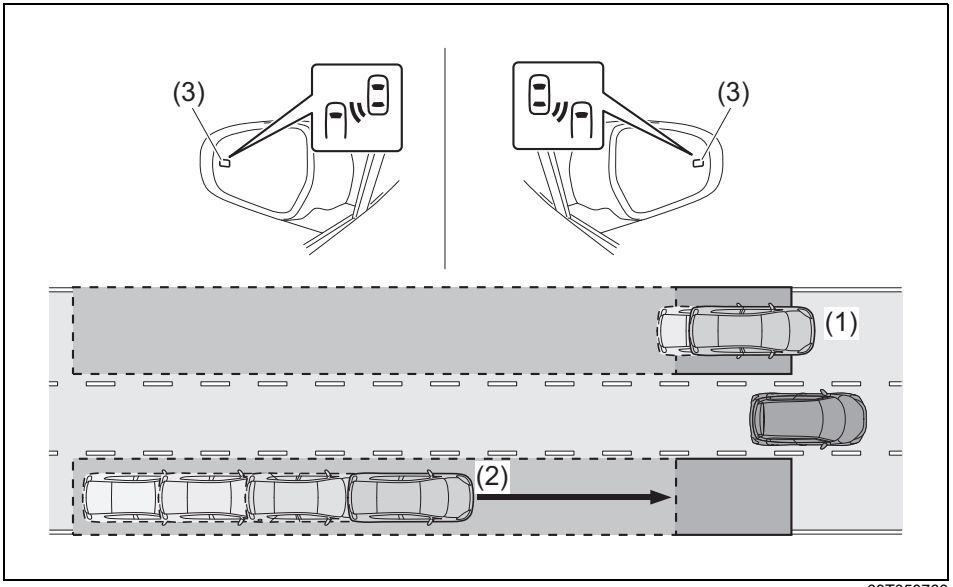

69T050760

(1) A vehicle running alongside in the area where the outside rearview mirror cannot reflect
(2) A vehicle rapidly approaching the area where the outside rearview mirror cannot reflect
(3) Indicator

When the driver operates turn signal control lever to the detected side, an interior buzzer sounds and the indicator on the outside rearview mirror blinks.

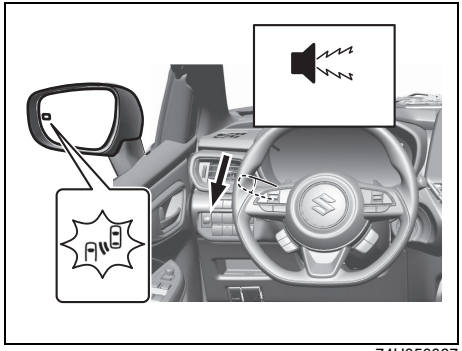

74U050067

Detecting area
Vehicle entering the following areas can be detected.

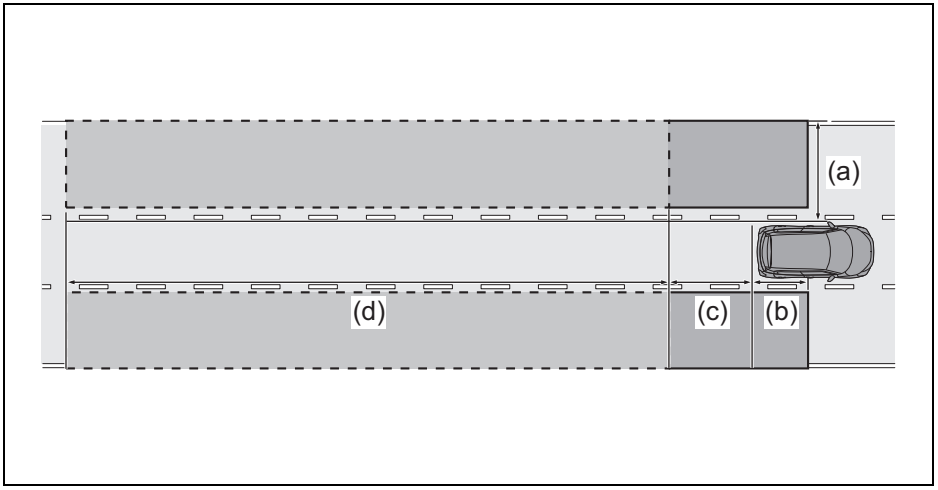

69T050770

(a) An area about 0.5 to 4.0 m (1.6 to 13.1 ft) from both sides of the vehicle
(b) An area between the rear bumper and near the driver's seat
(c) An area about 4.0 m (13.1 ft) behind the rear bumper
(d) An area between about 4 and 50 m (13.1 and 164 ft) behind the rear bumper

NOTE:
The greater the difference in speed between your vehicle and the detected vehicle is, the farther away the vehicle will be detected, causing the outside rearview mirror indicator to illuminate or blink.

Operating condition
When all the following conditions are satisfied, the BSM will actuate.
- When the BSM OFF indicator light is not indicated.
- When gearshift lever position is other than “R”.
- When vehicle speed is about 15 km/h (9 mph) or more.
- When the engine is running.

NOTE:
Using the setting mode in the information display, the BSM can be canceled. For details on how to use the information display, refer to “Setting Mode” (P.4-29).

Situations where the system does not activate
Vehicles shown below cannot be detected and the BSM will not activate.
- Small motorcycle, bicycle and pedestrian*
- Oncoming vehicle
- Vehicle running behind on the same lane*
- Vehicles traveling 2 lanes away from your vehicle*
- Guardrails, walls, signs, parked vehicles and similar stationary objects*

* Depending on conditions, detection of a vehicle and/or object may occur.

Situations where the system may not activate properly
Under the following situations, the BSM may not activate correctly due to ineffective detection.
When sensor or surrounding area on the rear bumper is covered with foreign materials such as dirt, snow, ice, etc. (remove foreign materials)
When sensor is misaligned in such a case as a strong impact to the sensor or the rear bumper
- When the tyres are slipping or spinning

When the distance between your vehicle and a guardrail, wall, etc., that enters the detection area is short
With a modified suspension (Altering the vehicle height, etc.)
When your vehicle is weighed down by heavy items in the luggage compartment
- When the battery has a voltage abnormality

When the temperature around the sensor is too high/low
- The entrance or exit of a tunnel

When rear visibility is poor due to exhaust gas, splash of water or snow, spray, sand or smoke
When two or more vehicles are approaching one after another continuously
- When distance to a vehicle behind is too close

When speed difference between your vehicle and a vehicle behind in the detecting area is too big
When vehicle speed between your vehicle and other vehicle in the detecting area is almost the same
When starting from standstill, another vehicle in the detecting area remains
When running on a steep uphill, downhill, continuous sharp curves or pavement joints
When running on road with rough, bumpy or uneven surface
When speed difference between your vehicle and other vehicle varies
When the other vehicle running on the neighboring lane is too far due to wide lane, running on edge of lane, etc.
When your vehicle is equipped with accessory such as carrier in the rear
When height difference between your vehicle and other vehicle in the detecting area is too big (A low-slung vehicle and sports cars etc.)

Sensor location
The sensors (1) are arranged in the rear bumper at right and left one by one.

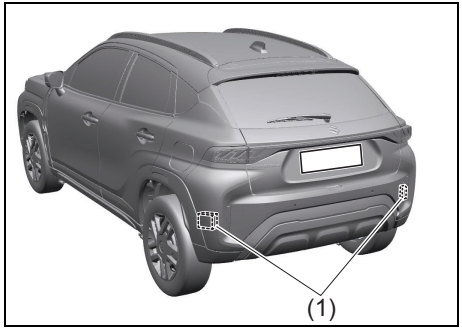

74U050025

⚠ WARNING

For correct activation of the sensor, you are requested to observe the following precautions. Lack of reasonable care of the sensor may cause detection error due to malfunction and lead to accident.
- **Keep the rear bumper around the sensors clean always.**
- **Do not give strong impact or pressure to the rear bumper. If the radar sensor periphery such as the radar sensor or rear bumper is deformed or damaged due to a contact accident, do not use the blind spot monitor and consult an authorized SUZUKI dealer or a qualified workshop**
- **Do not stick stickers on the rear bumper around the sensors.**
- **Do not modify the surrounding area on the rear bumper. In case the rear bumper gets damaged or the paint gets peeled off, the system may malfunction. If this occurs, consult an authorized SUZUKI dealer or a qualified workshop.**
- **Do not remove or disassemble the radar sensors or peripheral components.**

Stopping BSM /RCTA

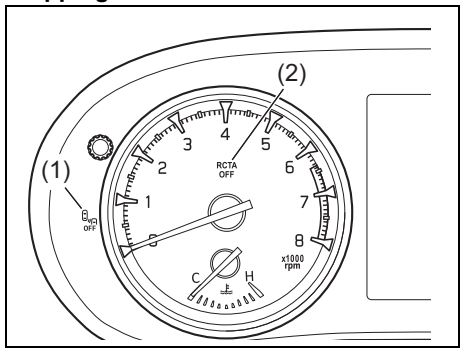

74U050077

(1) BSM OFF indicator light
(2) RCTA OFF indicator light

Using the setting mode on the information display, the BSM can be stopped. For details on how to use the information display, refer to “Setting Mode” (P.4-29). When the BSM is stopped, the BSM OFF indicator light (1) and RCTA OFF indicator light (2) come on.

In the following situations, the BSM OFF indicator light or RCTA OFF indicator light blinks and the system is deactivated.
- When the sensor or bumper is covered in snow, ice or dirt
- When the temperature around the sensor is too high/low

- When the mounting position or angle of the sensor is shifted
- When the battery voltage is decreased

If the light blinks and stays on, there may be a malfunction of the systems. You should have the systems inspected by an authorized SUZUKI dealer or a qualified workshop.

NOTE:
When the BSM is stopped, the RCTA is also stopped. When the BSM is ON, the RCTA can be stopped separately. For details about RCTA, refer to "Rear Cross Traffic Alert (RCTA) (if equipped)" (P.5-98).

Warning and indicator messages of BSM/RCTA

The information display shows the warning and indicator messages to let you know about certain problems.

Warning and indicator message	Warning indicator	Master warning indicator light	Sound	Cause and remedy
 69T050830 "BSM SYSTEM FUNCTION PAUSED"	Blinks  69T050850	Blinks 	Chime	BSM and RCTA are suspended. If the warning message remains after starting the engine again, have your vehicle inspected by an authorized SUZUKI dealer or a qualified workshop.
				BSM and RCTA are suspended due to dirt on sensor and rear bumper around the sensor. Remove the dirt from the sensor and rear bumper around the sensor, and restart the engine. If the warning message remains, have your vehicle inspected by an authorized SUZUKI dealer or a qualified workshop.
 69T050830 "BSM SYSTEM TEST REQUIRED"	Blinks  69T050850	Blinks 	Chime	There may be a problem with the BSM and RCTA. Have your vehicle inspected by an authorized SUZUKI dealer or a qualified workshop.

Rear Cross Traffic Alert (RCTA)

Rear Cross Traffic Alert (RCTA) detects the presence of a vehicle from the rear right or the rear left and tells you of the presence by the image in the information display and an interior buzzer. This system assists the driver when backing up.

⚠ WARNING

- **The RCTA is a supplemental device to tell you the presence of a vehicle approaching from the left and right rear when backing up. However, your responsibility for safe driving is the most important matter. Check around the vehicle using your direct vision or mirrors.**
- **Depending on the circumstances, the system may not work. Do not rely excessively on the system and always drive in a safe manner. Overreliance on this function may lead to an accident.**

While your vehicle is backing up, if the approaching vehicle from the rear right or the rear left is detected by the radar sensor, an interior buzzer sounds and the information display shows the following image such as (2) and/or (3). Also, the following image such as (4) and/or (5) as will be displayed on the rear view camera monitor (if equipped). In addition, the indicators (6) and (7) on both outside rearview mirror blinks.

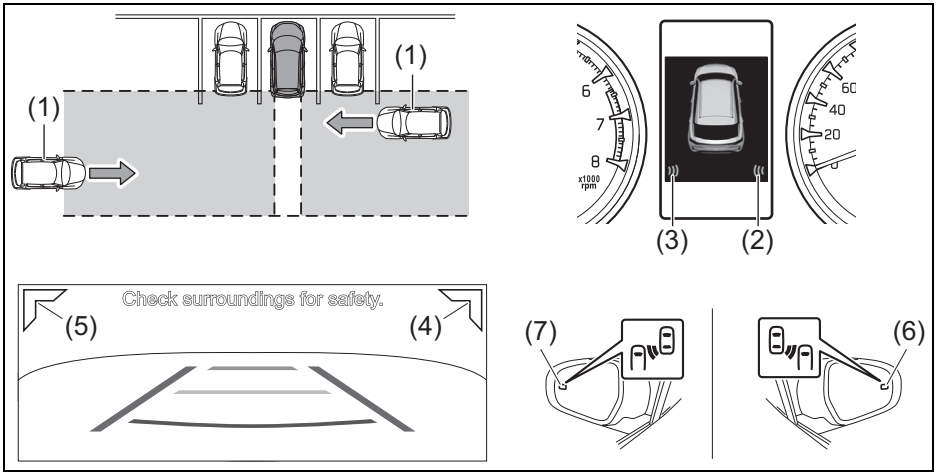

74U050068

(1) Approaching vehicle
(2) Approaching vehicle from the rear right
(3) Approaching vehicle from the rear left
(4) Approaching vehicle from the rear right
(5) Approaching vehicle from the rear left
(6) Indicator
(7) Indicator

Detecting area
Vehicle in the following area can be detected.

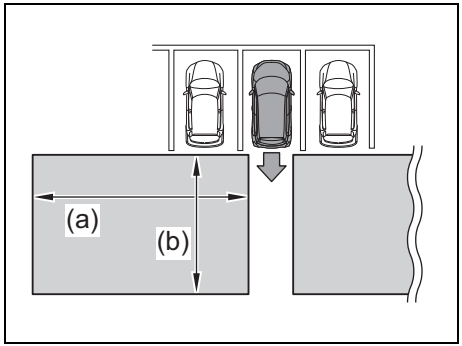

69T050880

(a) About 20 m (66 ft)
(b) About 8 m (26 ft)

Operating condition
When all of the following conditions are satisfied, the RCTA is activated.

- When the BSM OFF indicator light is not indicated
- When the RCTA OFF indicator light is not indicated
- When gearshift lever position is in “R” position
- When the retreating vehicle speed is about 8 km/h (5 mph) or below
- When approaching vehicle speed is approximately 3.6 to 90 km/h (2 to 56 mph)

NOTE:
- *Using the setting mode on the information display, RCTA can be stopped. For details on how to use the information display, refer to “Setting Mode” (P.4-29).*
- *If the BSM is stopped using the setting mode on the information display, the RCTA is also stopped.*

Situations where the system does not activate
The system does not detect the following vehicles, and the RCTA will not activate.
- Approaching vehicle from just behind
- A vehicle backing up from the neighboring parking space

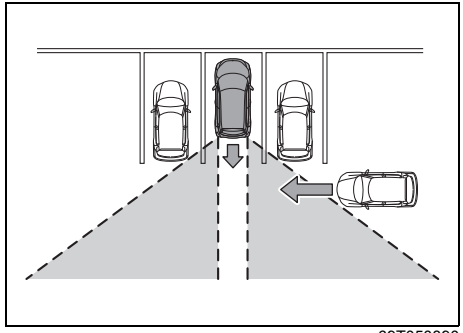

69T050890

- A vehicle cannot be detected due to an obstacle
- Parked vehicles and similar stationary objects*
- Small motorcycle, bicycle and pedestrian*
- A vehicle moving away from your vehicle

* Depending on conditions, detection of a vehicle and/or object may occur.

Situations where the system may not activate properly

Under the following conditions, the system cannot detect vehicle effectively and the RCTA may not activate properly.

- When sensor or surrounding area on the rear bumper is covered with foreign materials such as dirt, snow, ice, etc. (remove foreign materials)
- When there is bad weather such as a heavy rain, dense fog or blizzard
- When rear visibility is poor due to exhaust gas, splash of water or snow, spray, sand or smoke
- When sensor is misaligned in such a case as a strong impact to the sensor or the rear bumper
- When two or more vehicles are approaching one after another continuously
- A vehicle approaching in high speed
- When the battery has a voltage abnormality
- When the temperature around the sensor is too high/low
- A vehicle parked at a shallow angle
- In an environment with grates and gutters.
- Extreme changes in vehicle height (Nose up, nose down, etc.)
- When water splashes toward the sensor from sprinklers, etc.
- When a guardrail, wall, etc., is at a short distance and they are within the detection range.

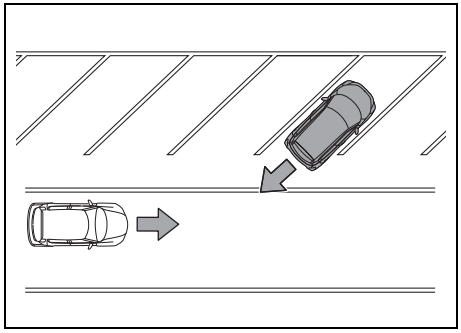

69T050900

Sensor location

For details, refer to “Sensor location” (P.5-95).

Stopping RCTA

For details, refer to “Stopping BSM /RCTA” (P.5-95).

Warning and indicator messages

The information display shows the warning and indicator messages to let you know about certain problems of the RCTA. For details, refer to “Warning and indicator messages of BSM/RCTA” (P.5-97).

Ultrasonic sensors

The ultrasonic sensor transmits ultrasonic, it hits an obstacle and the sensor receive the reflected ultrasonic again. The sensor will detect the position of the obstacle based on the time which takes for transmitting and receiving ultrasonic.

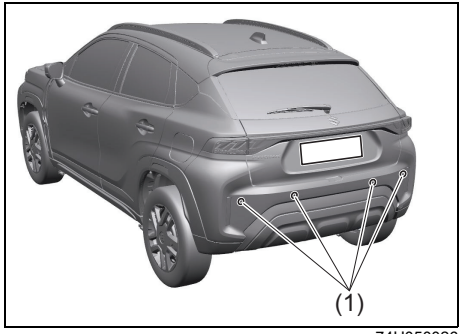

74U050026

(1) Ultrasonic sensors

- The position of each ultrasonic sensor in the above figure is a typical example; the actual equipment depends on the vehicle type.

⚠ WARNING

<u>To prevent malfunction of the ultrasonic sensor</u>

Observe the following precautions. Failure to do so may lead to the ultrasonic sensor not operating properly, possibly leading to an accident resulting in death or serious injury.

- **Keep the ultrasonic sensors clean at all times.**
- **Clean the ultrasonic sensors if it is dirty or covered with water droplets, snow, plastic bag, etc. Clean the ultrasonic sensors with a soft cloth so as to not mark or damage them.**
- **Do not attach accessories, stickers (including transparent stickers), etc. to the ultrasonic sensors and their surrounding area.**
- **Do not subject the ultrasonic sensors or their surrounding area to impact.**
  If the ultrasonic sensors or rear bumper has been subjected to a impact, have the vehicle inspected by an authorized SUZUKI dealer or a qualified workshop.
- **Do not change the position or orientation of the ultrasonic sensor or remove it.**
- **Do not disassemble the ultrasonic sensors.**

(Continued)

⚠ WARNING

(Continued)

- **Do not modify or paint the ultrasonic sensors or ultrasonic sensor covers, or replace them with anything other than SUZUKI genuine parts.**
- **When using a high-pressure cleaner, do not point the nozzle to the ultrasonic sensors.**
- **When using steam to clean the vehicle, do not direct steam too close to the ultrasonic sensors.**
- **In the following situations, an angle measurement/ initialization of the ultrasonic sensor will be necessary. Contact an authorized SUZUKI dealer or a qualified workshop for details.**
  - **When an ultrasonic sensor is removed and installed, or replaced**
  - **When the rear bumper has been replaced**

Temporary stop or failure of the ultrasonic sensor

	Instrument cluster	Information display message	Ultrasonic sensor	
			Temporary stop	Failure
(1)	 59S010120	–	On	
(2)	 80P0382	–	Off	Blinks
(3)	 69T040310	"CLEAN PARKING SENSORS"	Displayed	Not displayed
(4)	 69T040310	"SERVICE PARKING SENSORS"	Not displayed	Displayed

(1) Parking sensor indicator light
(2) Master warning indicator
(3) Indication of the rear parking sensor needs cleaning
(4) Failure of the ultrasonic sensor

NOTE:
When temporary stop of the ultrasonic sensor or failure of the ultrasonic sensor occurs, the parking sensors will stop.

Temporary stop of the ultrasonic sensor

The ultrasonic sensor will temporarily stop under the following situations. If the situations are improved, temporary stop of the ultrasonic sensor will be canceled.

- When any foreign object such as dirt, snow and ice is attached to the ultrasonic sensor
- When the battery has temporarily a voltage abnormality

Failure of the ultrasonic sensor
When the ultrasonic sensor is faulty, the function of the ultrasonic sensor is stopped until the engine switch is pressed to change the ignition mode to LOCK (OFF). Stop the vehicle in a safe place, press the engine switch to change the ignition mode to LOCK (OFF) and stop the engine. Then, restart the engine and check that the parking sensor indicator light is turned off.
If the parking sensor indicator light stays on after restarting the engine, there may be a failure of the ultrasonic sensor. Ask an authorized SUZUKI dealer or a qualified workshop to have the ultrasonic sensor inspected.

NOTE:
If the parking sensor indicator light comes on and there may be a failure of the ultrasonic sensor, the system will stop. However, there would not be a problem to normal driving.

When the ultrasonic sensor detects any foreign object
When the ultrasonic sensor detects any foreign object such as dirt, snow or ice which attaches to the sensor, the indication will be displayed on the information display as the following chart shows. When you remove the attached foreign object, the ultrasonic sensor will properly function again. While any foreign object is detected, the ultrasonic sensor will temporarily stop functioning. Even though no foreign object is attached to the ultrasonic sensor and the following indication is displayed, there may be a possibility of sensor abnormality. Ask an authorized SUZUKI dealer or a qualified workshop to have the ultrasonic sensor inspected.

Information display

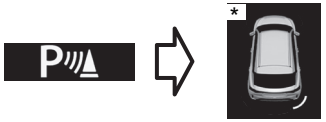

72U00109

"CLEAN
PARKING
SENSORS"

*The side which detects any foreign object is shown

Situations where the ultrasonic sensor may not activate properly
Under the following situations, the ultrasonic sensor may not activate properly.

- When any foreign object such as dirt, snow or ice is attached to the ultrasonic sensor (In this case, remove the foreign object)

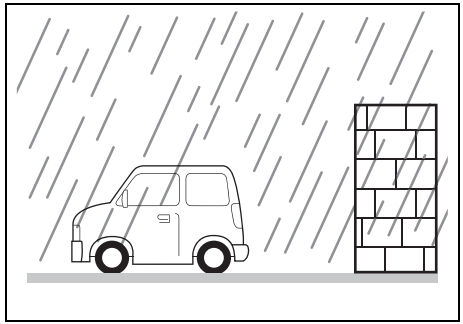

79R40400

- When it is bad weather such as heavy rain, fog or a blizzard
- When strong winds are blowing
- When backward visibility is poor due to exhaust gas from the vehicle, water, snow, water vapor, sand or smoke
- When the ultrasonic sensor is covered by a sticker or an accessory
- When a commercially-available electrical component such as a towing hook, a back-lit license plate, a fog lamp, a corner pole or a radio antenna is equipped

- When the vehicle position or the height of bumper is changed due to modification of suspension
- When the installed direction of rear parking sensors is misaligned due to a collision
- When snow chains or the tyres of undesigned size are equipped
- When the vehicle is inclined to drive over bumps on the road
- When the surrounding part of the ultrasonic sensor is hot or cold under the blazing sun or in extremely cold weather
- When humidity is extremely high or low

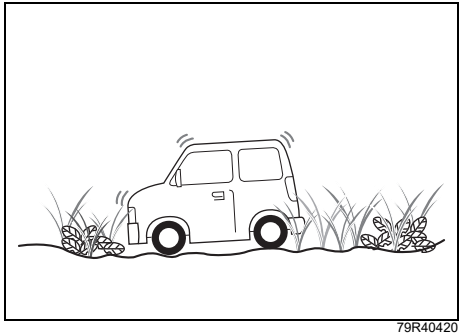

79R40420

- When you drive on rough road, slope, gravel or grown grass
- When your vehicle is severely inclined
- When there is any object which emits ultrasonic characteristics such as horn from the other vehicle, engine sound from a motorcycle, air brake sound from a large-size vehicle, brake sound, vehicle detector or ultrasonic sensor from the other vehicle
- When the ultrasonic sensor gets too close to an obstacle
- When the vehicle is moved in a diagonal direction towards an obstacle or to the edge or corner of a wall (reflected wave is not returned)

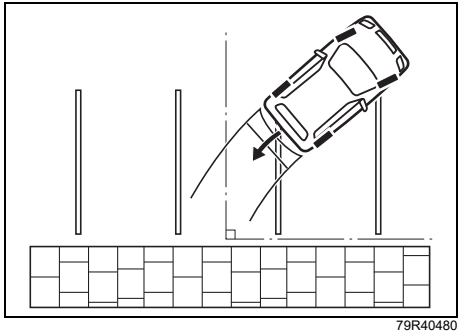

79R40480

- When an obstacle such as a wall is not in a vertical position of the vehicle
- A wall which is not in vertical position of the ground, a rough wall, a wall or shutter which has running wavy pattern
- A pole which is protruded from a wall or a pipe arrangement

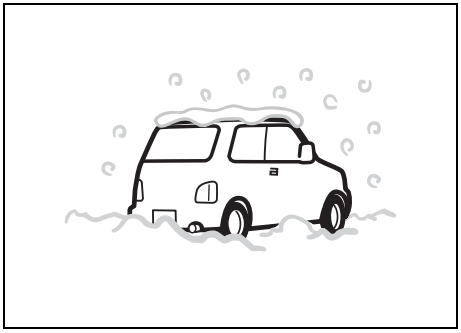

79R40470

- An object which easily absorbs sonic wave such as a person, a spongy object or a snow wall
- A moving object such as a pedestrian, a bicycle or an animal
- An object which suddenly rushes out into the traveling direction of the vehicle (while or immediately after the vehicle is turning around)
- The ultrasonic sensor may not detect the following obstacles:
  - An obstacle in the shape of pole such as a sign or a street lamp
  - A low-height obstacle such as a guardrail
  - A small obstacle or a thin obstacle such as a chain or a rope
  - A micromesh fence

Parking sensors

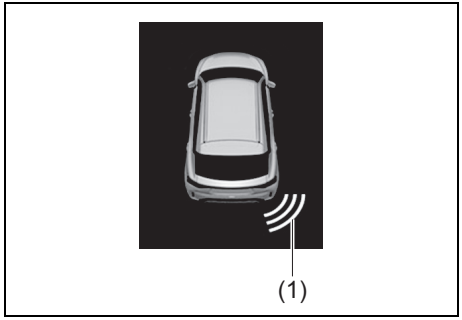

74U050014

(1) Symbol representing an obstacle detected by parking sensor*

*This symbol shows that an obstacle is located on the right rear of vehicle.

- The parking sensor system uses ultrasonic sensors to detect obstacles near the rear bumper. If obstacles are sensed while you are parking or moving the vehicle slowly, the system warns you by sounding a buzzer and displaying symbols representing the obstacles on the information display in the instrument cluster.
- The system emits an ultrasonic wave and the relevant sensor detects the return of the wave reflected by an obstacle. The system measures the time taken by the ultrasonic wave to reach the obstacle and return from it, from which it determines the obstacle's position.
- The parking sensor function can be used when you press the engine switch to change the ignition mode to ON and the gearshift lever is in the "R" position. This function is helpful in the following cases: pulling over to the curb; parallel parking the vehicle; steering the vehicle into a garage; driving along an alley; and moving slowly in a place with obstacles.

⚠ WARNING

- **The parking sensor warns you of obstacles with buzzers and by showing you the location of the obstacles on the information display. However, you still have to drive with particular care.**
- **The sensors can detect obstacles only within a limited area and only when the vehicle is moving within a limited speed range. So, in tricky areas, you must move the vehicle slowly while checking around it using your direct vision or rearview mirrors. There is increased risk of an accident if you control the vehicle relying only on the parking sensor.**

Sensor locations

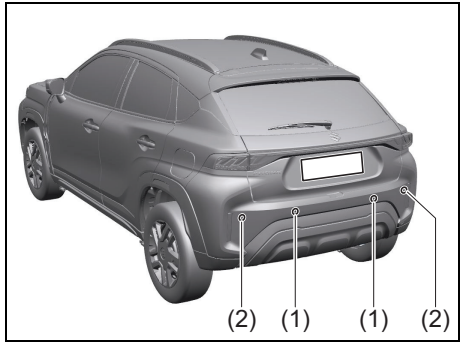

74U050027

(1) Rear center sensors (2 places)
(2) Rear corner sensors (2 places)

NOTICE

- **Avoid hitting the sensor areas or directing the nozzle of a high-pressure car washer onto the sensor areas. Otherwise, the sensors may be damaged.**
- **If the bumper hits a hard object, the sensors on it may not work properly. If this occurs, have the sensors inspected by an authorized SUZUKI dealer or a qualified workshop.**

Working sensors
The sensors work depending on the gearshift lever position and parking brake lever position as follows:

Gearshift lever position		Automatic transmission		Parking brake lever
		R	N, D, M	
Rear sensors	Center	On	Off	No relation
	Corner	On	Off	No relation

Approximate areas where obstacles can be detected

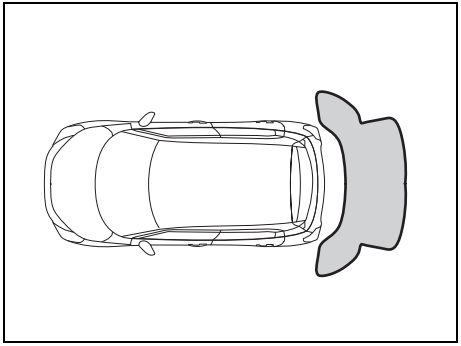

69T050740

- An obstacle within about 20 cm (8 in) from a sensor or just below a sensor is not detectable.
- The detection distance of rear corner sensors is within about 60 cm (2.0 ft).
- The detection distance of rear center sensors is about 150 cm (4.9 ft).

⚠ WARNING

- **Under the following conditions, the parking sensor system may not work normally because the sensors cannot detect obstacles correctly.**
  - **– Sensors are covered with mud, ice or other materials. (Such materials must be removed for normal operation.)**
  - **– Sensors are wet from water splashes or heavy rain.**
  - **– Sensors are covered by a hand, sticker, accessory, etc.**
  - **– There is an accessory or other object attached within the sensor's sensing area.**
  - **– Items such as tow hooks, commercially available corner poles, radio antenna, etc. are installed on the bumper.**
  - **– The height of the bumper is changed due to alteration to the suspension or other causes.**
  - **– The sensor areas are extremely hot from direct sunlight or cold due to freezing weather.**
  - **– The vehicle is on a rough surface, slope, gravel road or grass field.**
  - **– The vehicle is at a steep angle.**

(Continued)

⚠ WARNING

(Continued)

- **– Sensors have intercepted ultrasonic noise from another vehicle's horn, engine, air braking system (large vehicles), or parking sensor.**
- **– Obstacles are too close to the sensors.**
- **– Sensors are at an angle to a highly reflective object such as glass. (Ultrasonic waves are not reflected back from the obstacle.)**

- **Sensors may not be able to correctly detect the following types of obstacles:**
  - **– Objects made of a thin material such as wire netting and ropes**
  - **– Square-shaped curbstones or other objects with sharp edges**
  - **– Tall objects with a large upper part such as a road sign**
  - **– Low-profile objects such as curbstones**
  - **– Sound-absorbing objects such as cotton and snow**

NOTE:

- *Thin poles or obstacles lower than the sensors may become undetectable as the vehicle moves closer to them even if they have been detected from longer distances.*
- *The system may calculate the distance to a road sign or similar obstacle to be shorter than the actual distance.*

Obstacle indication by parking sensor

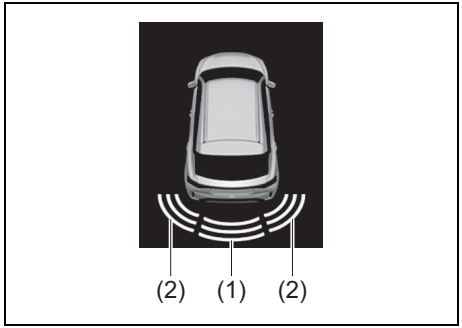

74U050015

(1) Obstacle detected by rear center sensors
(2) Obstacle detected by rear corner sensors

Upon detecting an obstacle, the parking sensor causes an interior buzzer to sound and a symbol representing the obstacle appears on the information display and the parking sensor indicator light blinks.

- A different symbol is displayed depending on the direction and distance of the obstacle.
- A buzzer located behind the rear seat sounds when a sensor at the rear detects an obstacle.
- Warnings when obstacles are detected by rear sensors

Distance (approx.)		Buzzer	Information display
center sensors	60 – 150 cm (24 – 59 in)	Short beeps at long intervals	
45 – 60 cm (18 – 24 in)		Short beeps at short intervals	
35 – 45 cm (14 – 18 in)		Short beeps at very short intervals	
Less than 35 cm (14 in)		Continuous beep	

NOTICE

- **If anything other than the buzzer explained in above table sounds, the sensor may be failure. Consult an authorized SUZUKI dealer or qualified workshop.**
- **If there is a malfunction of the parking sensor, the indicator light of the parking sensor buzzer OFF switch will not come on. If the indicator light of the parking sensor buzzer OFF switch does not come on, consult an authorized SUZUKI dealer or qualified workshop.**

NOTE:
- *Symbols are displayed with a short delay after the detection of obstacles.*
- *If the system detects multiple obstacles simultaneously, the display shows all of their positions using the corresponding symbols. However, the buzzers will sound only for the nearest obstacles.*
- *Even in places where the buzzer always sounds when an obstacle is detected, the buzzer may not sound depending on the situation.*
- *When the parking sensor detects an obstacle while it is operating, the parking sensor indicator light will blink.*

Warning and indicator messages
If there is a problem or warning regarding the parking sensor system, a message is displayed on the information display in the instrument cluster, and a symbol blinks. If a message is displayed, follow its instruction.

Indicator	Message	Symbol	Probable cause and remedy
	“SERVICE PARKING SENSORS”	Not displayed	There may be a problem with the parking sensor system. Have your vehicle inspected by an authorized SUZUKI dealer or a qualified workshop.
	“CLEAN PARKING SENSORS”	One blinking line in a sensor location.	The indicated sensor is contaminated. Wipe it clean with a soft cloth.

Situations where the parking sensor system does not activate
Under the following situations, the parking sensor system does not activate properly.
- For few seconds immediately after changing the ignition mode to ON
- When the gearshift lever is in “P”, “N”, “D” or “M” position
- When the position of the gearshift lever does not match the selector position shown in the information display, or when “–” is displayed
- When an obstacle cannot be detected
- When the parking sensor system is temporarily stopped or malfunctioning
  – For details, refer to “Temporary stop of the ultrasonic sensor” (P.5-102) and “Failure of the ultrasonic sensor” (P.5-103) in this section.

Parking sensor buzzer OFF switch

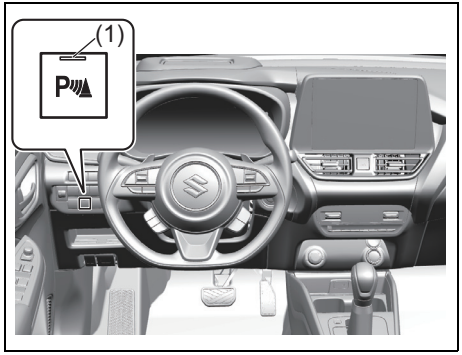

74U050069

If you press the parking sensor buzzer OFF switch when the interior buzzer sounds after detecting an obstacle, the buzzer will be temporarily stopped. The parking sensor buzzer OFF switch indicator light (1) goes out when the parking sensor buzzer is paused.
While the parking sensor buzzer is suspended, the buzzer will sound again under the following conditions.

- When the parking sensor buzzer OFF switch is pressed again
- When you shift the gearshift lever from a position other than R to R

NOTE:
Depending on the surrounding conditions, the parking sensor buzzer may sound again when an obstacle is detected while the buzzer is temporarily stopped.

Head-up Display

Head-up display (HUD) will show the information such as the current vehicle speed and the gear position in the driver's front vision.

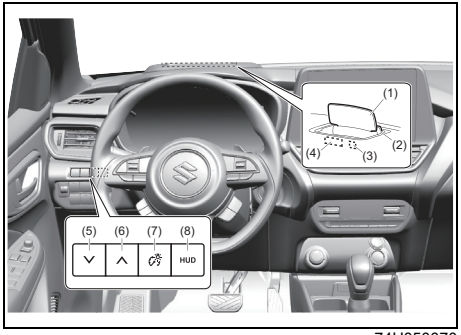

74U050070

(1) Display
(2) Cover
(3) Light-received surface
(4) Mirror
(5) Down switch
(6) Up switch
(7) Brightness control switch
(8) HUD (Head-up display) switch

⚠ WARNING

- **Do not continue to look at the head-up display while driving. Otherwise, you may not find the vehicle, pedestrians or obstacles in front of you. This could result in an accident.**
- **Adjust the display brightness and position to your preference not to obstruct a safe driving. If adjustment is not performed properly, it could result in an accident.**
- **Operate the head-up display while the vehicle is stopped. If you attempt to operate the display while driving, you may not look ahead carefully. This could result in an accident.**

⚠ CAUTION

When the head-up display is moving, do not put your hands closer to it. Your hands may get caught in it and get injured.

NOTICE

- **Performing the following points may prevent the proper operations of the head-up display and result in its malfunction. Observe these points.**
  - **– Do not adjust the display angle by your hands. Do not open or close the cover by your hands.**
  - **– Do not place any object or drink on the cover, its peripheral part and the light-received surface.**
  - **– Do not place stickers, etc. to the display, the inside of the cover and the light-received surface.**
  - **– Do not shine a strong light on the light-received surface.**
- **If you drop any object inside the cover, carefully pick it up not to injure the part such as the mirror.**
- **Ask an authorized SUZUKI dealer or a qualified workshop, if you drop any object inside the place where the head-up display is stored and you cannot pick up the object or the head-up display is stuck inside.**
- **Do not wipe the HUD cover forcefully. When you wipe it off, use a soft cloth.**

NOTE:

- *If you wear your sunglasses, you may have trouble seeing the displayed information. In this case, adjust the brightness or take your sunglasses off.*
- *You may have trouble seeing the displayed information in the following cases.*
  - *– On a rainy day or a day with strong sunlight*
  - *– When driving on snowy roads or when a wet road is shining after the rain*
  - *– When the headlights from your vehicle is reflected to the vehicle in front of you at night*
  - *– When the position of the vehicle in front of you and the displayed information get overlapped*
  - *– Depending on the driving posture*
- *Under the very cold condition, the vehicle speed on the speedometer and the one on the head-up display may differ a little.*
- *When the head-up display gets hot, such as after parking the vehicle under the blazing sun, the displayed information may temporarily become dark for its protection. When the head-up display gets hotter, the displayed information will temporarily disappear and the message will be shown on the information display of the instrument cluster.*
  - – When the temperature becomes low, the above condition will be canceled. However, if the above condition is

kept, ask an authorized SUZUKI dealer or a qualified workshop.
– *You can turn off the message on the information display in high temperature by changing the setting (customization). For details, refer to "Setting Mode" in "INSTRUMENT CLUSTER" section.*

Activation of the head-up display

When you press the engine switch to ON mode and the engine starts, the head-up display will automatically appear and the following information will be displayed as necessary.

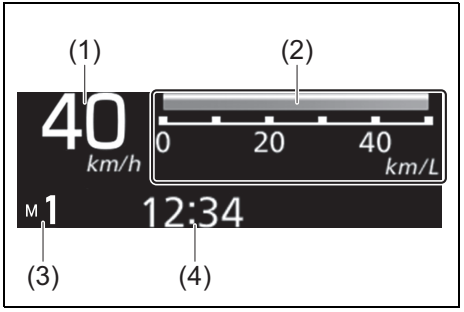

74U050032

(1) Vehicle speed
(2) Standard display
(3) Gear position indicator
(4) Clock

When you press the engine switch to ACC or LOCK (OFF) mode, the head-up display will be automatically stored.

NOTE:
- *Even if you stop the engine, the display setting will be stored.*
- *The vehicle speed on the head-up display and the one on the speedometer may differ a little.*
- *You can turn off a part of the information by changing the setting (customization).*

Operation of the head-up display

Operate the head-up display while the vehicle is stopped. You cannot adjust the brightness and the displayed position while driving.

Head-up display operation switch

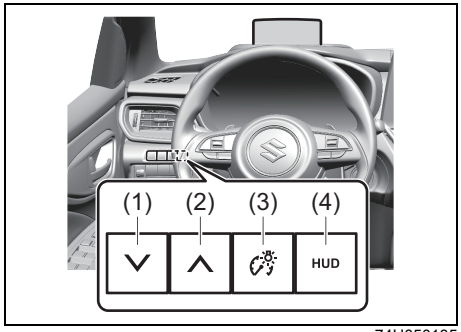

74U050135

(1) Down switch
(2) Up switch
(3) Brightness control switch
(4) HUD (Head-up display) switch

ON / OFF operation of the head-up display

If you press and hold the HUD (Head-up display) switch (4) with the engine on, you can make the head-up display appear or store.

NOTE:
If you store the head-up display inside by operating the HUD (Head-up display) switch and stop the engine, the head-up display will not appear automatically on the next engine start.

ON / OFF operation of the intersection guidance display (When using Android Auto™*1 or Apple CarPlay*2 on infotainment system)

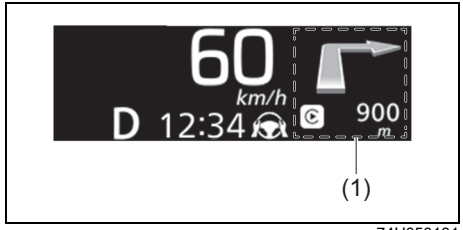

74U050131

(1) The intersection guidance display (The above image is an example of Apple CarPlay.)

NOTE:
- *For ON / OFF operation of the intersection guidance display, you need to change the setting on the information display. For details, refer to "Setting Mode" in "INSTRUMENT CLUSTER" section.*
- *The intersection guidance display on the head-up display and the one on the navigation system may differ a little.*

*1: Android Auto™ may not be available in your country or region.
For details about Android Auto™, refer to http://support.google.com/androidauto
*2: Apple CarPlay may not be available in your country or region.
For details about Apple CarPlay, refer to https://www.apple.com/ios/carplay/

Brightness control

Brightness of the display will be automatically adjusted depending on the surrounding conditions. You can adjust the brightness to your preference by the following steps.

1) Press the brightness control switch (3).
2) To make the display brighter, press " ∧ " of the up switch (2). To make the display darker, press " ∨ " of the down switch (1).



74TBX05060

NOTE:
- *You can adjust brightness of the display from −10 to +10 (21 levels) by the brightness control switch.*
- *Depending on brightness which was automatically adjusted, you may not be able to make the display brighter or darker.*
- *Regardless of the driver's seat conditions, brightness may be automatically changed in the following conditions.*
  – *When driving in a tunnel or around its gateway*
  – *When driving on a road where there is a structural object over your head*

Adjustment of the displayed position

Press the down switch (1) or up switch (2) to adjust the displayed position of the head-up display.



74TBX05061

NOTE:
- *You can adjust the displayed position of the head-up display from −12 to +12 (25 levels) by the up/down switch.*

Displayed information of the head-up display

Activation / ending of the head-up display

When the engine switch is pressed to change the ignition mode to ON and the engine starts, the head-up display will automatically activate and the following images will be displayed.



74TBX05062

Standard display of the head-up display

Every time you press the HUD (Head-up display) switch, the displayed information will be changed as follows.

- The following images are typical examples; they depends on the vehicle type.

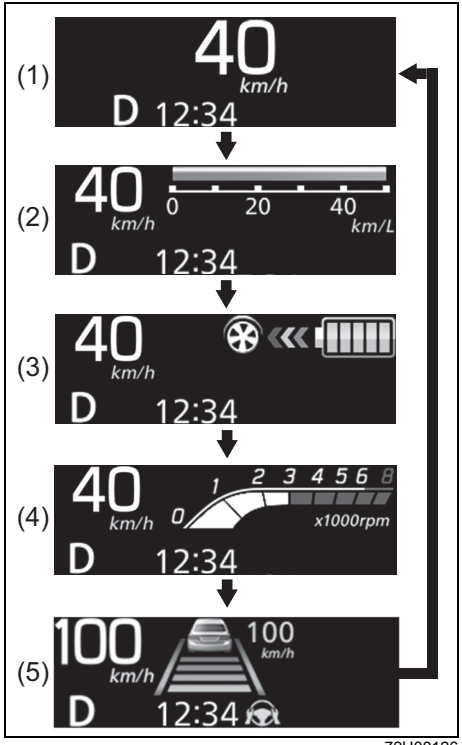

72U00126

(1) Vehicle speed
(2) Instantaneous fuel consumption
(3) Energy flow
(4) Tachometer
(5) Driving assistance

NOTE:

- *Even if you stop the engine, the display setting will be stored.*
- *The vehicle speed on the head-up display and the one on the speedometer may differ a little.*

When operating the air conditioner

If you operate the air conditioner with instantaneous fuel consumption, energy flow, tachometer, driving assistance displayed, the following images will be displayed.



53U05620

When you press “AUTO” switch, “AUTO” and the set temperature will be displayed for a certain time.

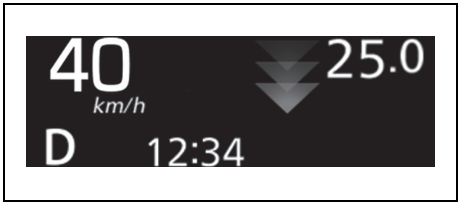

53U05630

When you operate the temperature selector, the set temperature will be displayed for a certain time.

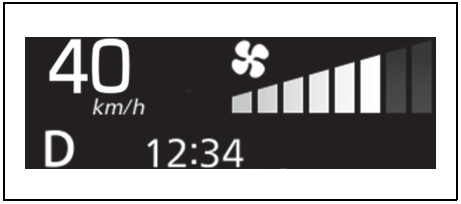

53U05640

When you operate the blower speed selector, the blower speed will be displayed for a certain time.

NOTE:

- *When the vehicle speed is displayed in standard display of the head-up display, the air conditioner setting will not be displayed.*
- *You can hide the information of air conditioner by the setting mode on the information display. For details, refer to “Setting Mode” in “INSTRUMENT CLUSTER” section.*

Interrupt display
When there is the information to tell you and you press the engine switch to ON mode, the following interrupt display will appear. Depending on the type of the display, a buzzer may sound at the same time.
• The following images are typical examples; they depends on the vehicle type.

Display	Buzzer	Description
 55T050810	Beeps at long intervals	When one of doors or the bonnet is not completely closed, the interrupt display will appear. If you are driving your vehicle, stop the vehicle in a safe place and close completely.
 55T050820	Beeps at short intervals	When the parking brake is not released while driving, the interrupt display will appear. Stop the vehicle in a safe place and release the parking brake.
 55T050830	Chime (Once)	When the fuel level is low, the interrupt display will appear. Refill the fuel tank as soon as possible.

Display	Buzzer	Description
 55T050840	Beeps at long intervals	The driver does not wear his/her seat belt. Stop the vehicle in a safe place and wear your seat belt. The passenger does not wear his/her seat belt. Wear the seat belt.
 74U050029	Beeping at short intervals	The Dual Sensor Brake Support II (DSBS II) is operating.
 55T050850	–	When outside temperature nears freezing, this interrupt display will appear.
 53U05680	–	The adaptive cruise control system is operating.

Display	Buzzer	Description
 72U00241	–	Displayed when M mode is being used.
 53U05710	Off	The intersection guidance is displayed. (When using Android Auto™ or Apple CarPlay on infotainment system) For details, refer to “ON / OFF operation of the intersection guidance display” in this section.
 74U050030	Beeps at short intervals	Indicates that the vehicle deviates from the lane repeatedly. Hold the steering wheel and operate it.
 74U050030	Off	The lane keep assist system is about to stop. Hold the steering wheel and operate it.

Display	Buzzer	Description
 Red 74U050031	Beeps at short intervals	The lane keep assist system is about to stop. Hold the steering wheel and operate it.
 Red 74U050031	Continuous beeps	The lane keep assist system has stopped. Hold the steering wheel and operate it.

License of the head-up display
The software of the head-up display includes some open software.
See the following for details:
http://car.panasonic.jp/oss/m02lpz2d

Copyright The Mbed TLS Contributors
SPDX-License-Identifier: Apache-2.0

Licensed under the Apache License, Version 2.0 (the "License");
you may not use this file except in compliance with the License.
You may obtain a copy of the License at

    http://www.apache.org/licenses/LICENSE-2.0

Unless required by applicable law or agreed to in writing, software
distributed under the License is distributed on an "AS IS" BASIS,
WITHOUT WARRANTIES OR CONDITIONS OF ANY KIND, either express or implied.
See the License for the specific language governing permissions and
limitations under the License.

360 View Camera

The 360 view camera is the function which shows visual image for the surrounding of your vehicle on the infotainment system screen, using the front camera, the side camera (left and right) and the back camera. This helps the driver improve visibility when the driver tries to park your vehicle, go by an oncoming vehicle in a narrow road or start the vehicle with poor visibility for left and right sides of the vehicle.

- Use the infotainment system which corresponds with the 360 view camera.

Camera positions

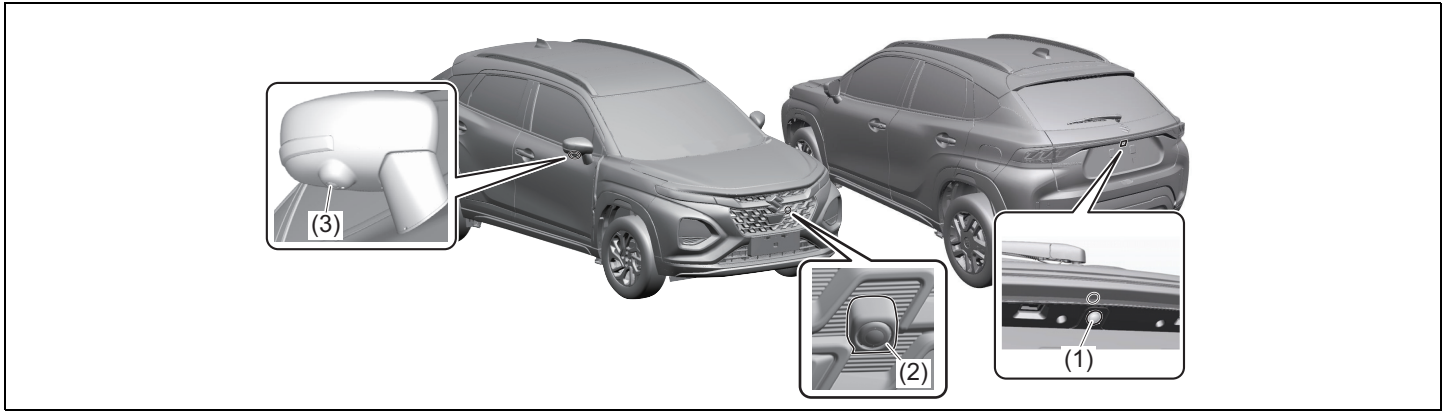

74U050083

(1) Back camera
(2) Front camera
(3) Side camera (under left and right outside rearview mirrors)

- Each camera in the above figure is a typical example; the actual equipment depends on the vehicle type.

⚠ WARNING

- **The 360 view camera cannot reduce the driver's duty of care for driving operation. Use the 360 view camera only to provide driving assistance.**
- **The 360 view camera has limits and it may not show a person or an obstacle. Drive your vehicle slowly confirming the safety of the backward and the surrounding conditions by directly checking with your eyes and mirrors. If you drive your vehicle only by checking the 360 view camera, an accident may occur.**
- **The cameras are precision instruments. Do not apply excessive force to the cameras, disassemble them and modify them. Also, do not pour hot water to the cameras and poke them with a stick to remove mud or frozen snow on the cameras. Doing so may damage the cameras and cause a fire and malfunction.**
- **Do not use the 360 view camera, when the outside rearview mirrors are folded and any of front doors and the tailgate is not closed. The image of the surrounding area may not be displayed properly and an accident may occur.**

NOTICE

If you use the 360 view camera for a long period of time with the engine stopped, the lead-acid battery could run out. Do not use the 360 view camera for a long period of time with the engine stopped.

NOTE:

- *Rough indication lines of vehicle width will be displayed more widely, compared with an actual vehicle width. Drive your vehicle by directly checking the safety of the surrounding conditions.*

How to use the 360 view camera

3D view mode function
The 360 view camera will display the image of the surroundings with a view from the outside or the inside of the vehicle.

1) Press the engine switch to change the ignition mode to ON.
2) After the opening image was displayed, 3D view mode will be automatically displayed on the screen.

Pattern 1
(Default setting)

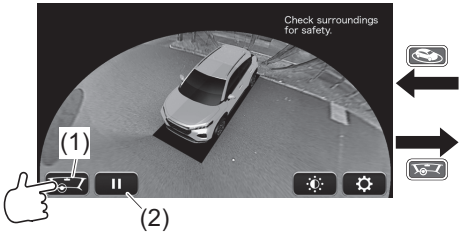

The 360 view camera will display the image of the surroundings with a view from the outside of the vehicle.

Pattern 2

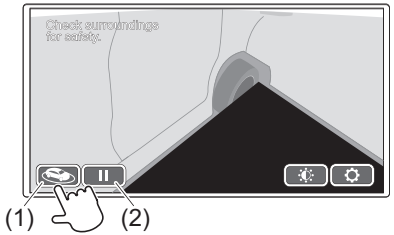

The 360 view camera will display the image of the surroundings with a view from the inside of the vehicle.

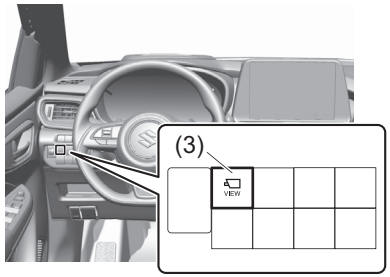

74U050098

3) For switching the current image to the image with a different view, touch the image switching button (1) on the screen. For temporarily stopping the rotation of 3D view mode, touch the temporary stop or replay button (2). For restarting the rotation of 3D view mode, touch the button (2) again.

NOTE:
- *If you press the camera switch (3) when the gearshift lever is in "P" position, you can display 3D view mode.*
- *You can change the display screen of 3D view mode by changing the setting.*
- *When you press the camera switch while the opening image is displayed, 3D view mode will end. If you display 3D view mode, follow the procedure below.*
  3D view mode → Press the camera switch → Change the mode of display → Press the camera switch → End of 3D view mode
- *When the engine switch is in ACC mode, 3D view mode will not be displayed on the screen.*

Displaying the forward of the vehicle

1) Press the engine switch to change the ignition mode to ON.
2) Shift the gearshift lever into a position other than “P” or “R”.
3) Press the camera switch (1). “Top image and forward image” (default setting) will be displayed.

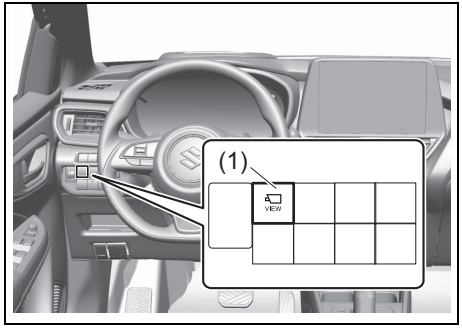

74U050099

4) Every time you touch the image switching button (2), the image will be changed as follows:

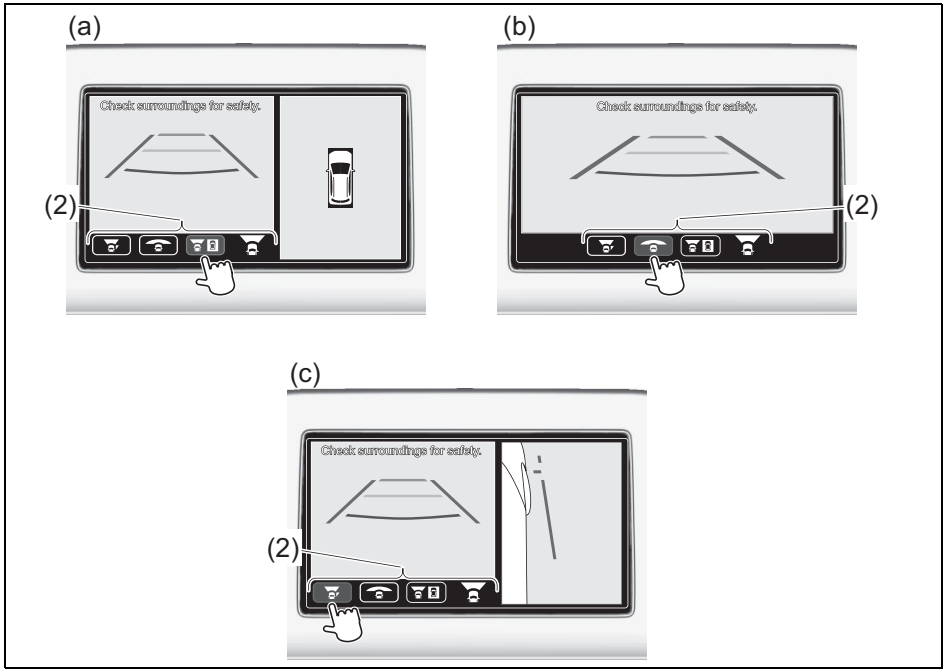

74U050100

(a)Top image and forward image (Default setting)
The 360 view camera will display the surrounding image and the forward image.

(b)Forward wide image
The 360 view camera will display the forward image widely.

(c)Side image and forward image
The 360 view camera will display the image under the front passenger's seat and the forward image.

- When you press the camera switch, the current image will be changed to the previous image.
- Even when you do not press the camera switch, the current image will be changed to the previous image by the following methods:
  – When 3 minutes passed after you press the camera switch
  – When you operate the infotainment system
  – When the vehicle speed becomes over about 10 km/h *(6 mph)*
- When the vehicle speed becomes over about 10 km/h *(6 mph)* and you press the camera switch, you can display the side image on the screen. When the vehicle speed becomes about 10 km/h *(6 mph)* or less, the forward image will be displayed on the screen.

NOTE:
- *For adjusting the image quality and setting up the initial display image, shift the gearshift lever into "P".*
- *When the engine switch is in ACC mode, the camera image will not be displayed.*

Displaying the backward of the vehicle

1) Press the engine switch to change the ignition mode to ON.
2) Shift the gearshift lever into “R” (Reverse). “Top image and backward image” (default setting) will be automatically displayed.
3) Every time you touch the image switching button (1), the image will be changed as follows:

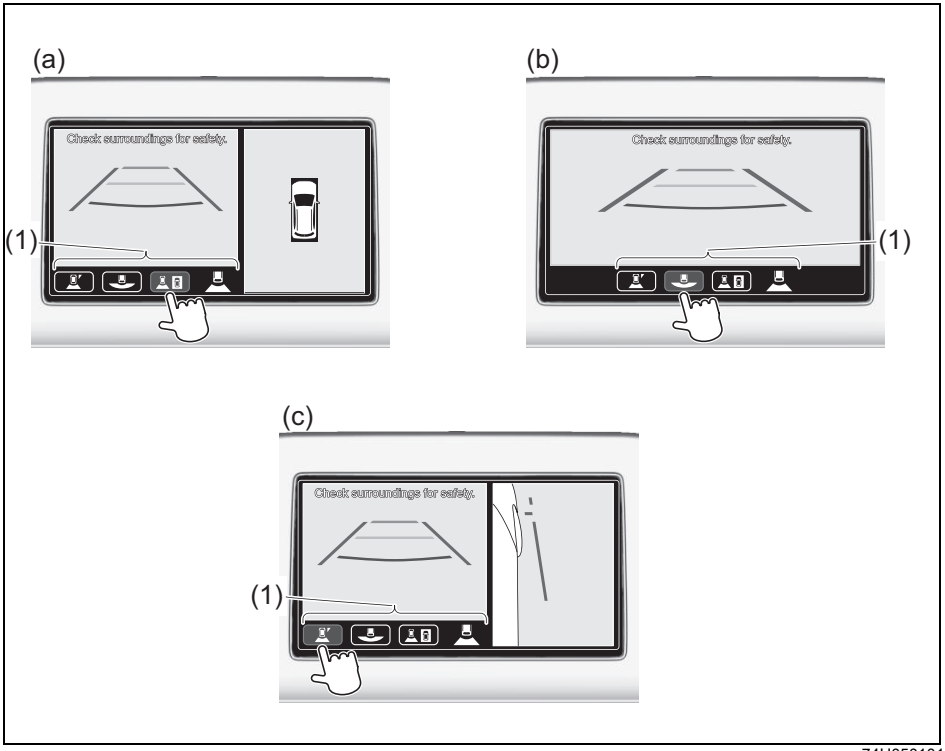

74U050101

(a)Top image and backward image (Default setting)

The 360 view camera will display the surrounding image and the backward image.

(b)Backward wide image

The 360 view camera will display the backward image widely.

(c)Side image and backward image

The 360 view camera will display the image under the front passenger's seat and the backward image.

When you shift the gearshift lever other than “R”, the camera image will return to the previous one.

NOTE:
- *The backward image of the 360 view camera is displayed as the top priority out of all the images. However, when the infotainment system itself is being activated, the backward image will not displayed.*
- *For adjusting the image quality and setting up the initial display image, shift the gearshift lever into “P”.*
- *When the engine switch is in ACC mode, the camera image will not be displayed.*

Error display on the screen
When there is an abnormality in the camera system, the following mark will be displayed on the screen.
Consult an authorized SUZUKI dealer or a qualified workshop to have the camera system inspected.

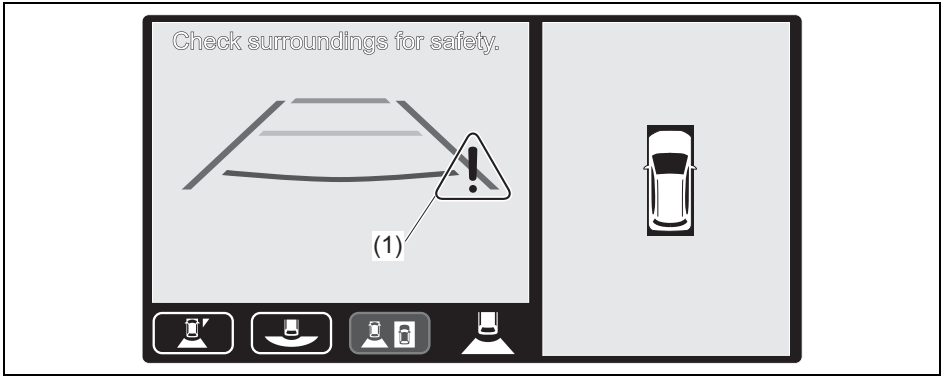

74U050102

(1) Error mark of camera system

How to understand the displayed items on the screen
The following guide lines and buttons will be displayed on the screen.
The guide lines would provide a rough indication for your driving operations.

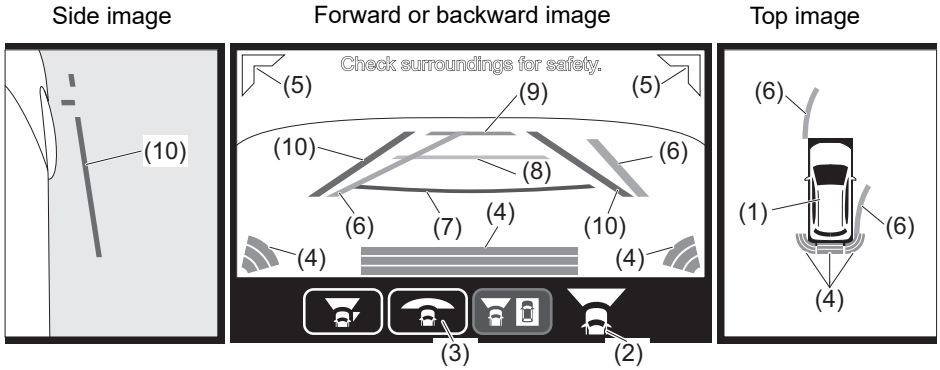

74U050104

- Each displayed item in the above figure is a typical example; it depends on the vehicle type.

No.	Displayed item	Contents
(1)		This shows the position of your vehicle.

No.	Displayed item	Contents
(2)		This shows that the forward image is displayed.
		This shows that the backward image is displayed.
(3)		This shows that the top image and forward image are displayed.
		This shows that the top image and backward image are displayed.
		This shows that the forward wide image is displayed.
		This shows that the backward wide image is displayed.

No.	Displayed item	Contents
(3)		This shows that the side image and forward image are displayed.
		This shows that the side image and backward image are displayed.

No.	Displayed color	Item name	Contents
(4)	Green or yellow or red	Indication detected from the rear parking sensors	When the rear parking sensors detects a wall or an obstacle is reversing, this icon is displayed.
(5)	Yellow	Rear cross traffic alert (RCTA) detection display	Displays when a vehicle is detected coming into proximity from the rear left or right when reversing at low speed. For details, refer to “Rear Cross Traffic Alert (RCTA)” (P.5-98).
(6)	Green	Guide line for the course	In conjunction with your operations of the steering wheel, this shows the guide line of predicted course when your vehicle moves forward or backward. *

No.	Displayed color	Item name	Contents
(7)	Red	Guide line for the distance	This shows the guide line of the position where is about 0.5 m (1.6 ft) forward or backward from the center of bumper front-end or bumper back-end
(8)	Yellow		This shows the guide line of the position where is about 1 m (3.3 ft) forward or backward from the center of bumper front-end or bumper back-end.
(9)	Light blue		This shows the guide line of the position where is about 2 m (6.6 ft) forward or backward from the center of bumper front-end or bumper back-end.

*: When the steering wheel is in straight position, the top image and the guide line for the course of forward/backward movement will not be displayed.

(10)	Purple	Guide line for the vehicle width (vertical line)	This shows the guide line of the position where is slightly outside of the vehicle width (including the width of outside rearview mirrors).
		Guide line for the vehicle width (horizontal line)	This shows the guide line of the position where is the most front-end of the vehicle.

- As each guide line is displayed towards road surface, the distance from your vehicle to an obstacle such as the parked vehicle near your vehicle is not accurately displayed. Also, as the top image is displayed by processing the image based on a flat road surface, the position of an obstacle (such as the bumper of the other vehicle) where is higher than the road surface is not accurately displayed.
- Trapezoidal guide lines for the distance and the vehicle width which are displayed on the screen are rough indications and they depend on the actual distance and vehicle width.
- If you modify suspensions or replace a tyre by the undesignated tyre, the guide lines and the top image will not be accurately displayed.
- The buttons on the screen are displayed by pressing.

⚠ CAUTION

- **The top image is the quasi-image which combines and processes several images from the cameras on the outside rear-view mirrors, the forward of your vehicle and the backward of your vehicle. Therefore, the top image may be displayed as follows:**
  - **– A steric object is displayed as if it is fell down.**
  - **– If the position of a steric object is higher than the road surface, the object is displayed farther away or it is invisible.**
  - **– A steric object is not displayed out of the screen or its position is misaligned.**
- **A steric object on the forward image or the backward image may not be displayed on the top image.**
- **On the top image, the lines on the road may be misaligned on the frame of screen or these lines may look bended. The farther distance from your vehicle there is, the much misalignment the lines have.**
- **When the position of a camera is misaligned, the images or the guide lines may be misaligned. Ask an authorized SUZUKI dealer or a qualified workshop to have the camera inspected.**
- **On a snowy road or a slippery road surface, the guide line for the course and the actual course may be different.**
- **As the icon of vehicle on the top image is displayed by a computer graphics, it is different from color, shape and size of the actual vehicle. Therefore, the position between your vehicle and the road surface or obstacles may be different from the actual position.**
- **On the top image, the brightness of the image from each camera may vary depending on brightness conditions.**
- **After an image is switched to the other image, it may be displayed late. Until the 360 view camera is completely displayed, the image may be temporarily distorted.**
- **The camera of the 360 view camera uses a special lens. Therefore, the displayed distance and the actual distance may look different and the target object may be displayed as a distorted image. The farther distance from your vehicle there is, the much tendency these situations have.**
- **As the wide image displays a large range, it displays a significantly-distorted image. Also, the distance on the wide image looks different from the actual distance.**

NOTE:
When you activate the infotainment system or there is abnormality on the touch panel, you cannot operate the buttons. In this case, wait for a while. Or, press a camera switch to go back to the original displayed screen, press a camera switch again and operate the buttons while the screen is displayed.
If you cannot operate the buttons by performing the above procedure, Consult an authorized SUZUKI dealer or a qualified workshop.

Difference between the camera image and the actual road surface
The position and distance which the guide lines on the screen shows vary depending on the number of passengers, the load capacity, the inclination and situation on the road surface. Directly check safety of the surroundings with your eyes.

When there is an uphill slope on your movement direction
You will see the guide line for the distance in front of the actual distance.

Backward image (Example):

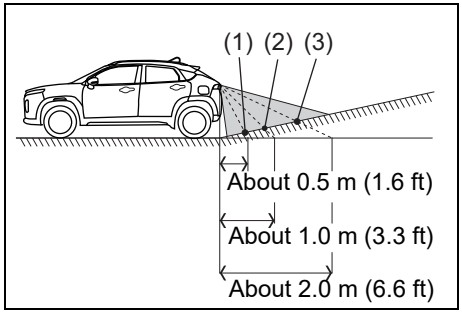

74TBX05080

(1) Red, the point which the guide line for the distance (about 0.5 m [1.6 ft]) shows
(2) Yellow, the point which the guide line for the distance (about 1.0 m [3.3 ft]) shows
(3) Light blue, the point which the guide line for the distance (about 2.0 m [6.6 ft]) shows

When there is an downhill slope on your movement direction
You will see the guide line for the distance in the back of the actual distance.

Backward image (Example):

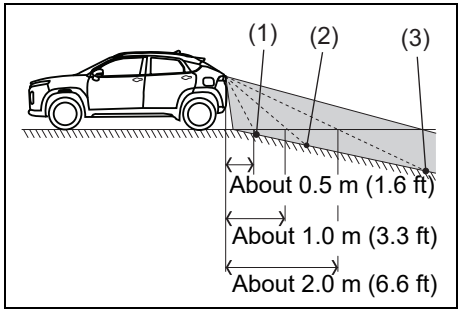

74TBX05081

(1) Red, the point which the guide line for the distance (about 0.5 m [1.6 ft]) shows
(2) Yellow, the point which the guide line for the distance (about 1.0 m [3.3 ft]) shows
(3) Light blue, the point which the guide line for the distance (about 2.0 m [6.6 ft]) shows

When there is an steric object near your vehicle
In this case, the distance from your vehicle to the steric object may be different from the actual distance.

Example 1:

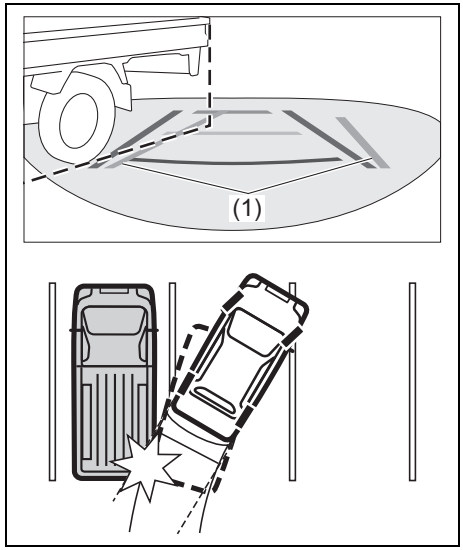

74TBX05082

In the illustration, the guide line for the course (1) does not touch the body of the displayed truck. However, if the body of this truck protrudes on the actual course which your vehicle will go, a collision may occur.

Example 2:

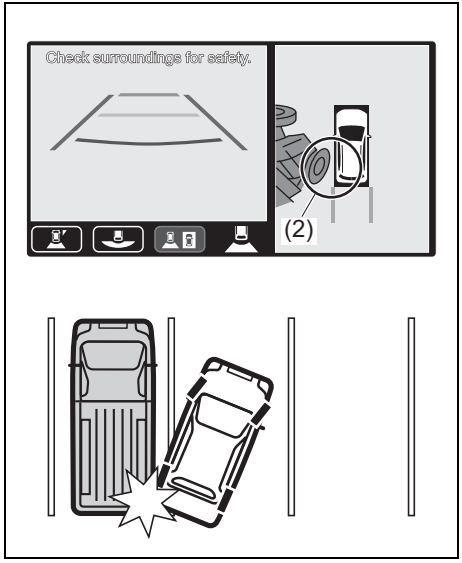

74U050105

In the illustration, the top image (2) shows that there is a little distance between your vehicle and the body of the displayed truck. However, the actual distance is shorter than the displayed distance and a collision may occur.

Displayed areas on the screen

- The areas of next image will be displayed on the screen. However, the areas around and under the front bumper and the rear bumper will not be displayed.
- The areas above a camera will not be displayed. If an obstacle is high or the upper part of an obstacle protrudes, such as a sign, the upper part will not be displayed on the screen.
- A feeling of distance on the image of the 360 view camera is different from the actual distance.
- If there is an obstacle such as an parked vehicle on the areas which are displayed on the screen, it may be displayed different from the actual distance.
- The backward image may be inverted on the screen, which is the same as you look the image on the inside rearview mirror or the outside rearview mirrors.
- As the front camera and the back camera are installed on the places which are a little misaligned from the center of your vehicle, the forward image and the backward image will be displayed with a little misaligned positions.

The image of view area by the 360 view camera

⚠ CAUTION

The specified areas will become blind spots which will not be displayed on the screen. Make sure to directly check the safety with your eyes.

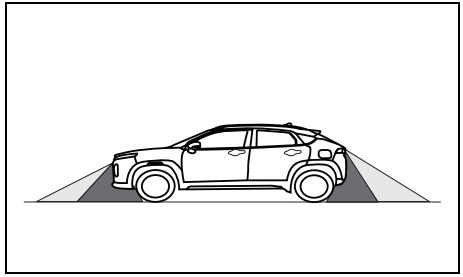

74TBX05084

- The areas under the front bumper and the rear bumper or the ground surface which is indicated in the below illustration may not be displayed on the screen.

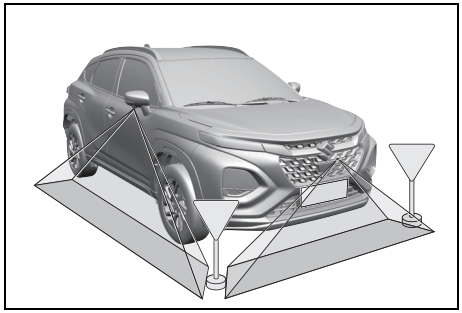

74U050106

- On the top image, an object near the edge of areas which a camera displays and an object which is higher than the road surface may not be displayed on the screen.

NOTE:

- *The image of the 360 view camera may be a little different from the actual color.*
- *If a moving object is displayed on the screen, its accidental image may be displayed as well.*
- *Under the following situations, it may be difficult for the driver to see the image of the 360 view camera. However, it is not malfunction.*
  - At night, on a rainy day or at a dark place
  - When the area around a camera is hot or cold under the blazing sun or the cold condition, or when humidity is high on a rainy day (A camera lens may be fogged)
  - When strong light directly streams to a camera (White vertical lines may be displayed on the image)
  - Under the lights such as the fluorescent light (The image on the screen may flicker)
  - When the outside air temperature is low (The screen may get dark)
  - When you park your vehicle for a long time with the engine on (Noise may be displayed on the image)
  - When a camera lens is dirty or when snow or waterdrop is attached to a camera lens

Change of setting

You can adjust the image quality or change the setting of the 360 view camera and the front and rear traffic alert.

⚠ WARNING

If you do not change the setting in a safe place where there is nothing around your vehicle, an accident may occur.
Change the setting in a safe place where there is nothing around your vehicle.

NOTICE

If you change the setting for a long time with the engine off, the lead-acid battery may run out.
Change the setting with the engine on.

Adjusting the image quality

When you adjust the image quality, perform the following procedure:

1) Set the parking brake firmly.
2) Press the engine switch to change the ignition mode to ON.

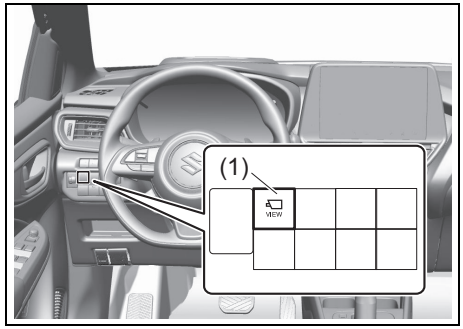

74U050099

3) After the opening image is finished, press a camera switch (1)

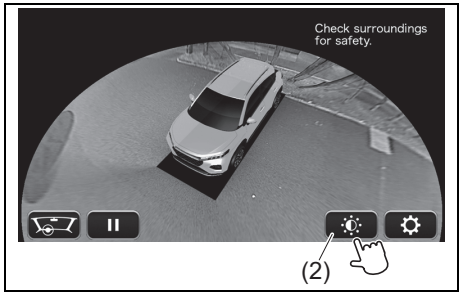

74U050124

4) 3D view mode image will be displayed. Press the button (2) for adjusting the image quality.
5) Adjust brightness and contrast of the image to your preference.

NOTE:
- *The figure of the set brightness varies depending on ON/OFF condition of the light.*
- *Refer to the owner's manual of infotainment system for details.*

Setting of the 360 view camera and the front and rear traffic alert

When you change the setting, perform the following procedure:
1) Set the parking brake firmly.
2) Press the engine switch to change the ignition mode to ON.

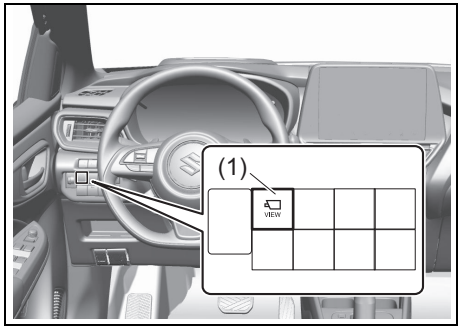

74U050099

3) After the opening image is finished, press a camera switch (1).

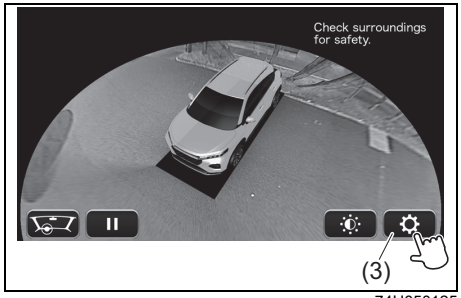

74U050125

4) 3D view mode image will be displayed. Press the button (3) for the setting.

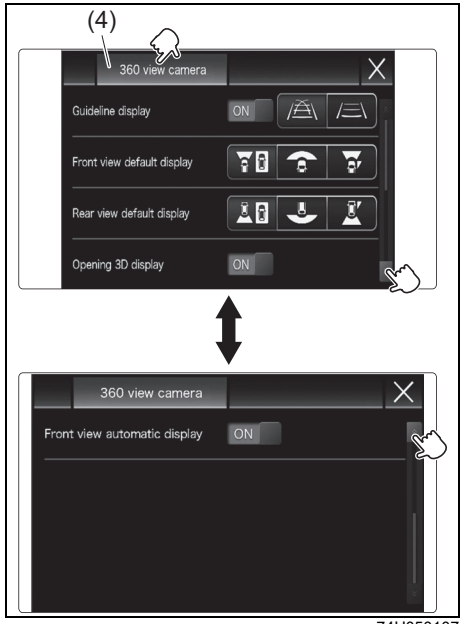

74U050107

5) Touch the indication (4) to perform the setting of the 360 view camera. Change the setting to your preference. To switch to the different page, press ⩛ or ⩚.

• The image in the above figure is a typical example; it depends on the vehicle type.

Indication	Function
 74TB05015	You can select one of the following guide lines: • Hiding guide lines • Displaying rudder-interlocked guide lines • Displaying fixed guide lines
 74U050109	As the image to check the forward area of your vehicle, you can select one of the following images: • Top image and forward image (default setting) • Forward wide image • Side image and forward image
 74U050110	As the image to check the backward area of your vehicle, you can select one of the following images: • Top image and backward image (default setting) • Backward wide image • Side image and backward image
 74U050111	You can select to display or hide 3D view mode which is automatically displayed on activation.
 74U050112	When you shift the gearshift lever from “R” to the other position than “P”, you can select to display or hide the camera image which is automatically displayed.

Handling a camera

⚠ CAUTION

When you strike a camera or its periphery, the image may not be displayed properly. Ask an authorized SUZUKI dealer or a qualified workshop to have the camera inspected.

NOTE:
- *When you replace a camera with new one, adjustment is necessary. Ask an authorized SUZUKI dealer or a qualified workshop for adjustment.*
- *Do not attach any object which prevents the camera's activation to the camera and its periphery. You cannot attach the backlit license plate.*

When you doubt malfunction of camera

When the error mark of camera system is displayed on the screen

When the error mark ⚠ is displayed on the screen, there is abnormality in the camera system.
- If the error mark does not disappear, ask an authorized SUZUKI dealer or a qualified workshop to have the camera system inspected.

When the image quality on the 360 view camera is poor
- When a camera lens is dirty, you may have difficulty to see the image. If waterdrop, snow or dirt is attached to the camera lens, wash it with water and wipe it off with a soft cloth. If the camera lens is heavily dirty or wax is attached to the camera lens, use a mild detergent.
- When reflected light from strong sun or strong headlights from the vehicle behind your vehicle streams directly to a camera, white lines may be displayed on the image and you may have difficulty to see the image. However, this is not malfunction.

When the image and the guide lines are misaligned

In the following case, the image and the guide lines will be misaligned. However, this is not malfunction.
- Your vehicle is tilted due to the number of passengers and baggage.

License Information

The software in the 360 view camera includes open software. The license information is as follows:

[T-Kernel]

This Product uses the Source Code of T-Kernel under T-License granted by the T-Engine Forum (www.tron.org).

[OpenGL ES]

SGI FREE SOFTWARE LICENSE B (Version 2.0, Sept. 18, 2008)

Copyright (C) [dates of first publication] Silicon Graphics, Inc. All Rights Reserved. Permission is hereby granted, free of charge, to any person obtaining a copy of this software and associated documentation files (the “Software”), to deal in the Software without restriction, including without limitation the rights to use, copy, modify, merge, publish, distribute, sublicense, and/or sell copies of the Software, and to permit persons to whom the Software is furnished to do so, subject to the following conditions:

The above copyright notice including the dates of first publication and either this permission notice or a reference to http://oss.sgi.com/projects/FreeB/ shall be included in all copies or substantial portions of the Software.

THE SOFTWARE IS PROVIDED "AS IS", WITHOUT WARRANTY OF ANY KIND, EXPRESS OR IMPLIED, INCLUDING BUT NOT LIMITED TO THE WARRANTIES OF MERCHANTABILITY, FITNESS FOR A PARTICULAR PURPOSE AND NONINFRINGEMENT. IN NO EVENT SHALL SILICON GRAPHICS, INC. BE LIABLE FOR ANY CLAIM, DAMAGES OR OTHER LIABILITY, WHETHER IN AN ACTION OF CONTRACT, TORT OR OTHERWISE, ARISING FROM, OUT OF OR IN CONNECTION WITH THE SOFTWARE OR THE USE OR OTHER DEALINGS IN THE SOFTWARE.

Except as contained in this notice, the name of Silicon Graphics, Inc. shall not be used in advertising or otherwise to promote the sale, use or other dealings in this Software without prior written authorization from Silicon Graphics, Inc.

Head-up Display (Vehicle Without SUZUKI SAFETY SUPPORT) (if equipped)

Head-up display (HUD) will show the information such as the current vehicle speed and the gear position in the driver's front vision.

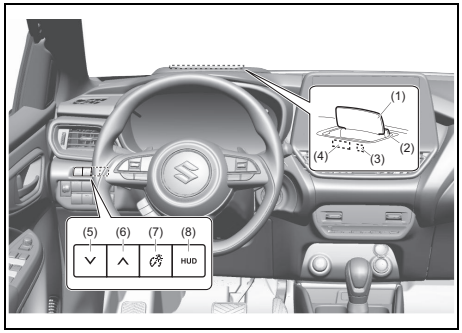

74U050084

(1) Display
(2) Cover
(3) Light-received surface
(4) Mirror
(5) Down switch
(6) Up switch
(7) Brightness control switch
(8) HUD (Head-up display) switch

⚠ WARNING

- **Do not continue to look at the head-up display while driving. Otherwise, you may not find the vehicle, pedestrians or obstacles in front of you. This could result in an accident.**
- **Adjust the display brightness and position to your preference not to obstruct a safe driving. If adjustment is not performed properly, it could result in an accident.**
- **Operate the head-up display while the vehicle is stopped. If you attempt to operate the display while driving, you may not look ahead carefully. This could result in an accident.**

⚠ CAUTION

When the head-up display is moving, do not put your hands closer to it. Your hands may get caught in it and get injured.

NOTICE

- **Performing the following points may prevent the proper operations of the head-up display and result in its malfunction. Observe these points.**
  - **– Do not adjust the display angle by your hands. Do not open or close the cover by your hands.**
  - **– Do not place any object or drink on the cover, its peripheral part and the light-received surface.**
  - **– Do not place stickers, etc. to the display, the inside of the cover and the light-received surface.**
  - **– Do not shine a strong light on the light-received surface.**
- **If you drop any object inside the cover, carefully pick it up not to injure the part such as the mirror.**
- **Ask an authorized SUZUKI dealer or a qualified workshop, if you drop any object inside the place where the head-up display is stored and you cannot pick up the object or the head-up display is stuck inside.**
- **Do not wipe the HUD cover forcefully. When you wipe it off, use a soft cloth.**

NOTE:
- *If you wear your sunglasses, you may have trouble seeing the displayed information. In this case, adjust the brightness or take your sunglasses off.*
- *You may have trouble seeing the displayed information in the following cases.*
  – *On a rainy day or a day with strong sunlight*
  – *When driving on snowy roads or when a wet road is shining after the rain*
  – *When the headlights from your vehicle is reflected to the vehicle in front of you at night*
  – *When the position of the vehicle in front of you and the displayed information get overlapped*
  – *Depending on the driving posture*
- *Under the very cold condition, the vehicle speed on the speedometer and the one on the head-up display may differ a little.*
- *When the head-up display gets hot, such as after parking the vehicle under the blazing sun, the displayed information may temporarily become dark for its protection. When the head-up display gets hotter, the displayed information will temporarily disappear and the message will be shown on the information display of the instrument cluster.*
  – When the temperature becomes low, the above condition will be canceled. However, if the above condition is kept, ask an authorized SUZUKI dealer or a qualified workshop.
  – *You can turn off the message on the information display in high temperature by changing the setting (customization). For details, refer to "Setting Mode" in "INSTRUMENT CLUSTER" section.*

Activation of the head-up display

When you press the engine switch to ON mode and the engine starts, the head-up display will automatically appear and the following information will be displayed as necessary.

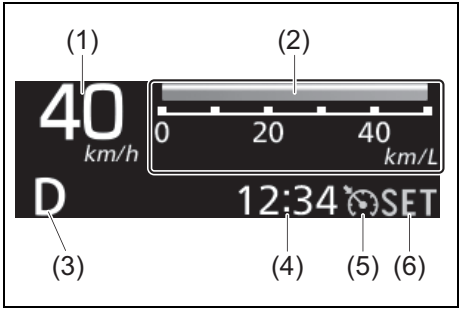

74TBX05057

(1) Vehicle speed
(2) Standard display
(3) Gear position indicator (for Automatic transmission vehicles)
(4) Clock
(5) Cruise indicator
(6) "SET" indicator

When you press the engine switch to ACC or LOCK (OFF) mode, the head-up display will be automatically stored.

NOTE:
- *Even if you stop the engine, the display setting will be stored.*
- *The vehicle speed on the head-up display and the one on the speedometer may differ a little.*
- *You can turn off a part of the information by changing the setting (customization).*

Operation of the head-up display

Operate the head-up display while the vehicle is stopped. You cannot adjust the brightness and the displayed position while driving.

Head-up display operation switch

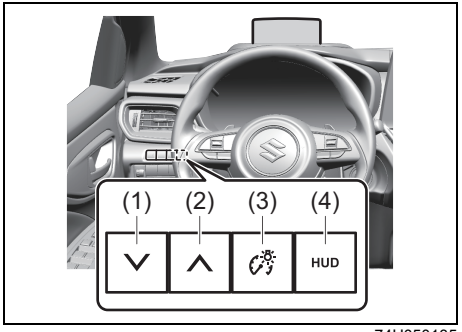

74U050135

(1) Down switch
(2) Up switch
(3) Brightness control switch
(4) HUD (Head-up display) switch

ON / OFF operation of the head-up display

If you press and hold the HUD (Head-up display) switch (4) with the engine on, you can make the head-up display appear or store.

NOTE:
If you store the head-up display inside by operating the HUD (Head-up display) switch and stop the engine, the head-up display will not appear automatically on the next engine start.

ON / OFF operation of the intersection guidance display (When using Android Auto™*1 or Apple CarPlay*2 on infotainment system)

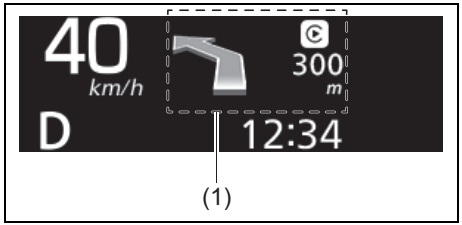

74U050132

(1) The intersection guidance display (The above image is an example of Apple CarPlay.)

NOTE:
- *For ON / OFF operation of the intersection guidance display, you need to change the setting on the information display. For details, refer to "Setting Mode" in "INSTRUMENT CLUSTER" section.*
- *The intersection guidance display on the head-up display and the one on the navigation system may differ a little.*

*1: Android Auto™ may not be available in your country or region. For details about Android Auto™, refer to http://support.google.com/androidauto
*2: Apple CarPlay may not be available in your country or region. For details about Apple CarPlay, refer to https://www.apple.com/ios/carplay/

Brightness control

Brightness of the display will be automatically adjusted depending on the surrounding conditions. You can adjust the brightness to your preference by the following steps.

1) Press the brightness control switch (3).
2) To make the display brighter, press " ∧ " of the up switch (2). To make the display darker, press " ∨ " of the down switch (1).



74TBX05060

NOTE:
- *You can adjust brightness of the display from −10 to +10 (21 levels) by the brightness control switch.*
- *Depending on brightness which was automatically adjusted, you may not be able to make the display brighter or darker.*
- *Regardless of the driver's seat conditions, brightness may be automatically changed in the following conditions.*
  – *When driving in a tunnel or around its gateway*
  – *When driving on a road where there is a structural object over your head*

Adjustment of the displayed position

Press the down switch (1) or up switch (2) to adjust the displayed position of the head-up display.



74TBX05061

NOTE:

- *You can adjust the displayed position of the head-up display from −12 to +12 (25 levels) by the up/down switch.*

Displayed information of the head-up display

Activation / ending of the head-up display

When the engine switch is pressed to change the ignition mode to ON and the engine starts, the head-up display will automatically activate and the following images will be displayed.



74TBX05062

Standard display of the head-up display

Every time you press the HUD (Head-up display) switch, the displayed information will be changed as follows.

- The following images are typical examples; they depends on the vehicle type.

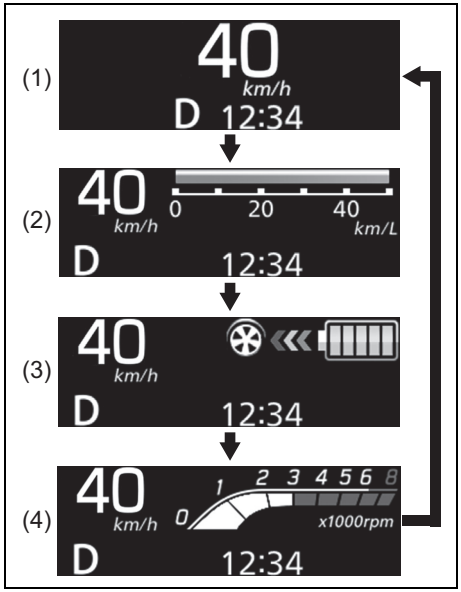

74U050133

(1) Vehicle speed
(2) Instantaneous fuel consumption
(3) Energy flow
(4) Tachometer

NOTE:

- *Even if you stop the engine, the display setting will be stored.*
- *The vehicle speed on the head-up display and the one on the speedometer may differ a little.*

When operating the air conditioner

If you operate the air conditioner with instantaneous fuel consumption, tachometer displayed, the following images will be displayed.



74TBX05064

When you press “AUTO” switch, “AUTO” and the set temperature will be displayed for a certain time.



74TBX05065

When you operate the temperature selector, the set temperature will be displayed for a certain time.



74TBX05066

When you operate the blower speed selector, the blower speed will be displayed for a certain time.

NOTE:
- *When the vehicle speed is displayed in standard display of the head-up display, the air conditioner setting will not be displayed.*
- *You can hide the information of air conditioner by the setting mode on the information display. For details, refer to "Setting Mode" in "INSTRUMENT CLUSTER" section.*

Interrupt display
When there is the information to tell you and you press the engine switch to ON mode, the following interrupt display will appear. Depending on the type of the display, a buzzer may sound at the same time.
- The following images are typical examples; they depends on the vehicle type.

Display	Buzzer	Description
 55T050810	Chime (Once) (Only when one of the doors is not completely closed)	When one of doors or the bonnet is not completely closed, the interrupt display will appear. If you are driving your vehicle, stop the vehicle in a safe place and close completely.
 55T050820	Beeps at short intervals	When the parking brake is not released while driving, the interrupt display will appear. Stop the vehicle in a safe place and release the parking brake.
 55T050830	Chime (Once)	When the fuel level is low, the interrupt display will appear. Refill the fuel tank as soon as possible.

Display	Buzzer	Description
 55T050840	Beeps at long intervals	The driver does not wear his/her seat belt. Stop the vehicle in a safe place and wear your seat belt. The passenger does not wear his/her seat belt. Wear the seat belt.
 55T050850	–	When outside temperature nears freezing, this interrupt display will appear.
 55T051030	Off	The intersection guidance is displayed. (When using Android Auto™ or Apple CarPlay on infotainment system) For details, refer to “ON / OFF operation of the intersection guidance display” in this section.

360 View Camera (Vehicle Without SUZUKI SAFETY SUPPORT) (if equipped)

The 360 view camera is the function which shows visual image for the surrounding of your vehicle on the infotainment system screen, using the front camera, the side camera (left and right) and the back camera. This helps the driver improve visibility when the driver tries to park your vehicle, go by an oncoming vehicle in a narrow road or start the vehicle with poor visibility for left and right sides of the vehicle.

- Use the infotainment system which corresponds with the 360 view camera.

Camera positions

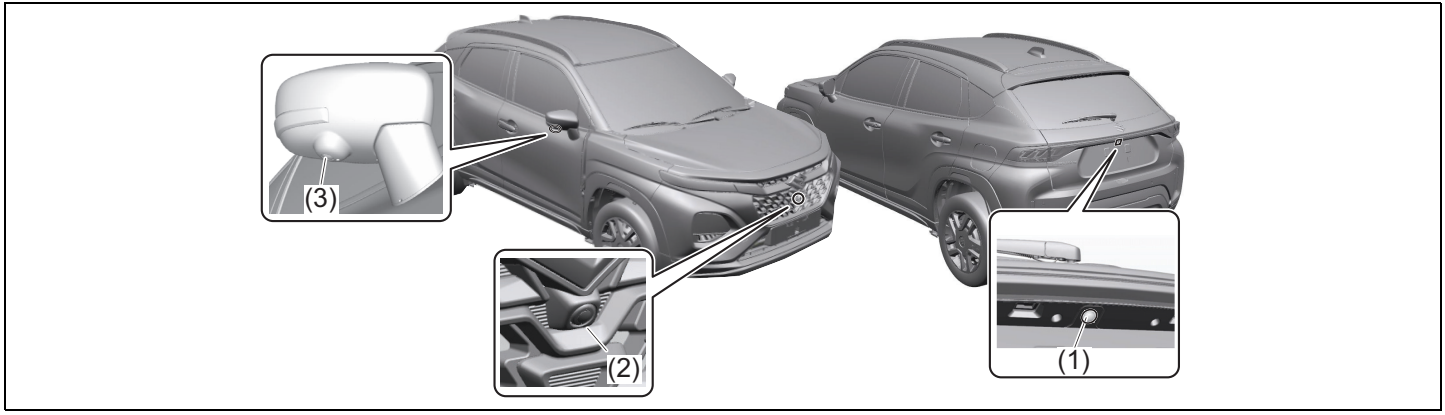

74TBX05067

(1) Back camera
(2) Front camera
(3) Side camera (under left and right outside rearview mirrors)

- Each camera in the above figure is a typical example; the actual equipment depends on the vehicle type.

⚠ WARNING

- **The 360 view camera cannot reduce the driver's duty of care for driving operation. Use the 360 view camera only to provide driving assistance.**
- **The 360 view camera has limits and it may not show a person or an obstacle. Drive your vehicle slowly confirming the safety of the backward and the surrounding conditions by directly checking with your eyes and mirrors. If you drive your vehicle only by checking the 360 view camera, an accident may occur.**
- **The cameras are precision instruments. Do not apply excessive force to the cameras, disassemble them and modify them. Also, do not pour hot water to the cameras and poke them with a stick to remove mud or frozen snow on the cameras. Doing so may damage the cameras and cause a fire and malfunction.**
- **Do not use the 360 view camera, when the outside rearview mirrors are folded and any of front doors and the tailgate is not closed. The image of the surrounding area may not be displayed properly and an accident may occur.**

NOTICE

If you use the 360 view camera for a long period of time with the engine stopped, the lead-acid battery could run out. Do not use the 360 view camera for a long period of time with the engine stopped.

NOTE:

- *Rough indication lines of vehicle width will be displayed more widely, compared with an actual vehicle width. Drive your vehicle by directly checking the safety of the surrounding conditions.*

How to use the 360 view camera

3D view mode function
The 360 view camera will display the image of the surroundings with a view from the outside or the inside of the vehicle.

1) Press the engine switch to change the ignition mode to ON.
2) After the opening image was displayed, 3D view mode will be automatically displayed on the screen.

Pattern 1
(Default setting)

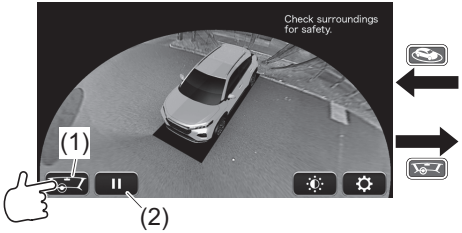

The 360 view camera will display the image of the surroundings with a view from the outside of the vehicle.

Pattern 2

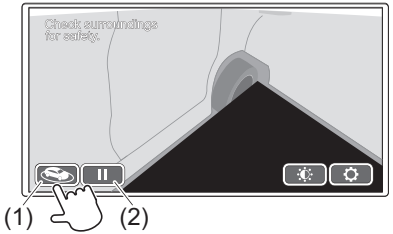

The 360 view camera will display the image of the surroundings with a view from the inside of the vehicle.

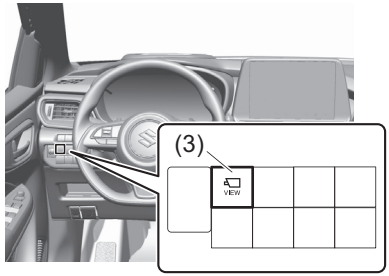

74U050098

3) For switching the current image to the image with a different view, touch the image switching button (1) on the screen. For temporarily stopping the rotation of 3D view mode, touch the temporary stop or replay button (2). For restarting the rotation of 3D view mode, touch the button (2) again.

NOTE:

- *For Automatic transmission vehicle, if you press the camera switch (3) when the gearshift lever is in "P" position, you can display 3D view mode.*
- *You can change the display screen of 3D view mode by changing the setting.*
- *When you press the camera switch while the opening image is displayed, 3D view mode will end. If you display 3D view mode, follow the procedure below.*
  3D view mode → Press the camera switch → Change the mode of display → Press the camera switch → End of 3D view mode
- *When the engine switch is in ACC mode, 3D view mode will not be displayed on the screen.*

Displaying the forward of the vehicle

1) Press the engine switch to change the ignition mode to ON.
2) Automatic transmission vehicle:
   Shift the gearshift lever into a position other than “P” or “R”.
3) Press the camera switch (1). “Top image and forward image” (default setting) will be displayed.

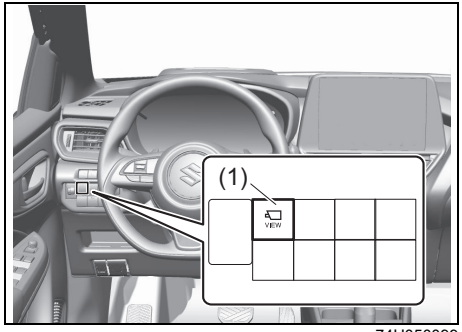

74U050099

4) Every time you touch the image switching button (2), the image will be changed as follows:

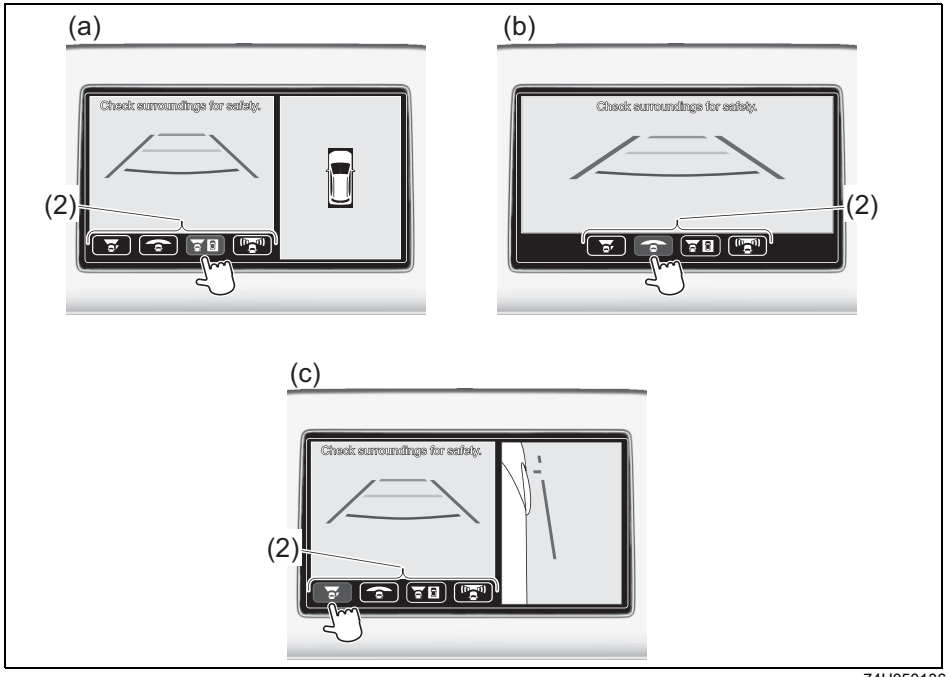

74U050136

(a)Top image and forward image (Default setting)
The 360 view camera will display the surrounding image and the forward image.

(b)Forward wide image
The 360 view camera will display the forward image widely.

(c)Side image and forward image
The 360 view camera will display the image under the front passenger's seat and the forward image.

- When you press the camera switch, the current image will be changed to the previous image.
- Even when you do not press the camera switch, the current image will be changed to the previous image by the following methods:
  – When 3 minutes passed after you press the camera switch
  – When you operate the infotainment system
  – When the vehicle speed becomes over about 10 km/h *(6 mph)*
- When the vehicle speed becomes over about 10 km/h *(6 mph)* and you press the camera switch, you can display the side image on the screen. When the vehicle speed becomes about 10 km/h *(6 mph)* or less, the forward image will be displayed on the screen.

NOTE:
- *For automatic transmission vehicle, for adjusting the image quality and setting up the initial display image, shift the gearshift lever into "P".*
- *When the engine switch is in ACC mode, the camera image will not be displayed.*

Displaying the backward of the vehicle

1) Press the engine switch to change the ignition mode to ON.
2) Shift the gearshift lever into “R” (Reverse). “Top image and backward image” (default setting) will be automatically displayed.
3) Every time you touch the image switching button (1), the image will be changed as follows:

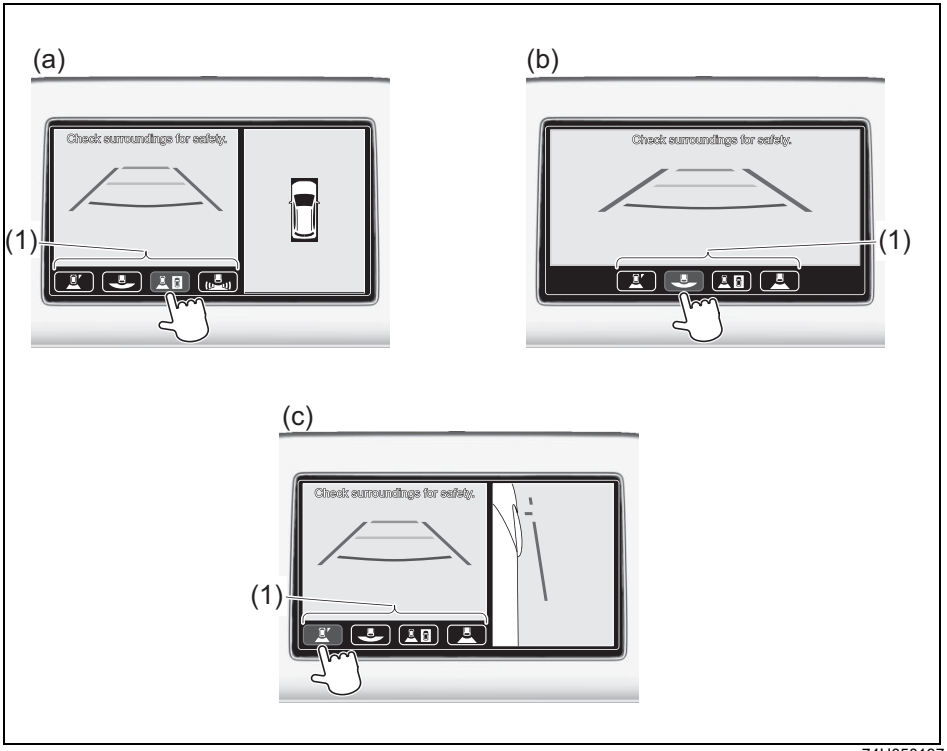

74U050137

(a)Top image and backward image (Default setting)

The 360 view camera will display the surrounding image and the backward image.

(b)Backward wide image

The 360 view camera will display the backward image widely.

(c)Side image and backward image

The 360 view camera will display the image under the front passenger's seat and the backward image.

When you shift the gearshift lever other than “R”, the camera image will return to the previous one.

NOTE:

- *The backward image of the 360 view camera is displayed as the top priority out of all the images. However, when the infotainment system itself is being activated, the backward image will not displayed.*
- *For automatic transmission vehicle, for adjusting the image quality and setting up the initial display image, shift the gearshift lever into "P".*
- *When the engine switch is in ACC mode, the camera image will not be displayed.*

Error display on the screen
When there is an abnormality in the camera system, the following mark will be displayed on the screen.
Consult an authorized SUZUKI dealer or a qualified workshop to have the camera system inspected.

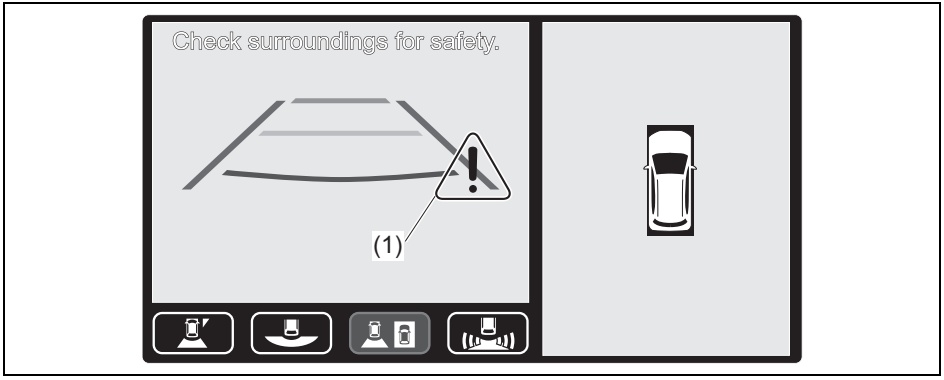

74U050138

(1) Error mark of camera system

Front and rear traffic alert

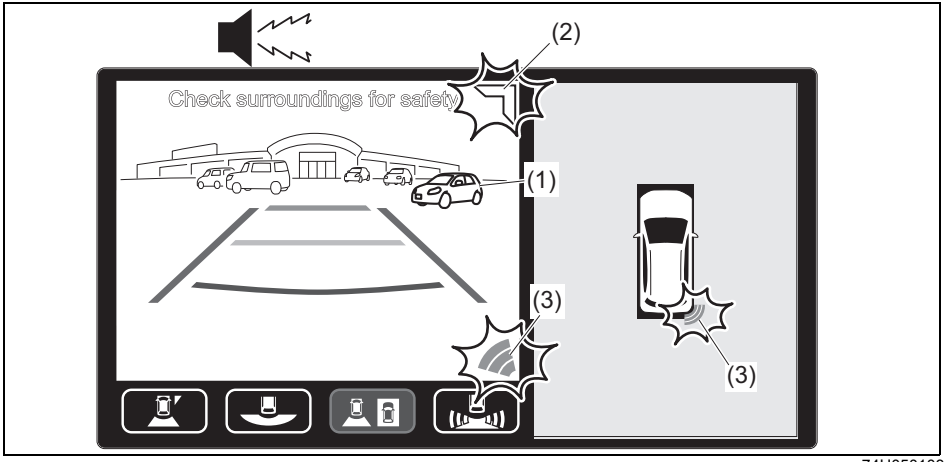

74U050103

(1) Detected vehicle

While you park the vehicle in a parking lot or drive the vehicle at a very low speed, if a person or a vehicle moves from the outside to the center in the detection area of the 360 view camera, the buzzer of detection (the default setting is in OFF state) from the speaker will sound and the support indicator (2) for checking left and right directions will come on. This function informs the driver of necessity to confirm safety and evasive action such as depressing the brake pedal.
When you reverse the vehicle, the information (3) which is detected by the rear parking sensors will be displayed as well as the interior buzzer of detection sounds and the support indicator (2) for checking left and right directions comes on.

⚠ WARNING

The front and rear traffic alert cannot detect all the moving objects. Directly check safety of the surroundings with your eyes.

NOTE:
You can change the setting of the front and rear traffic alert.

Examples which the front and rear traffic alert does not activate

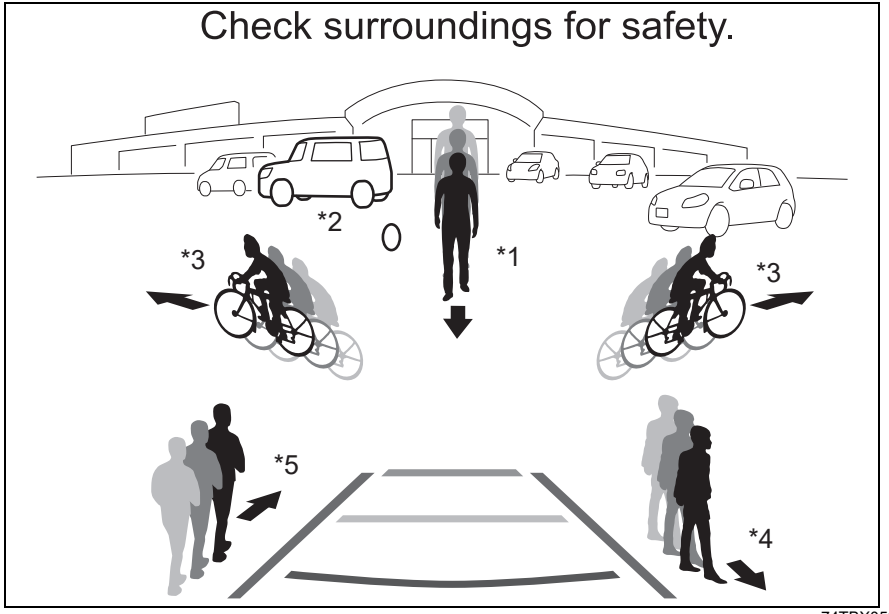

74TBX05074

Situations where the front and rear traffic alert does not activate

- When a person or a vehicle approaches from front or straight behind of your vehicle *1
- When a person or a vehicle does not move *2
- When a person or a vehicle move from the center to the outside on the screen *3
- When you do not park the vehicle in a parking lot or you do not drive the vehicle at a very low speed
- When there is a long distance between a person or a vehicle to your vehicle
- When a moving object is not displayed on the screen
- When the detected target object overlap with strong light of sunshine and headlights
- When there is a big difference of camera image between a bright place and a dark place on the screen

Situations where the front and rear traffic alert may not activate

- When a person or a vehicle approaches parallel to your vehicle *4

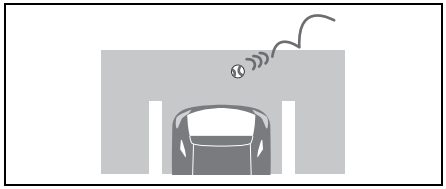

74TBX05075

- When a small object such as a ball is moving
- When a moving object such as a bicycle gets across at a high speed
- When a camera lens is dirty by spider's web or mud
- When a camera lens is misted

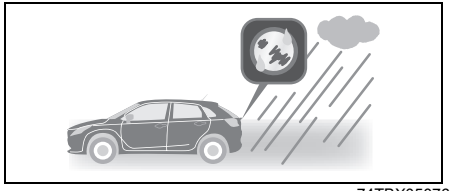

74TBX05076

- When visibility is poor due to snow, rain or fog
- When a camera lens is directly exposed to light from the sun or headlights

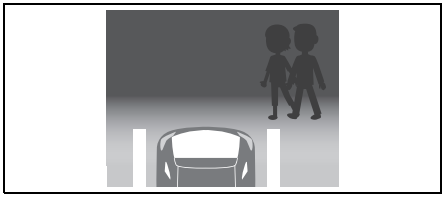

74TBX05077

- When it is difficult to detect a person or a vehicle which gets across at night, because there is no street lamp
- When the body color of a vehicle or the cloths of a person that gets across is similar to the background

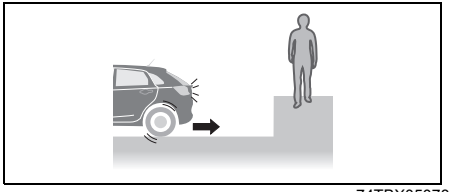

74TBX05078

- When a person or a vehicle moves at a higher place than the space which you try to park your vehicle
- When a tailgate is opened
- When a strong impact is applied to a camera and its peripheral part and the installed position of the camera is misaligned
- When the detection area is misaligned by inclination on the road

Situations where the front and rear traffic alert may activate by chance

- When a person or a vehicle steps away parallel from your vehicle *5
- When a labarum outside of a convenience store or a street tree swings in the wind
- When there is a wall or a shutter which has running wavy pattern, fences, white lines, a metal lid such as a grating cover
- When the lights from signs, the turn signal lights or the reversing lights of a vehicle or your vehicle are flashing nearby
- When waterdrop or white smoke runs on a camera lens
- When the road is wet and shiny or there are puddles after the rain
- When the brightness is changed by shadow of trees or buildings
- When your vehicle is severely inclined
- When a strong impact is applied to a camera and its peripheral part and the installed position of the camera is misaligned
- When the detection area is misaligned by inclination on the road

How to understand the displayed items on the screen
The following guide lines and buttons will be displayed on the screen.
The guide lines would provide a rough indication for your driving operations.

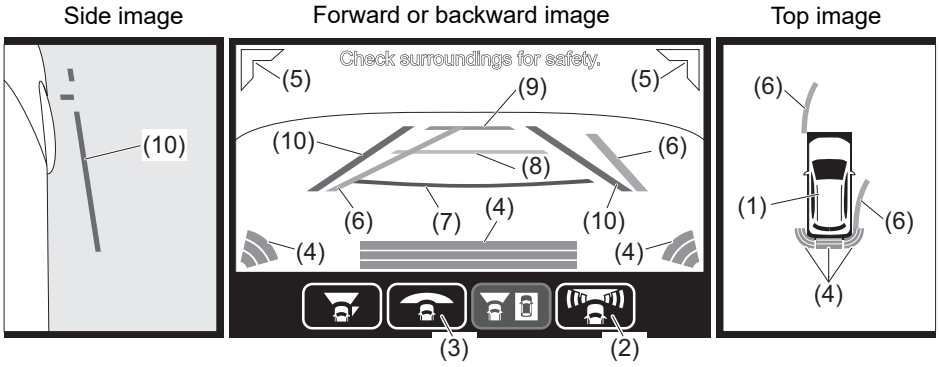

74U050140

- Each displayed item in the above figure is a typical example; it depends on the vehicle type.

No.	Displayed item	Contents
(1)		This shows the position of your vehicle.

<table>
<tr><th>No.</th><th>Displayed item</th><th colspan="2">Contents</th></tr>
<tr><td rowspan="6">(2)</td><td></td><td>This shows that the forward of your vehicle is displayed and the front and rear traffic alert is activated.</td><td rowspan="4">By touching the button, you can change ON/ OFF of front and rear traffic alert.</td></tr>
<tr><td></td><td>This shows that the backward of your vehicle is displayed and the front and rear traffic alert is activated.</td></tr>
<tr><td></td><td rowspan="2">This shows that the front and rear traffic alert is not activated.</td></tr>
<tr><td></td></tr>
<tr><td></td><td colspan="2" rowspan="2">This shows that you increases the vehicle speed and the front and rear traffic alert is not activated.</td></tr>
<tr><td></td></tr>
</table>

No.	Displayed item	Contents
(2)		This shows that there is abnormality in the front and rear traffic alert. Consult an authorized SUZUKI dealer or a qualified workshop to have the function inspected.
		
(3)		This shows that the top image and forward image are displayed.
		This shows that the top image and backward image are displayed.
		This shows that the forward wide image is displayed.
		This shows that the backward wide image is displayed.

No.	Displayed item	Contents
(3)		This shows that the side image and forward image are displayed.
		This shows that the side image and backward image are displayed.

No.	Displayed color	Item name	Contents
(4)	Green or yellow or red	Indication detected from the rear parking sensors	When the rear parking sensors detects a wall or an obstacle is reversing, this icon is displayed.
(5)	Yellow	Indication of the support for checking left and right directions	When a person or a vehicle moves from the outside to the center in the detection area of a camera, this icon is displayed.
(6)	Green	Guide line for the course	In conjunction with your operations of the steering wheel, this shows the guide line of predicted course when your vehicle moves forward or backward. *

No.	Displayed color	Item name	Contents
(7)	Red	Guide line for the distance	This shows the guide line of the position where is about 0.5 m (1.6 ft) forward or backward from the center of bumper front-end or bumper back-end
(8)	Yellow		This shows the guide line of the position where is about 1 m (3.3 ft) forward or backward from the center of bumper front-end or bumper back-end.
(9)	Light blue		This shows the guide line of the position where is about 2 m (6.6 ft) forward or backward from the center of bumper front-end or bumper back-end.

*: When the steering wheel is in straight position, the top image and the guide line for the course of forward/backward movement will not be displayed.

(10)	Purple	Guide line for the vehicle width (vertical line)	This shows the guide line of the position where is slightly outside of the vehicle width (including the width of outside rearview mirrors).
		Guide line for the vehicle width (horizontal line)	This shows the guide line of the position where is the most front-end of the vehicle.

- As each guide line is displayed towards road surface, the distance from your vehicle to an obstacle such as the parked vehicle near your vehicle is not accurately displayed. Also, as the top image is displayed by processing the image based on a flat road surface, the position of an obstacle (such as the bumper of the other vehicle) where is higher than the road surface is not accurately displayed.
- Trapezoidal guide lines for the distance and the vehicle width which are displayed on the screen are rough indications and they depend on the actual distance and vehicle width.
- If you modify suspensions or replace a tyre by the undesignated tyre, the guide lines and the top image will not be accurately displayed.
- The buttons on the screen are displayed by pressing.

⚠ CAUTION

- **The top image is the quasi-image which combines and processes several images from the cameras on the outside rear-view mirrors, the forward of your vehicle and the backward of your vehicle. Therefore, the top image may be displayed as follows:**
  - **– A steric object is displayed as if it is fell down.**
  - **– If the position of a steric object is higher than the road surface, the object is displayed farther away or it is invisible.**
  - **– A steric object is not displayed out of the screen or its position is misaligned.**
- **A steric object on the forward image or the backward image may not be displayed on the top image.**
- **On the top image, the lines on the road may be misaligned on the frame of screen or these lines may look bended. The farther distance from your vehicle there is, the much misalignment the lines have.**
- **When the position of a camera is misaligned, the images or the guide lines may be misaligned. Ask an authorized SUZUKI dealer or a qualified workshop to have the camera inspected.**
- **On a snowy road or a slippery road surface, the guide line for the course and the actual course may be different.**
- **As the icon of vehicle on the top image is displayed by a computer graphics, it is different from color, shape and size of the actual vehicle. Therefore, the position between your vehicle and the road surface or obstacles may be different from the actual position.**
- **On the top image, the brightness of the image from each camera may vary depending on brightness conditions.**
- **After an image is switched to the other image, it may be displayed late. Until the 360 view camera is completely displayed, the image may be temporarily distorted.**
- **The camera of the 360 view camera uses a special lens. Therefore, the displayed distance and the actual distance may look different and the target object may be displayed as a distorted image. The farther distance from your vehicle there is, the much tendency these situations have.**
- **As the wide image displays a large range, it displays a significantly-distorted image. Also, the distance on the wide image looks different from the actual distance.**

NOTE:
When you activate the infotainment system or there is abnormality on the touch panel, you cannot operate the buttons. In this case, wait for a while. Or, press a camera switch to go back to the original displayed screen, press a camera switch again and operate the buttons while the screen is displayed.
If you cannot operate the buttons by performing the above procedure, Consult an authorized SUZUKI dealer or a qualified workshop.

Difference between the camera image and the actual road surface
The position and distance which the guide lines on the screen shows vary depending on the number of passengers, the load capacity, the inclination and situation on the road surface. Directly check safety of the surroundings with your eyes.

When there is an uphill slope on your movement direction
You will see the guide line for the distance in front of the actual distance.

Backward image (Example):

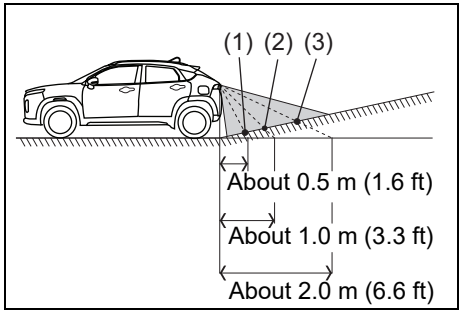

74TBX05080

(1) Red, the point which the guide line for the distance (about 0.5 m [1.6 ft]) shows
(2) Yellow, the point which the guide line for the distance (about 1.0 m [3.3 ft]) shows
(3) Light blue, the point which the guide line for the distance (about 2.0 m [6.6 ft]) shows

When there is an downhill slope on your movement direction
You will see the guide line for the distance in the back of the actual distance.

Backward image (Example):

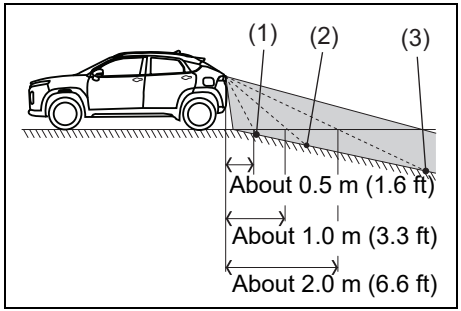

74TBX05081

(1) Red, the point which the guide line for the distance (about 0.5 m [1.6 ft]) shows
(2) Yellow, the point which the guide line for the distance (about 1.0 m [3.3 ft]) shows
(3) Light blue, the point which the guide line for the distance (about 2.0 m [6.6 ft]) shows

When there is an steric object near your vehicle
In this case, the distance from your vehicle to the steric object may be different from the actual distance.

Example 1:

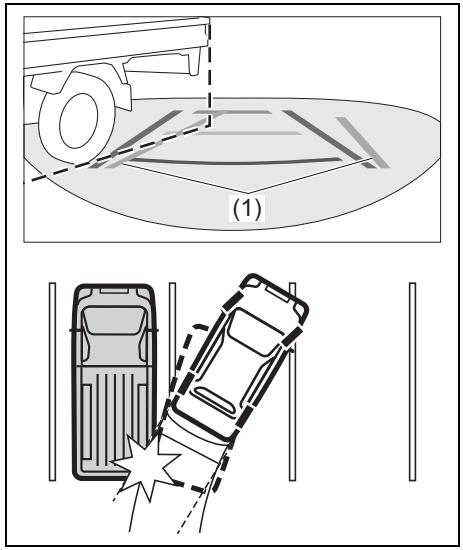

74TBX05082

In the illustration, the guide line for the course (1) does not touch the body of the displayed truck. However, if the body of this truck protrudes on the actual course which your vehicle will go, a collision may occur.

Example 2:

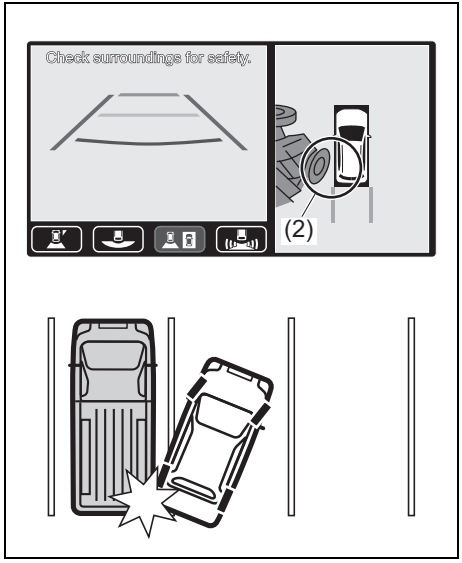

74U050141

In the illustration, the top image (2) shows that there is a little distance between your vehicle and the body of the displayed truck. However, the actual distance is shorter than the displayed distance and a collision may occur.

Displayed areas on the screen

- The areas of next image will be displayed on the screen. However, the areas around and under the front bumper and the rear bumper will not be displayed.
- The areas above a camera will not be displayed. If an obstacle is high or the upper part of an obstacle protrudes, such as a sign, the upper part will not be displayed on the screen.
- A feeling of distance on the image of the 360 view camera is different from the actual distance.
- If there is an obstacle such as an parked vehicle on the areas which are displayed on the screen, it may be displayed different from the actual distance.
- The backward image may be inverted on the screen, which is the same as you look the image on the inside rearview mirror or the outside rearview mirrors.
- As the front camera and the back camera are installed on the places which are a little misaligned from the center of your vehicle, the forward image and the backward image will be displayed with a little misaligned positions.

The image of view area by the 360 view camera

⚠ CAUTION

The specified areas will become blind spots which will not be displayed on the screen. Make sure to directly check the safety with your eyes.

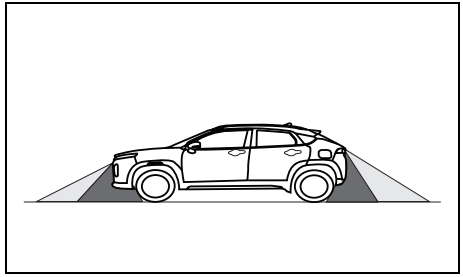

74TBX05084

- The areas under the front bumper and the rear bumper or the ground surface which is indicated in the below illustration may not be displayed on the screen.

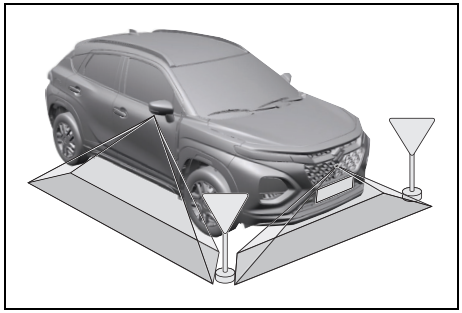

74U050142

- On the top image, an object near the edge of areas which a camera displays and an object which is higher than the road surface may not be displayed on the screen.

NOTE:

- *The image of the 360 view camera may be a little different from the actual color.*
- *If a moving object is displayed on the screen, its accidental image may be displayed as well.*
- *Under the following situations, it may be difficult for the driver to see the image of the 360 view camera. However, it is not malfunction.*
  - At night, on a rainy day or at a dark place
  - When the area around a camera is hot or cold under the blazing sun or the cold condition, or when humidity is high on a rainy day (A camera lens may be fogged)
  - When strong light directly streams to a camera (White vertical lines may be displayed on the image)
  - Under the lights such as the fluorescent light (The image on the screen may flicker)
  - When the outside air temperature is low (The screen may get dark)
  - When you park your vehicle for a long time with the engine on (Noise may be displayed on the image)
  - When a camera lens is dirty or when snow or waterdrop is attached to a camera lens

Change of setting

You can adjust the image quality or change the setting of the 360 view camera and the front and rear traffic alert.

⚠ WARNING

If you do not change the setting in a safe place where there is nothing around your vehicle, an accident may occur.
Change the setting in a safe place where there is nothing around your vehicle.

NOTICE

If you change the setting for a long time with the engine off, the lead-acid battery may run out.
Change the setting with the engine on.

Adjusting the image quality

When you adjust the image quality, perform the following procedure:

1) Set the parking brake firmly.
2) Press the engine switch to change the ignition mode to ON.

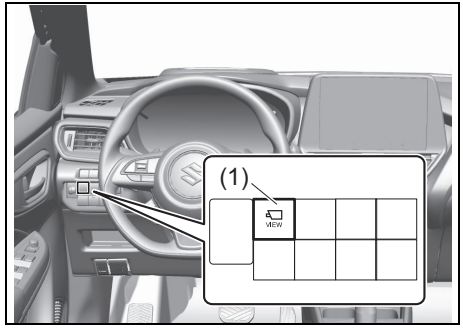

74U050099

3) After the opening image is finished, press a camera switch (2)

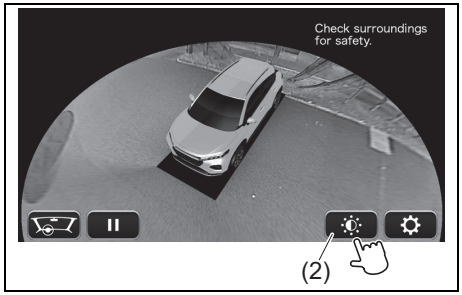

74U050124

4) 3D view mode image will be displayed. Press the button (2) for adjusting the image quality.
5) Adjust brightness and contrast of the image to your preference.

NOTE:
- *The figure of the set brightness varies depending on ON/OFF condition of the light.*
- *Refer to the owner's manual of infotainment system for details.*

Setting of the 360 view camera and the front and rear traffic alert

When you change the setting, perform the following procedure:
1) Set the parking brake firmly.
2) Press the engine switch to change the ignition mode to ON.

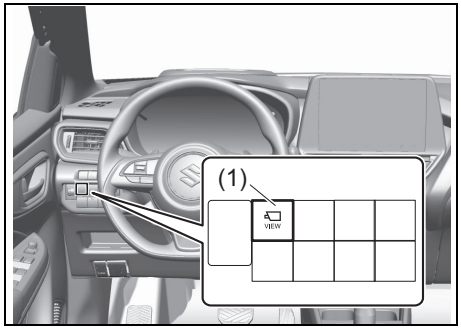

74U050099

3) After the opening image is finished, press a camera switch (1).

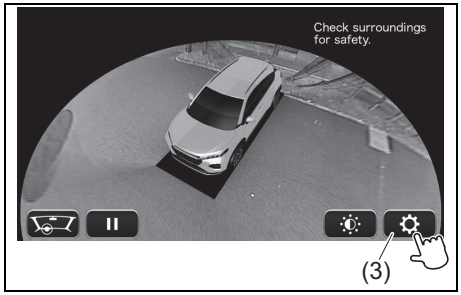

74U050125

4) 3D view mode image will be displayed. Press the button (3) for the setting.

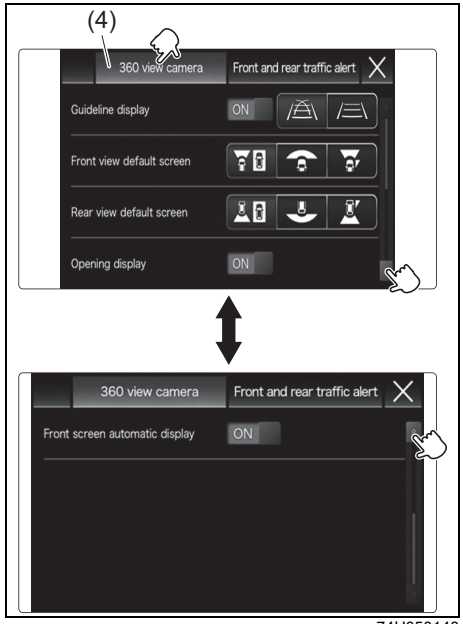

74U050143

5) Touch the indication (4) to perform the setting of the 360 view camera. Change the setting to your preference. To switch to the different page, press ⌄⌄ or ⌃⌃.

• The image in the above figure is a typical example; it depends on the vehicle type.

Indication	Function
 74TB05015	You can select one of the following guide lines: • Hiding guide lines • Displaying rudder-interlocked guide lines • Displaying fixed guide lines
 74TB05016	As the image to check the forward area of your vehicle, you can select one of the following images: • Top image and forward image (default setting) • Forward wide image • Side image and forward image
 74TB05018	As the image to check the backward area of your vehicle, you can select one of the following images: • Top image and backward image (default setting) • Backward wide image • Side image and backward image
 74TB05020	You can select to display or hide 3D view mode which is automatically displayed on activation.
 74TB05019	When you shift the gearshift lever from “R” to the other position than “P”, you can select to display or hide the camera image which is automatically displayed.

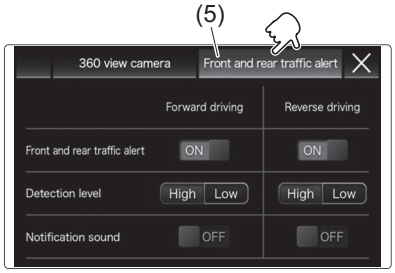

74U050144

6) Touch the indication (5) to perform the setting of the front and rear traffic alert. Change the setting to your preference.
• The image in the above figure is a typical example; it depends on the vehicle type.

Indication	Function	
Front and rear traffic alert 59RN05550	You can select ON/OFF condition of the front and rear traffic alert.	
Detection level 59RN05560	You can select one of the following detecting levels.	
	High: Normal level	Low: Low level
Notification sound 59RN05570	You can select ON/OFF condition of sound (buzzer) for the above-mentioned function. (The default setting is in OFF state.)	

Handling a camera

⚠ CAUTION

When you strike a camera or its periphery, the image may not be displayed properly. Ask an authorized SUZUKI dealer or a qualified workshop to have the camera inspected.

NOTE:
- *When you replace a camera with new one, adjustment is necessary. Ask an authorized SUZUKI dealer or a qualified workshop for adjustment.*
- *Do not attach any object which prevents the camera's activation to the camera and its periphery. You cannot attach the backlit license plate.*

When you doubt malfunction of camera

When the error mark of camera system is displayed on the screen

When the error mark ⚠ is displayed on the screen, there is abnormality in the camera system.
- If the error mark does not disappear, ask an authorized SUZUKI dealer or a qualified workshop to have the camera system inspected.

When the image quality on the 360 view camera is poor
- When a camera lens is dirty, you may have difficulty to see the image. If waterdrop, snow or dirt is attached to the camera lens, wash it with water and wipe it off with a soft cloth. If the camera lens is heavily dirty or wax is attached to the camera lens, use a mild detergent.
- When reflected light from strong sun or strong headlights from the vehicle behind your vehicle streams directly to a camera, white lines may be displayed on the image and you may have difficulty to see the image. However, this is not malfunction.

When the image and the guide lines are misaligned

In the following case, the image and the guide lines will be misaligned. However, this is not malfunction.
- Your vehicle is tilted due to the number of passengers and baggage.

License Information

The software in the 360 view camera includes open software. The license information is as follows:

[T-Kernel]

This Product uses the Source Code of T-Kernel under T-License granted by the T-Engine Forum (www.tron.org).

[OpenGL ES]

SGI FREE SOFTWARE LICENSE B (Version 2.0, Sept. 18, 2008)

Copyright (C) [dates of first publication] Silicon Graphics, Inc. All Rights Reserved. Permission is hereby granted, free of charge, to any person obtaining a copy of this software and associated documentation files (the “Software”), to deal in the Software without restriction, including without limitation the rights to use, copy, modify, merge, publish, distribute, sublicense, and/or sell copies of the Software, and to permit persons to whom the Software is furnished to do so, subject to the following conditions:

The above copyright notice including the dates of first publication and either this permission notice or a reference to http://oss.sgi.com/projects/FreeB/ shall be included in all copies or substantial portions of the Software.

THE SOFTWARE IS PROVIDED "AS IS", WITHOUT WARRANTY OF ANY KIND, EXPRESS OR IMPLIED, INCLUDING BUT NOT LIMITED TO THE WARRANTIES OF MERCHANTABILITY, FITNESS FOR A PARTICULAR PURPOSE AND NONINFRINGEMENT. IN NO EVENT SHALL SILICON GRAPHICS, INC. BE LIABLE FOR ANY CLAIM, DAMAGES OR OTHER LIABILITY, WHETHER IN AN ACTION OF CONTRACT, TORT OR OTHERWISE, ARISING FROM, OUT OF OR IN CONNECTION WITH THE SOFTWARE OR THE USE OR OTHER DEALINGS IN THE SOFTWARE.

Except as contained in this notice, the name of Silicon Graphics, Inc. shall not be used in advertising or otherwise to promote the sale, use or other dealings in this Software without prior written authorization from Silicon Graphics, Inc.

79R40530

Parking Sensors (Vehicle Without SUZUKI SAFETY SUPPORT)

Instrument cluster (Type A)

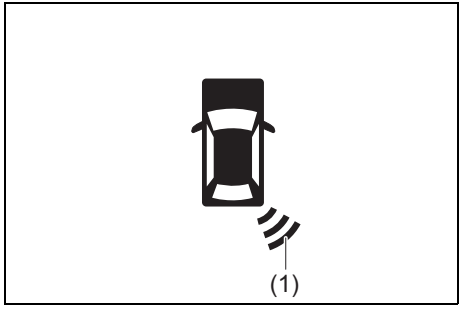

74TBX05093

Instrument cluster (Type B without DSBS II)

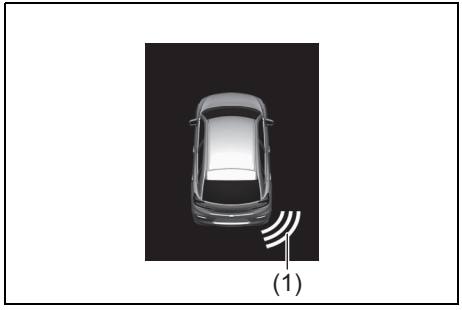

74TBX05094

(1) Symbol representing an obstacle detected by parking sensor*

* This symbol shows that an obstacle is located on the right rear of vehicle.

- The parking sensor system uses ultrasonic sensors to detect obstacles near the rear bumper. If obstacles are sensed while you are parking or moving the vehicle slowly, the system warns you by sounding a buzzer and displaying symbols representing the obstacles on the information display in the instrument cluster.
- The system emits an ultrasonic wave and the relevant sensor detects the return of the wave reflected by an obstacle. The system measures the time taken by the ultrasonic wave to reach the obstacle and return from it, from which it determines the obstacle's position.
- The parking sensor function can be used when you turn the ignition switch to "ON" position or the engine switch is pressed to change the ignition mode to "ON", the gearshift lever is in the "R" position. This function is helpful in the following cases: pulling over to the curb; parallel-parking the vehicle; steering the vehicle into a garage; driving along an alley; and moving slowly in a place with obstacles.

⚠ WARNING

- **The parking sensor warns you of obstacles with buzzers and by showing you the location of the obstacles on the information display. However, you must still pay full attention yourself while driving.**
- **The sensors can detect obstacles only within a limited area and only when the vehicle is moving within a limited speed range. So, in tricky areas, you must move the vehicle slowly while checking around it using your direct vision or rearview mirrors. There is increased risk of an accident if you control the vehicle relying only on the parking sensor.**

NOTICE

Parking sensors are only for driver's assistance.

NOTE:
When the gearshift lever is shifted to the "R" position, a buzzer will sound once.

Sensor Locations

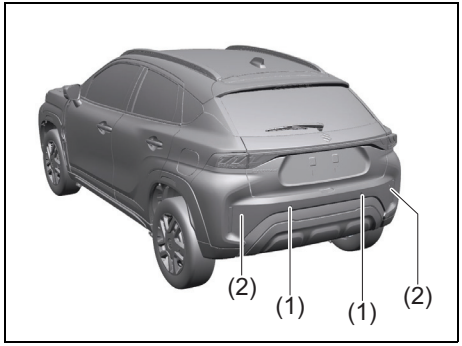

74TBX05095

(1) Rear center sensors (2 places)
(2) Rear corner sensors (2 places)

NOTICE

- **Avoid hitting the sensor areas or directing the nozzle of a high-pressure car washer onto the sensor areas. Otherwise, the sensors may be damaged.**
- **If the bumper hits a hard object, the sensors on it may not work properly. If this occurs, have the sensors inspected by an authorized SUZUKI dealer or a qualified workshop.**

Working sensors

The sensors work depending on the gearshift lever position as follows:

Gearshift lever position		Automatic transmission		Parking brake lever
		R	N, D, 2 or L	
Rear sensors	Center	On	Off	No relation
	Corner	On	Off	No relation

Approximate areas where obstacles can be detected

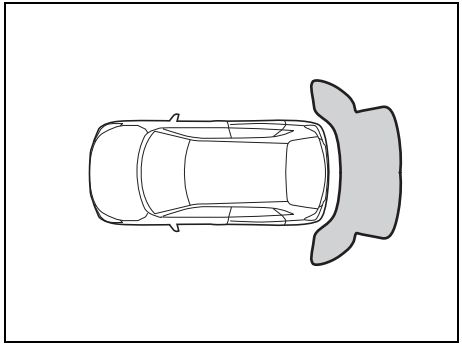

74TBX05096

- An obstacle within about 20 cm (8 in) from a sensor or just below a sensor is not detectable.
- The sensors can detect obstacles such as a wall up to about 1.5 m (5 ft) from the rear of vehicle.

⚠ WARNING

- **Under the following conditions, the parking sensor system may not work normally because the sensors cannot detect obstacles correctly.**
  – Sensors are covered with mud, ice or other materials (Such materials must be removed for normal operation).

(Continued)

⚠ WARNING

(Continued)
- **Sensors are wet from water splashes or heavy rain.**
- **Sensors are covered by a hand, sticker, accessory, etc.**
- **There is an accessory or other object attached within the sensor's sensing area.**
- **Items such as tow hooks, commercially available corner poles, radio antenna, etc. are installed on the bumper.**
- **The height of the bumper is changed due to alteration to the suspension or other causes.**
- **The sensor areas are extremely hot from direct sunlight or cold due to freezing weather.**
- **The vehicle is on a rough surface, slope, gravel road or grass field.**
- **The vehicle is at a steep angle.**
- **Sensors have intercepted ultrasonic noise from another vehicle's horn, engine, air braking system (large vehicles), or parking sensor.**

(Continued)

⚠ WARNING

(Continued)
- **Obstacles are too close to the sensors.**
- **Sensors are at an angle to a highly reflective object such as glass (Ultrasonic waves are not reflected back from the obstacle).**

- **Sensors may not be able to correctly detect the following types of obstacles:**
  - **Objects made of a thin material like wire netting and ropes.**
  - **Square-shaped curbstones or other objects with sharp edges.**
  - **Tall objects with a large upper part like a road sign.**
  - **Low-profile objects such as curbstones.**
  - **Sound-absorbing objects such as cotton and snow.**

NOTE:
- *Thin poles or obstacles lower than the sensors may become undetectable as the vehicle moves closer to them even if they have been detected from longer distances.*
- *The system may calculate the distance to a road sign or similar obstacle to be shorter than the actual distance.*

How to Use Parking Sensor

Parking sensor OFF switch

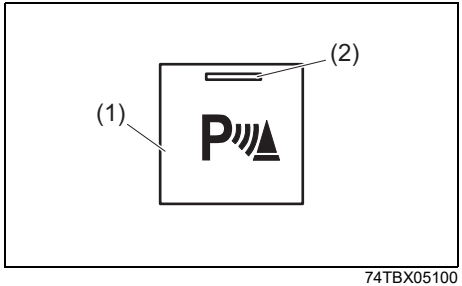

74TBX05100

(1) Parking sensor OFF switch
(2) Indicator

- When the ignition mode is ON and the indicator light in the parking sensor OFF switch is on, indicating that the parking sensor is ready for operation under the following condition:
  – The gearshift lever is in the “R” position.
- To deactivate the parking sensor, push the parking sensor OFF switch and check that the indicator light goes off.

Switch position	State
	ON • When the indicator light is on and all necessary conditions are met, system becomes ready for operation.
	OFF • The system does not operate. Push the switch to turn off the indicator if you do not wish to use the parking sensor.

NOTE:
If you push the parking sensor OFF switch from OFF to ON position when the ignition mode has been changed to ON by pressing the engine switch, the interior buzzer sounds.

Obstacle Indication by Parking Sensor

Instrument cluster (Type A)

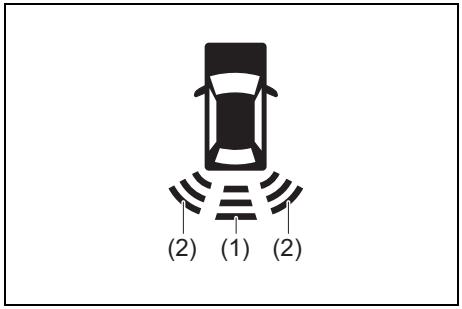

74TBX05097

Instrument cluster (Type B without DSBS II)

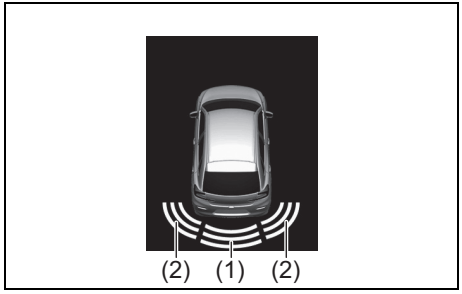

74TBX05098

(1) Obstacle detected by rear center sensors

(2) Obstacle detected by rear corner sensors

Upon detecting an obstacle, the parking sensor causes an interior buzzer to sound and a symbol representing the obstacle appears on the information display in the instrument cluster.

- A different symbol is displayed depending on the direction and distance of the obstacle.
- A buzzer located behind the rear seat sounds when a sensor at the rear detects an obstacle.
- Warnings when obstacles are detected by rear sensors

Distance (approx.)		Buzzer	Symbol
Center sensors	60–150 cm (24–59 in)	Short beeps at long intervals	Three lines
45–60 cm (18–24 in)		Short beeps at short intervals	
35–45 cm (14–18 in)		Short beeps at very short intervals	Two lines
Less than 35 cm (14 in)		Continuous beep	One line

NOTE:

- *Symbols are displayed with a short delay after the detection of obstacles.*
- *If the system detects multiple obstacles simultaneously, the display shows all of their positions using the corresponding symbols. However, the buzzers will sound only for the nearest obstacles.*

Warning and Indicator Messages

Vehicle with Instrument Cluster (Type A)

If there is a problem or warning regarding the parking sensor system, a buzzer and the status of the indicator on the parking sensor inform it. Follow its instruction.

- The buzzer sounds intermittently. The indicated sensor is contaminated. Wipe it clean with a soft cloth. If the buzzer does not stop after wiping, there may be problem with the parking sensor system. Have your vehicle inspected by an authorized SUZUKI dealer or a qualified workshop.

Vehicle with Instrument Cluster (Type B without DSBS II)

If there is a problem or warning regarding the parking sensor system, a message is displayed on the information display in the instrument cluster, and a symbol blinks and the buzzer sounds. If a message is displayed, follow its instruction.

Message	Symbol	Probable cause and remedy
	Two blinking lines in a sensor location	There may be a problem with the parking sensor system. Have your vehicle inspected by an authorized SUZUKI dealer or a qualified workshop.
	One blinking line in a sensor location	The indicated sensor is contaminated. Wipe it clean with a soft cloth.

Rearview Camera (if equipped)

When the gearshift lever is shifted to “R” position while the ignition switch is in “ON” position or the ignition mode is “ON”, the rearview camera system automatically shows the view behind the vehicle on the display.

⚠ WARNING

The distance viewed in the rearview camera may differ from the actual distance according to the condition of road or the load the vehicle is carrying. Since the camera display area is also limited, backing up by only looking at the display may cause an accident or a crash with an object.
The rearview camera cannot replace the driver’s attention. The driver alone is responsible for parking and similar driving maneuvers.
- **Use the rearview camera only to provide driving assistance.**
- **Always drive carefully confirming the safety of the rear and the surrounding conditions by looking directly with your eyes and using the rear view mirror.**
- **Check that the trunk lid is securely closed when backing up.**

NOTICE

If you use the rearview camera for a long time when the ignition switch is in “ON” position or the ignition mode is ON, but the engine is not running, the battery may discharge.
Do not leave the ignition switch in “ON” position or the ignition mode to ON for a long time when the engine is not running.

Rearview Camera Location

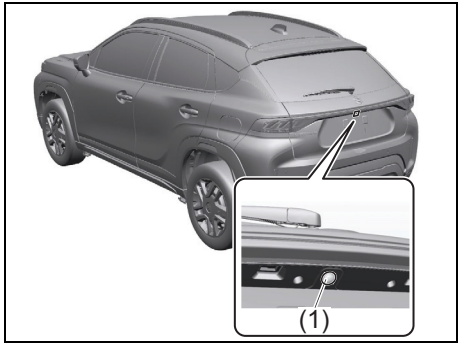

74TBX05099

(1) Rearview camera

The rearview camera is installed on the tailgate.

NOTICE

The rearview camera is a precision instrument. If you strike the camera, it may be broken and cause damage resulting in a catch fire or a malfunction.
- **Do not strike the camera.**
- **Do not remove snow or mud on the camera lens with a stick.**

NOTICE

If water enters the rearview camera, it may cause a malfunction or catch fire.
Do not use high pressure water around the camera.

NOTICE

This lens is hard coated to prevent damage or discoloration. Damage or discoloration of lens may obscure the image.
- **Do not use a brush to clean lens.**
- **Do not use alcohol, benzine or thinner to clean the lens.**
- **Do not use wax on the camera lens.**

NOTE:
If body wax gets on the camera lens, wipe off the wax with a clean cloth dampened with mild detergent diluted with water, and then wipe the lens with a dry cloth.

How to use rearview camera

1) Turn the ignition switch to “ON” position or press the engine switch to change the ignition mode to “ON”.
2) Shift the gearshift lever in “R” position.
   • The display automatically shows the view behind the vehicle.
   • When the gearshift lever is shifted from “R” to another gearshift lever position, the display returns to the previous display.

NOTE:
The rearview camera display has first priority in any display mode. However, the rearview camera display does not show the rear view while the system is initializing.

Display Range of Rearview Camera

The rearview camera display shows the area behind the rear end of the bumper. The display cannot show objects which are close to the bumper or under the bumper. The rearview camera display cannot show obstacles which are higher than the camera. Upper parts of tall objects such as road signs cannot be viewed on the display.

Display range of rearview camera

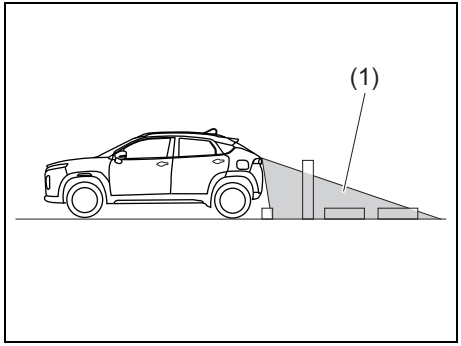

74TBX050100

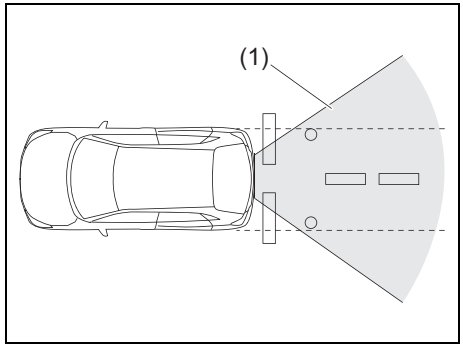

74TBX050101

(1) Display range

NOTE:
- *Images shown on the display from the rearview camera are reversed images (mirror images).*
- *The colors of objects on the rearview camera may differ from the actual object colors.*
- *The rearview camera display may be difficult to see under the following conditions, but this is not a system malfunction.*
  - *In dark areas, on a rainy day or at night.*
  - *When the temperature around the lens is too high/low, or the camera is wet such as on a rainy day or during periods of high humidity (dew condensation may occur on the camera lens).*
  - *When a foreign object such as mud or a drop of water is stuck around the camera lens.*
  - *When strong light directly enters the camera (vertical lines may be seen on the display).*
  - *Under fluorescent light (The display may flicker).*
  - *When the outside temperature is low (the image on the display may be darkened).*

Rearview camera screen indication

The distance viewed in the rearview camera may differ from the actual distance according to the condition of the road or the load the vehicle is carrying.

Uphill incline behind the vehicle

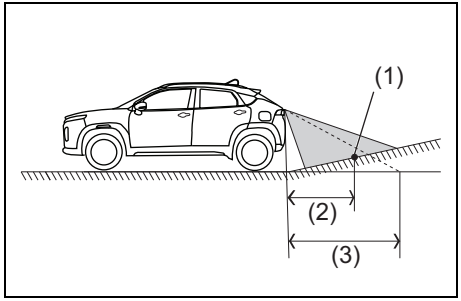

74TBX050102

(1) Object
(2) Actual distance
(3) Distance on the display

When there is an uphill incline behind the vehicle, the object shown on the display appears farther away than the actual distance.

Downhill incline behind the vehicle

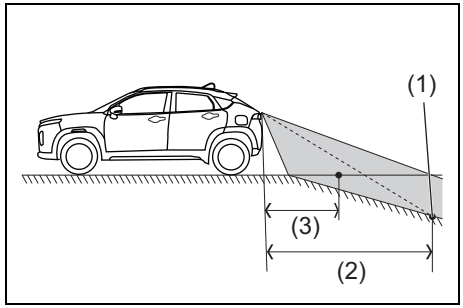

74TBX050103

(1) Object
(2) Actual distance
(3) Distance on the display

When there is a downhill incline behind the vehicle, the object shown on the display appears closer than the actual distance.

If the rear view from the rearview camera is not shown or there is a poor image

- If the rear view from the rearview camera is not shown.
  - Check that the ignition switch is in "ON" position or the ignition mode is "ON".
  - Check that the gearshift lever is shifted to "R" position.

- If the image from the rearview camera is poor.
  - Check that the camera lens is not dirty.
  - Check that light from the sun or the beam of the headlights from the vehicle behind is not shining directly into the lens.

If the rearview camera system is still not working properly after checking the above, have the system inspected by an authorized SUZUKI dealer or a qualified workshop as soon as possible.

Electronic Stability Program (ESP®)

ESP® is a registered trademark of Mercedes-Benz Group AG.

The Electronic Stability Program (ESP®) helps to control the vehicle during cornering if front wheels or rear wheels skid. It also assists you in maintaining traction while accelerating on loose or slippery road surfaces. It does this by regulating the engine's output, and by selectively applying the brakes. In addition, ESP® helps to avoid skidding by controlling braking pressure.

⚠ WARNING

The ESP® cannot enhance the vehicle's driving stability in all situations and does not control your vehicle's entire braking system. The ESP® cannot prevent accidents, including those resulting from excessive speed in turns, or hydroplaning. Only safe and attentive drive can prevent accidents.
The capabilities of an ESP®-equipped vehicle must never be used as a substitute for careful driving.

The ESP® has the following systems:

Anti-lock Brake System (ABS)

Refer to "Anti-lock Brake System (ABS)" in this section.

Brake Assist System

Refer to "Brake Assist System" in this section.

Traction Control System

The traction control system automatically helps prevent the spinning of wheels when the vehicle is started or accelerated on slippery road surfaces. The system operates only if it senses that some of the wheels are spinning or beginning to lose traction. When this happens, the system operates the front or rear brakes and reduces engine power to limit wheel spin.

Stability Control System

The vehicle stability control system helps provide integrated control of systems such as anti-lock brakes, traction control, engine control, etc. This system automatically controls the brakes and engine to help prevent the vehicle from skidding when cornering on a slippery road surface or when turning the steering wheel abruptly.

⚠ WARNING

Always check the surrounding conditions and drive the vehicle in a safe manner, as controlling the vehicle by ESP® has limits and ESP® may not function properly depending on the surrounding conditions.

⚠ CAUTION

- **Observe the following points. Otherwise, ESP® may not operate properly or it may result in a malfunction.**
  - **– Adjust the tyre pressure as specified.**
  - **– When replacing tyres, use the same tyres with the size, type, and tread patterns.**
  - **– Do not use the tyres which have excessively worn conditions.**
  - **– Do not modify the suspension or the brake and do not change vehicle height or suspension hardness.**
  - **– Do not drive the vehicle with suspension or brake excessively deteriorated.**
  - **– Do not modify the engine or the muffler.**
  - **– Do not install LSD (limited slip differential).**
- **When you install the snow chains, ESP® may not operate properly.**

NOTE:

- *If you perform the following operations, you may hear an operation sound or a clicking sound. This means that the ESP® system is in the self-check mode and this does not indicate a malfunction.*
  - *– When ignition switch is turned to the "ON" position or pressing the engine switch to change the ignition mode to "ON"*
  - *– When releasing your foot from the brake pedal, after the ignition switch is in "ON" position or the ignition mode is "ON" with the brake pedal depressed*
  - *– When starting the engine*
  - *– When starting the vehicle after starting the engine*
- *When engine revolutions is high and ESP® operates, you may feel the change of engine revolutions or vibration of vehicle body. However, this is normal.*

ESP® Indicator Light

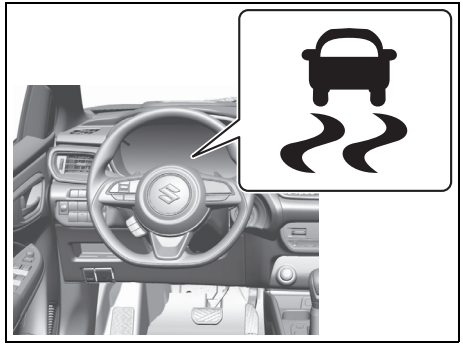

74U050072

This light blinks 5 times per second when one of the following systems is activated.

- Stability control system
- Traction control system

If this light blinks, drive carefully.

When the ignition switch is turned to "ON" position or the engine switch is pressed to change the ignition mode to ON, this light comes on briefly so you can check that the light is working.

NOTICE

If the ESP® indicator light comes on and stays on while driving, there may be a malfunction of the ESP® systems (other than ABS). You should have the systems inspected by an authorized SUZUKI dealer or a qualified workshop.

NOTE:
When the ESP® indicator light comes on and stays on while driving, indicating a malfunction of the ESP® systems (other than ABS), the brake system will function as an ordinary ABS with no additional ESP® functions.

ESP® OFF switch

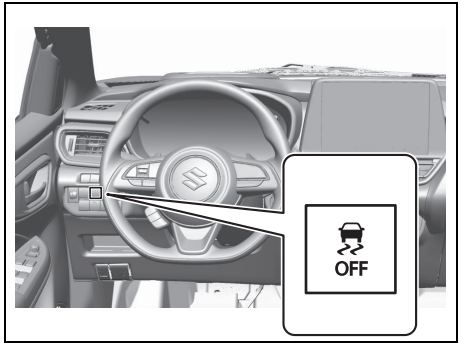

74U050073

When the ESP® OFF switch located at the instrument panel is pushed and held to turn off the ESP® systems (other than ABS), the ESP® OFF indicator light in the instrument cluster comes on.
When you have turned the ESP® systems (other than ABS) off, turn them back on before resuming ordinary driving.
When you push the ESP® OFF switch again, the ESP® OFF indicator light will go out and all of the ESP® systems will be activated.



69T040260

"SERVICE
ESP SYSTEM"

If the message shown in the above illustration appears on the information display, there may be a problem with the ESP® system. Have your vehicle inspected by an authorized SUZUKI dealer or a qualified workshop.

NOTE:
- *The ESP® system will not activate while this message is displayed.*
- *If your vehicle is equipped with the Dual Sensor Brake Support II (DSBS II) system, when the ESP® system is turned off, Dual Sensor Brake Support II (DSBS II) system, lane departure warning, lane departure prevention, lane keep assist and vehicle swaying warning will be turned off. (High beam assist (if equipped) and lane departure prevention do not turn off.)*

ESP® OFF Indicator Light

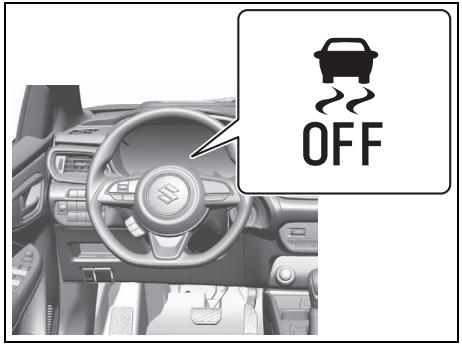

74U050074

- If you press and hold the ESP® OFF switch with the ignition switch is in “ON” position or the ignition mode is “ON”, this light will come on.
  – While this light comes on, traction control system and stability control system will not work.
- If the system is in normal condition, when you turn the ignition switch to “ON” position or press the engine switch to change the ignition mode to ON, this light will come on for about 2 seconds and then come off.

Hill hold control system

The hill hold control system is designed to assist you in starting to move up hills. When you start to move up a hill, the system helps to prevent the vehicle from rolling downward (for approximately 2 seconds) while you move your foot from the brake pedal to the accelerator pedal.

⚠ WARNING

- **Do not rely excessively on the hill hold control system. The hill hold control system may not prevent the vehicle from rolling downward on a hill under all load or road conditions. Always be prepared to depress the brake pedal to prevent the vehicle from rolling downward. Failure to pay attention and depress the brake pedal to hold the vehicle on a hill when necessary, may result in loss of control or an accident.**
- **The hill hold control system is not designed to stop the vehicle on a hill.**

(Continued)

⚠ WARNING

(Continued)

- **After you release your foot from the brake pedal, accelerate the vehicle to move up immediately. If you release your foot from the brake pedal over 2 seconds, the hill hold control system will be canceled. If so, the vehicle may roll downward, which can result in an accident depending on the degree of slope. And, the engine may stall and the power assist for the steering and brakes will not work so steering and braking will be much harder than usual which can result in an accident or vehicle damage.**
- **If you drive on the steep slope, the gravel, the snow-covered road, or the muddy road and the hill hold control system is activated, there may be a possibility that the wheels will be locked and then the vehicle may lose the control.**

The hill hold control system activates for a maximum of about 2 seconds if your foot is moved from the brake pedal when the following conditions are all met.

1) The gearshift lever is in a forward gear or reverse gear.
2) The parking brake is released.
3) The vehicle is on an upward incline.

On model equipped with the ENG A-STOP system, the hill hold control system is activated when the engine is restarted after being stopped automatically, even if the previous conditions are not met.

NOTE:
When the hill hold control system is activated, the following conditions may be found, but this is not a malfunction.
- You may hear a sound from the engine room.
- As brake pedal becomes heavy, it may be difficult for you to depress it.

Instrument Cluster (Type A)

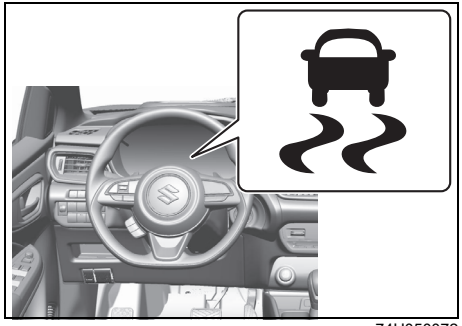

74U050072

If there is a problem with the hill hold control system, the ESP® warning light in the instrument cluster may come on and the hill hold control system may not work. In this case, consult an authorized SUZUKI dealer or a qualified workshop.

Instrument Cluster (Type B)



69T040260

"HILL HOLD DISABLE"

If the message shown in the above illustration appears on the information display, there may be a problem with the hill hold control system. Have your vehicle inspected by an authorized SUZUKI dealer or a qualified workshop.

NOTE:
The hill hold control system will not activate while this message is displayed.

Braking

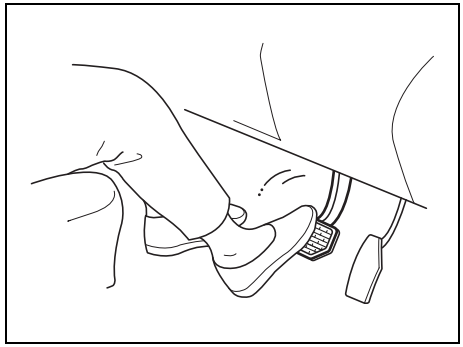

74TBX050107

The distance needed to bring any vehicle to a halt increases with the speed of the vehicle. The braking distance needed, for example, at 60 km/h *(37 mph)* will be approximately 4 times greater than the braking distance needed at 30 km/h *(19 mph)*. Start to depress the brake pedal when there is plenty of distance between your vehicle and the stopping point, and slow down gradually.

⚠ WARNING

If water gets into the brake devices, brake performance may become poor and unpredictable. After driving through water or washing the underside of the vehicle, test the brakes while driving at a slow speed to see if they have maintained their normal effectiveness. If the brakes are less effective than normal, dry them by repeatedly applying the brakes while driving slowly until the brakes have regained their normal effectiveness.

NOTE:
While braking you may hear operational noise due to friction between brake disc/drum and brake lining. This is a normal phenomenon and does not indicate any abnormality or affect normal functioning of the vehicle.

Power-assisted Brakes

Your vehicle has power-assisted brakes. If power assistance is lost due to a stalled engine or other failures, the system is still fully operational on reserve power and you can bring the vehicle to a complete stop by pressing the brake pedal once and holding it down. The reserve power is partly used up when you depress the brake pedal and reduces each time the pedal is pressed. Apply smooth and even pressure to the pedal. Do not pump the pedal.

⚠ WARNING

Even without reserve power in the brake system, you can still stop the vehicle by pressing the brake pedal harder than normally required. However, the stopping distance may be longer.

Brake Assist System

When you slam the brakes on, the brake assist system determines it to be an emergency stop and provides more powerful braking for a driver who cannot hold down the brake pedal firmly.

NOTE:
If you quickly and forcefully depress the brakes, you may hear clicking sound by the brake assist system operation. This is normal and indicates that the brake assist system is activated properly.

Anti-lock Brake System (ABS)

ABS will help you avoid skidding by electronically controlling braking pressure. It will also help you maintain steering control when braking on slippery surfaces or when braking hard.
The ABS works automatically, so you do not need any special braking technique. Just push the brake pedal down without pumping. The ABS will operate whenever it senses that the wheels are locking up. You may feel the brake pedal move a little while the ABS is operating.

⚠ WARNING

- **Always check the surrounding conditions and drive the vehicle in a safe manner, as controlling the vehicle by ABS has limits and the system may not function properly depending on the surrounding conditions.**
- **If tyre grip performance is over the limit or hydroplaning occurs, ABS cannot work properly.**

NOTE:
- *If the ABS system is activated, you may hear a clunking noise and/or feel pulsating in the brake pedal. This is normal and indicates that the brake fluid pressure is being controlled properly.*
- *You may hear an operation sound when you start the engine or after the vehicle begins to move. This means that the above systems are in the self-check mode. This sound does not indicate a malfunction.*

Braking Distance

ABS is not designed to shorten the stopping distance.

⚠ WARNING

- **In the following situations, the braking distance required for a vehicle with ABS may be slightly greater than the one required for a vehicle without ABS, resulting in an accident. Drive the vehicle slowly and maintain ample distance between your vehicle and the vehicle in front of you.**
  - **When driving on rough roads such as unpaved or stone-paved roads**
  - **When driving on gravel roads or fresh snow roads**
  - **When driving over bumps on the roads such as joint seams**
  - **When passing over metal plates such as manholes**
  - **When snow chains are installed**

NOTE:
- *When applying sudden brake or applying brake on slippery roads, the braking distance required for a vehicle with ABS is almost the same as the one required for a vehicle without ABS.*
- *If you would like to suddenly apply brake, just push the brake pedal down firmly without pumping. Otherwise, the longer braking distance will be required.*
- *The ABS will not work if vehicle speed is under about 9 km/h (6 mph). This depends on the road conditions.*

Vibration and Sound during ABS Operation

When strongly depressing the brake pedal, you might feel vibration of the brake pedal, the steering wheel, and the vehicle body. This is due to ABS operation, and does not indicate a malfunction; continue strongly depressing the brake pedal at this time.

NOTE:
Immediately after starting the engine and beginning to drive, you might temporarily hear a motor sound. This means that the systems are in self-check mode. This sound does not indicate a malfunction.

Tyres

⚠ WARNING

ABS detects each wheel rotation speed via a sensor. If tyres or wheels other than those specified in the owner's manual are used for size, type, tread pattern, or if worn conditions of tyres are different, the correct wheel rotation speed cannot be detected and ABS will not work properly. This may result in an accident.
When replacing tyres, use the tyres with the size, type which are specified in this owner's manual.
Also, do not use the tyres which are excessively worn.

Situations where ABS may Activate by Chance when Applying Brake

- When driving on slippery roads

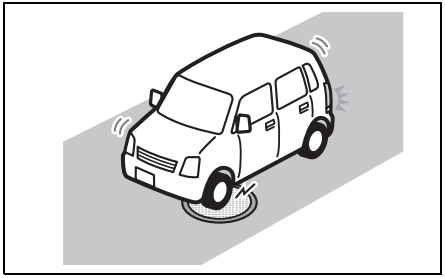

74TBX050108

– Manholes

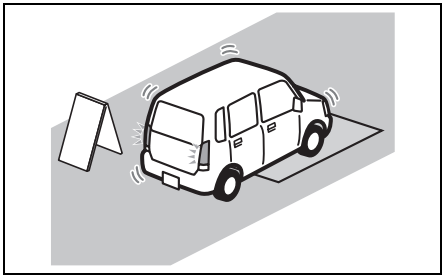

74TBX050109

– Metal plates in construction zones

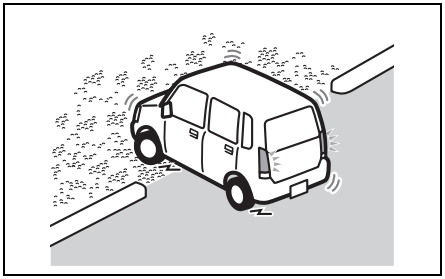

74TBX050110

– Gravel roads

- When driving over joints in roads and other height differences

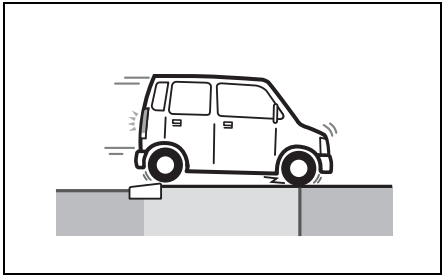

74TBX050111

– Joints in roads

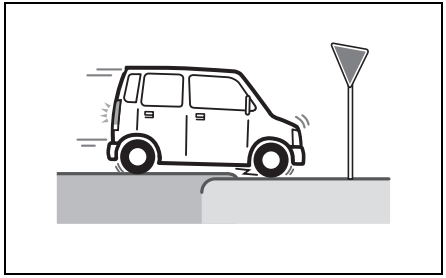

74TBX050112

– Height differences in roads

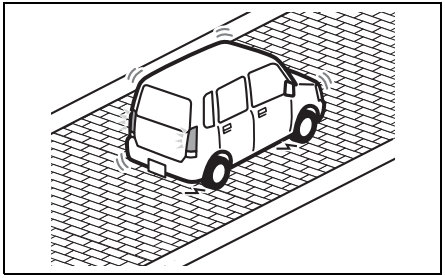

74TBX050114

– Cobblestone

• When driving on rough roads

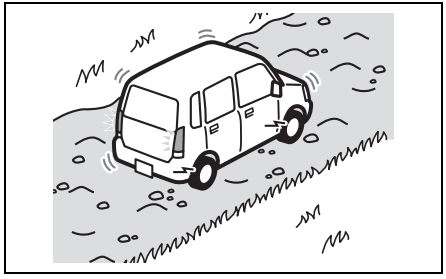

74TBX050113

– Bumpy roads

ABS Warning Light

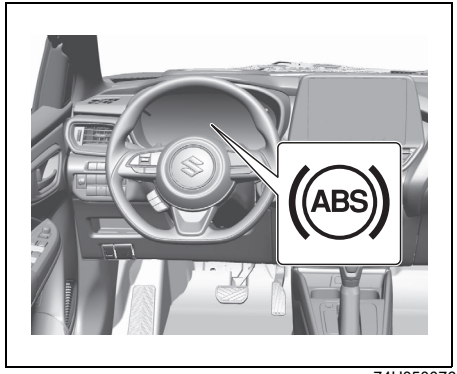

74U050076

If there is a problem in the ABS system with the ignition switch in “ON” position or the engine switch in ON mode, this light will come on.

Braking Assist

This function assists you in applying more force when operating the brake. When sudden braking is applied, the time until the ABS comes into full effect is shortened.

- If you do not depress the brake pedal firmly, braking assist will not operate.
- Brake assist is not a device that provides control beyond the original braking performance.

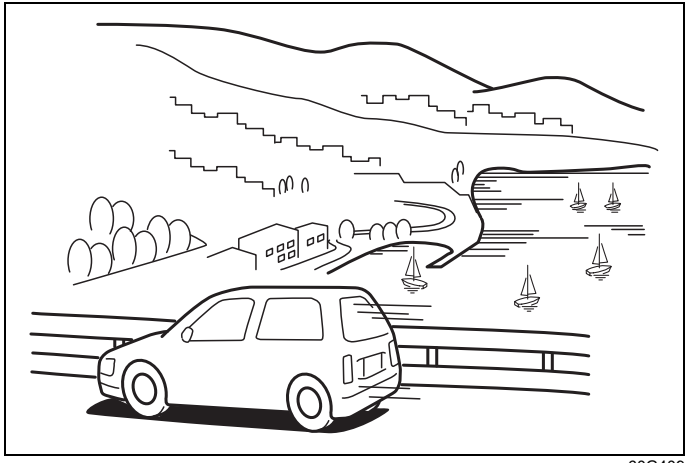

60G409

ADVICE FOR YOUR DRIVING

When Driving 6-1
Off-road Driving 6-8
Improving Fuel Economy 6-8
Stuck Vehicle 6-9
Precaution for Handling Vehicle 6-10
Running-in 6-13
Catalytic Converter 6-13
When Driving Hybrid Vehicle 6-14

When Driving

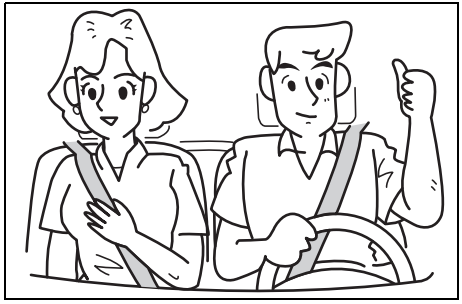

59RN02300

⚠ WARNING

- **Wear your seat belts at all times. Even though airbags are equipped at the front seating positions, the driver and all passengers should be properly restrained at all times, using the seat belts provided. Refer to "Seat Belts and Child Restraint Systems" section for instructions on proper use of the seat belts.**
- **Never drive under the influence of alcohol or other drugs. Alcohol and drugs can seriously impair your ability to drive safely, greatly increasing the risk of injury to yourself and others. You should also avoid driving when you are tired, sick, irritated or under stress.**

Start Driving after Carefully Checking the Surrounding Circumstances

Be sure to always fully check the safety of the surrounding circumstances before beginning to drive.

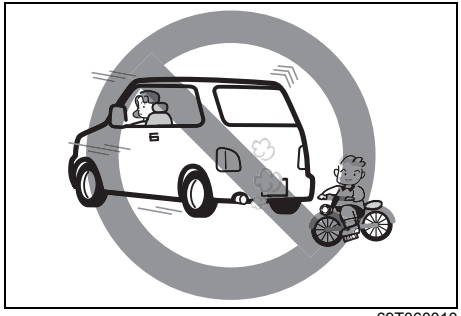

69T060010

⚠ CAUTION

You cannot check the safety of the surrounding circumstances enough only by the 360 view camera, the rear parking sensors and the inside mirror. When moving the vehicle forward or backward, check the safety of the surrounding circumstances by directly checking with your eyes.

Do not race the engine, and avoid fast starts and rapid acceleration just after engine start

Refer to "Avoid Fast Starts, Rapid Acceleration and Hard Braking" and "Do not Race the Engine" in the "Improving Fuel Economy" section.

Do not Concentrate on a Mobile Phone or Navigation System



80T060040

⚠ WARNING

- **Do not operate a mobile phone, etc. while driving. Being distracted by phone operation could lead to an accident.**
- **Do not operate navigation/audio equipment, etc. while driving. Otherwise, there is the danger of an accident due to being distracted.**

Do not Reach Through the Steering Wheel

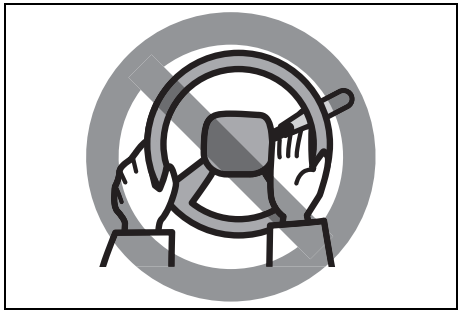

74TBX06004

⚠ WARNING

Reaching through the steering wheel could interfere with steering wheel operation and result in an accident.

Do not Drive with Your Foot on the Brake Pedal

⚠ CAUTION

Driving with your foot resting on the brake pedal could cause brake parts to become worn out more quickly than normal or cause brake components to overheat, making them less effective.

When Depressing the Accelerator Pedal and the Brake Pedal Simultaneously

NOTE:
If you depress both the accelerator pedal and the brake pedal simultaneously while driving, the engine power output may be suppressed.

Do not Shift the Gearshift Lever into "N" (Neutral) while Driving

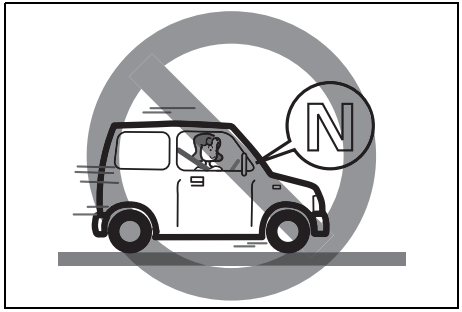

74TBX06005

⚠ CAUTION

Do not put the gearshift lever into the "N" (Neutral) position while driving, except in times of emergency, as this disengages engine braking, which could result in an accident.

NOTE:
Non-usage of vehicle for long duration may cause gradual rusting on brake disc surface as it is made of cast iron. This may result in noise/vibration. The same has no bearing on functioning of the vehicle. Regular driving of vehicle may prevent/remove rust, thus reducing the noise and vibration.

What Should You Do in Case of Malfunction or Emergency?

- **Warning light turns on**
  Stop immediately in a safe place and take corrective action.
  For details, refer to "Warning Lights and Indicators" in the "QUICK GUIDE" section or "Warning and Indicator Messages" in the "INSTRUMENT CLUSTER".
- **You feel strong shock from under the floor**
  Immediately stop in a safe place and check whether there is brake fluid leakage or fuel leakage, and also check whether there is any abnormality in the exhaust pipe, etc. If any abnormality is found, consult with an authorized SUZUKI dealer or a qualified workshop.
- **Sudden tyre puncture**
  Grasp the steering wheel firmly, carefully apply the brake, slowly reduce speed, and stop in a safe place.
- **You feel that the brake pedal is heavy to use**
  Via engine vacuum pressure, the vehicle utilizes a brake booster to reduce the force necessary for depressing the brake pedal. If this engine vacuum pressure decreases, you may feel as if the brakes require more force than usual to depress, but this is not abnormal. Depress the brake pedal as strongly as you need to.
- **Metallic screeching sound is heard from the brakes**
  Promptly consult with an authorized SUZUKI dealer or a qualified workshop. The disk brake pads (Suzuki genuine parts) are designed to emit a creaking/screeching sound as a function to warn the wear, as they have almost reached usage limit and replacement timing.

⚠ WARNING

The brakes could be losing their ability to function normally, which could result in an accident.
If you hear a metallic creaking/screeching sound, do not continue driving.

Use Engine Brake on a Long Downhill Slope

Use engine braking(*) in tandem with regular braking when driving on a long downhill slope. Release the accelerator pedal and shift down according to vehicle speed, release the accelerator pedal and shift down according to vehicle speed.

4-Speed Automatic transmission vehicles

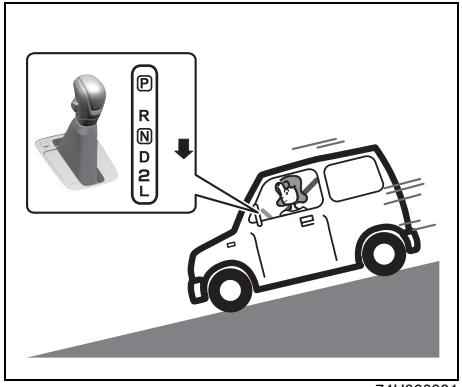

74U060001

For 4-Speed automatic transmission vehicle, turn off the overdrive (O/D) switch or shift the gearshift lever into “2” or “L”.

6-Speed Automatic transmission vehicles

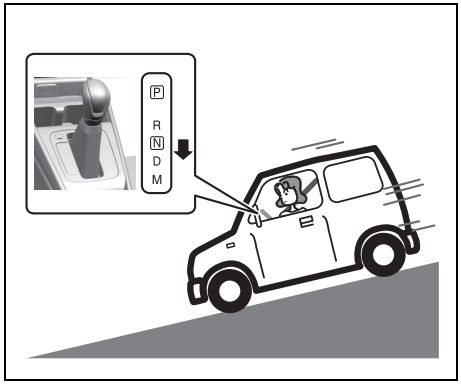

74U060002

For 6-Speed automatic transmission vehicle, shift the gearshift lever into “M” (manual mode) first. Then, pull “–” side of the shift paddle to shift down to an appropriate gear position.

*: Engine braking is a braking effect that occurs when you release your foot from the accelerator pedal while driving. The lower the gear, the greater the effect of engine braking becomes.

⚠ WARNING

Continuously depressing the brake pedal could cause the brakes to overheat, possibly rendering them ineffective.

When Side Wind Is Strong

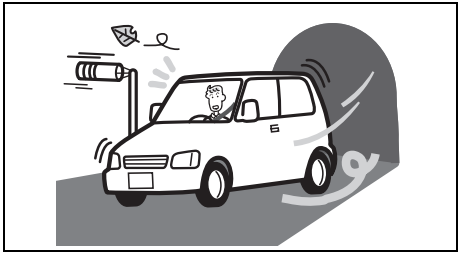

80T060060

At a tunnel exit, on a bridge, or when a large truck passes you, your vehicle might be blown slightly sideways by side wind. Do not panic. Firmly grasp the steering wheel, gradually reduce speed, and regain your intended course.

Drive Slowly on a Slippery Road Surface

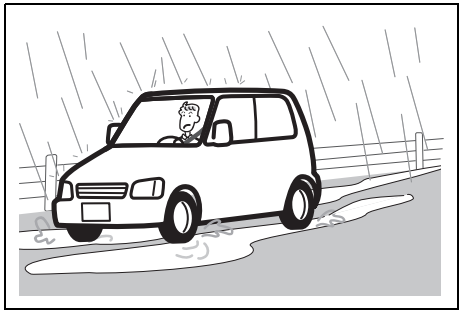

80T060070

⚠ CAUTION

When driving on wet, icy, or snowy roads, etc., refrain from sudden movements, such as sudden starting, acceleration, braking, turning or abrupt engine braking. Otherwise, there is the danger of an accident due to loss of traction.

Do not Drive on Puddles at High Speed

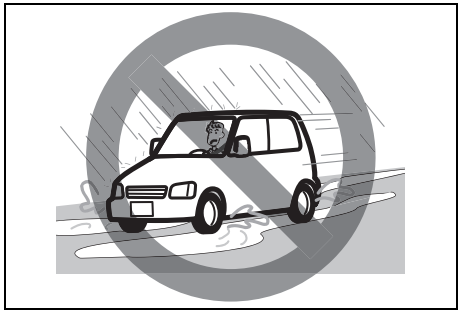

80T060080

⚠ CAUTION

When driving on puddles or on wet road surfaces at high speed, a thin surface of water is built between the wheels and the road surface, and the wheels may float. This is called as hydroplaning, which leads to a loss of control in the steering wheel and the brakes and possibly results in an accident.

Check Brake Effectiveness after Driving on Puddles or Washing a Vehicle

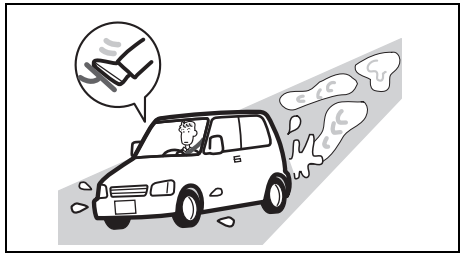

80T060090

- After verifying the safety of the surroundings, depress the brake pedal several times at low speed and check the brake effectiveness.
- If the brake effectiveness is still poor, depress the brake pedal at low speed gently and repeatedly until the brake effectiveness is fully recovered, to dry the brake equipment.

When Encountering a Flooded Area



80T060100

Avoid driving in a flooded area or a deep puddle. If driving in a flooded area is unavoidable, go slowly in the lowest gear. In case that you have driven in a flooded area, stop the vehicle in a safe and non flooded place while checking the brake effectiveness. Then, ask an authorized SUZUKI dealer or a qualified workshop to check the following inspection items.

- Function of brake
- Function of electrical components
- Changes of oil level and quality for engine, transmission and differential. In case that the oil is turbid whitely, water has been mixed in the oil and an oil change is required.
- Lubricant condition of the bearings, suspension joints, etc.

NOTICE

Avoid driving in a flooded area or a deep puddle. It may cause an engine stall, short in electrical components, engine and transmission damages, etc.

Highway Driving

When driving at highway speeds, pay attention to the following:

- Stopping distance progressively increases with vehicle speed. Apply the brakes far enough ahead of the stopping point to allow for the extra stopping distance.
- On rainy days, hydroplaning can occur. Hydroplaning is the loss of direct contact between the road surface and the vehicle's tyres due to a water film forming between them. Steering or braking the vehicle during hydroplaning can be very difficult, and loss of control can occur. Keep speed down when the road surface is wet.
- At high speeds, the vehicle may be affected by side winds. Therefore, reduce speed and be prepared for unexpected buffeting, which can occur at the exits of tunnels, when passing by a cut of a hill, or when being overtaken by large vehicles, etc.

Driving on Hills

4-Speed Automatic transmission vehicles

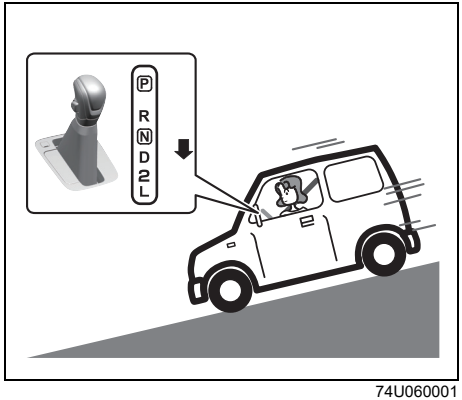

74U060001

6-Speed Automatic transmission vehicles

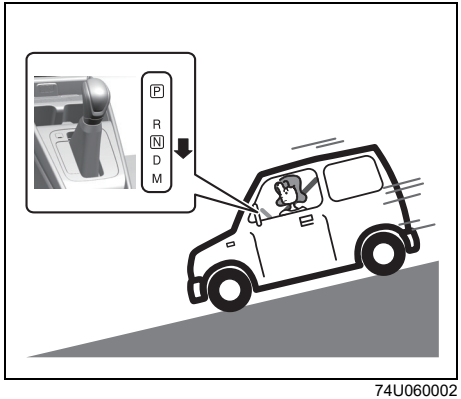

74U060002

- When driving on steep hills, the vehicle may begin to slow down and show a lack of power. If this happens, you should shift to a lower gear so that the engine will again be operating in its higher power range. Shift rapidly to prevent the vehicle from losing momentum.
- When driving down a hill, the engine should be used for braking by shifting to the next lower gear.

⚠ WARNING

Do not hold the brake pedal down too long or too often while going down a steep or long hill. This could cause the brakes to overheat, resulting in reduced braking efficiency. Failure to take this precaution could result in loss of vehicle control.

NOTICE

When descending a downhill, Never turn the ignition key to "LOCK" position or press the engine switch to change the ignition mode to LOCK (OFF). Emission control system damage may result.

Off-road Driving

Do not Drive in the Field Covered with Grown Grass



80T060110

Do not drive in the field covered with grown grass If you drive in the field covered with grass, it may cause accident or fire or vehicle damage by getting caught in grown grass.

⚠ WARNING

If loose grass, etc. becomes entangled in drive train parts or exhaust pipes, drive train components might become damaged or fire may result.

Improving Fuel Economy

NOTE:
Fuel economy (mileage) of the vehicle may vary due to several factors i.e. driving habits-gear change pattern, usage of A.C, Air pressure in the tyres, wind speed, traffic conditions, fuel quality-non adulterated standard fuel, maintenance of vehicle, road conditions, braking etc.

The following instructions will help you improve fuel economy.

Keep Tyre Pressures Correct

Under-inflation of the tyres can waste fuel due to increased running resistance of the tyres. Keep your tyres inflated to the correct pressure shown on the label on the driver's side door or the driver's door lock pillar.

Keep Weight to a Minimum

The heavier the load is, the more fuel the vehicle consumes. Unload any unnecessary luggage or cargo.

Avoid Excessive idling

If you park your vehicle for more than one minute, stop the engine and start it again later. When warming up a cold engine, do not allow the engine to idle or apply full throttle until the engine has reached operating temperature. Allow the engine to warm up by driving.

Avoid Fast Starts, Rapid Acceleration and Hard Braking

Avoid fast starts
Fast starts away from lights or stop signs will consume fuel unnecessarily and shorten engine life. Start off slowly.

Avoid unnecessary stops
Avoid unnecessary deceleration and stopping. Try to maintain a moderate, steady speed whenever possible. Slowing down and then accelerating again uses more fuel.

Keep a steady cruising speed
Drive at a constant speed that road and traffic conditions will permit.

Do not Race the Engine



74TBX06014

Revving the engine only consumes extra fuel and has no benefit.

NOTICE

Immediately after starting, the engine is often not yet fully warmed up. Therefore, revving the engine, starting to drive suddenly, or rapid acceleration can cause engine failure.

Drive with an Appropriate Gear for Vehicle Speed

Running the vehicle at a high engine rotation speed by using a low-speed gear will result in poor fuel economy. Use the correct gear according to the vehicle speed.

Keep the Air Cleaner Clean

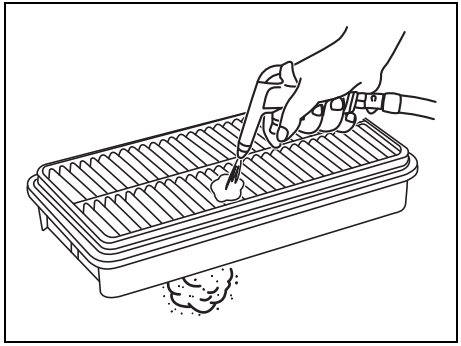

74TBX06015

If the air cleaner is clogged with dust, there will be greater intake resistance, resulting in decreased power output and increased fuel consumption.

Stuck Vehicle

If your vehicle gets stuck in snow, mud or sand, follow the directions below:

1) Shift the transmission back and forth between a forward range and reverse. This will create a rocking motion which may give you enough momentum to free the vehicle. Press gently on the accelerator to keep wheel spinning to a minimum wheel rpm. Remove your foot from the accelerator while shifting. Do not race the engine. Excessive wheel spin will cause the tyres to dig deeper, making it more difficult to free the vehicle.

NOTE:
You may have to turn the ESP® system off in order to allow spinning the wheels.

2) If your vehicle remains stuck after a few minutes of rocking, we recommend you to consult an authorized SUZUKI dealer or a qualified workshop or a roadside assistance service. If a towing service is not available in an emergency, your vehicle may be temporarily towed by a towing cable or chain secured to the towing eye either on the front or rear of the vehicle. Refer to “Towing by Using Towing Eye” in the “EMERGENCY SERVICE” section.

⚠ WARNING

- **Do not allow anyone to stand near the vehicle when you are rocking it, and do not spin the wheels faster than an indicated 40 km/h (25 mph) on the speedometer. Personal injury and/or vehicle damage may result from spinning the wheels too fast.**

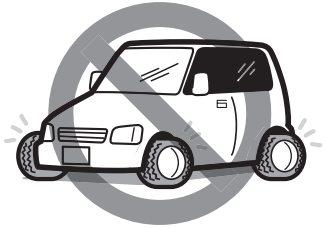

74TBX06016

- **In addition to following the driving tips in this section, it is important to observe the following precautions.**
  - **Check that your tyres are in good condition and always maintain the specified tyre pressure. Refer to "Tyres" in "INSPECTION AND MAINTENANCE" section for details.**

(Continued)

⚠ WARNING

(Continued)

- **Do not use tyres other than those specified by Suzuki. Never use different sizes or types of tyres on the front and rear wheels. For information regarding the specified tyres, refer to the tyre information label located on the driver's door lock pillar.**
- **Never use oversized tyres or special shock absorbers and springs to raise (jack up) your vehicle. This will change the handling characteristics. Oversized tyres may also rub against the fender over bumps, causing vehicle damage or tyre failure.**
- **After driving through water, test the brakes while driving at a slow speed to see if they have maintained their normal effectiveness. If the brakes are less effective than normal, dry them by repeatedly applying the brakes while driving slowly until the brakes have regained their normal effectiveness.**

NOTICE

Do not continue rocking the vehicle for more than a few minutes. Prolonged rocking can cause engine overheating or transmission damage.

Precaution for Handling Vehicle

Do not Apply Strong Force to Exterior Parts

NOTICE

Do not apply strong force to the body panel, spoiler, front and rear bumper, side skirts, etc. These forces can cause damage to these exterior parts.

Be Careful of Uneven Road Surface

NOTICE

In the following cases, the bumper or the lower part of the vehicle could get damaged. Ensure proper care.

- **Entering the areas where there is uneven road surface, such as road shoulder**
- **Driving on roads with grooves, bumps or potholes**

Do not Modify Your Vehicle Illegally



74TBX06017

⚠ WARNING

- **If you modify your vehicle illegally, there is a danger of a fire or an accident. Illegal modifications might adversely affect handling, performance or durability. Also, this could even violate laws and ordinances.**
  Do not install unsuitable parts to your vehicle or do not make your own adjustments or wiring. Such modifications also affect advanced safety equipment such as the SUZUKI SAFETY SUPPORT, and there is a danger that it may not operate properly or may operate in situations where it should not.

(Continued)

⚠ WARNING

(Continued)

- **Do not use wheels or wheel nuts other than specified Suzuki genuine products. Doing so could lead to accidents, such as nuts loosening and the wheel coming off while driving. Also, fuel consumption and driving stability could worsen, or it could result in other malfunctions.**

NOTICE

- **When installing or removing electrical equipment such as radio equipment, navigation, audio equipment or electronic toll control equipment, consult with an authorized SUZUKI dealer or a qualified workshop. Also, do not operate electrical equipment directly from the battery terminals or connect ground wires directly. Otherwise, there is a danger of hindering the functioning of electronic components, causing fire, malfunction, battery runout, etc.**

(Continued)

NOTICE

(Continued)

- **Only a troubleshooting device designed for inspection and maintenance for this model can be connected to the vehicle's onboard diagnostics system. Connecting a device other than that specified could hinder the functioning of electronic components and cause battery runout, etc.**

When Installing, Removing and Repairing Parts

⚠ WARNING

The SRS airbag system and the seat belt pretensioner system could activate unexpectedly or could be rendered ineffective if the parts that affect their functions are adjusted or arranged. In the following cases, these systems will be adversely affected. consult with an authorized SUZUKI dealer or a qualified workshop beforehand.

- **When removing the steering wheel and conducting repairs around the steering wheel, etc.**
- **When conducting repairs around the center console, around the instrument cluster, under the front seats or to electrical wiring**
- **When installing audio equipment, etc.**
- **When conducting sheet metal painting or repairs around the dashboard**
- **When replacing the front seats or conducting repairs around the seats**
- **Repairs around the front pillar, the back pillar or the roof side**
- **When conducting repairs around the center pillar**

Be Careful When Placing Accessories

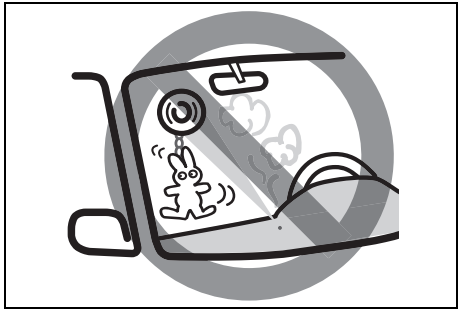

80T060120

⚠ WARNING

Do not attach accessories to the window glasses. Accessories and suction cups could hinder vision, or a suction cup could act as a lens and cause a fire. Also, if an airbag is activated, such accessories could be ejected outward within the vehicle, possibly resulting in injury.

When Spilling Drinks or Liquids

⚠ WARNING

Do not allow liquids to spill, splash or spray inside the vehicle. The following items could malfunction, or fire could result. In the case of spilling drinks, etc., promptly consult with an authorized SUZUKI dealer or a qualified workshop.

- **SRS airbag system**
- **Audio equipment**
- **Electrical parts such as switches and wiring**
- **Movable parts such as the gearshift lever or seat belt buckles**

NOTICE

The sensor of the seat belt reminder is built into the front passenger's seat cushion.
If you spill liquid such as soft drinks or juice, the sensor of the seat belt reminder may be damaged.
If you spill any liquid on the seat cushion, immediately wipe it with a soft cloth.

Running-in

NOTICE

The future performance and reliability of the engine depends on the care and restraint exercised during its early life. It is especially important to observe the following precautions during the first 960 km (600 miles) of vehicle operation.

- **After starting, do not race the engine. Warm it up gradually.**
- **Avoid prolonged vehicle operation at a constant speed. Moving parts will break in better if you vary your speed.**
- **Start off from a stop slowly. Avoid full throttle starts.**
- **Avoid hard braking, especially during the first 320 km (200 miles) of driving.**
- **Do not drive slowly with the transmission in a high gear.**
- **Drive the vehicle at moderate engine speeds.**
- **Do not tow a trailer during the first 960 km (600 miles) of vehicle operation.**

Catalytic Converter

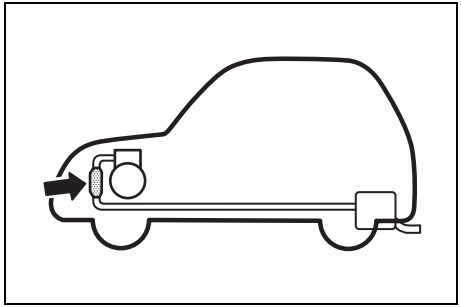

74TBX06020

The purpose of the catalytic converter is to minimize the amount of harmful pollutants in your vehicle's exhaust. Use of leaded fuel in vehicles equipped with catalytic converters is prohibited, because lead deactivates the pollutant-reducing components of the catalyst system.

The converter is designed to last the life of the vehicle under normal usage and when unleaded fuel is used. No special maintenance is required on the converter. However, it is very important to keep the engine properly tuned. Engine misfiring, which can result from an improperly tuned engine, may cause overheating of the catalytic converter. This may result in permanent heat damage to the catalytic converter and other vehicle components.

NOTICE

To minimize the possibility of catalytic converter or other vehicle damage:

- **Maintain the engine in the proper operating condition.**
- **In the event of an engine malfunction, particularly one involving engine misfire or other apparent loss of performance, have the vehicle serviced promptly.**
- **Do not turn off the engine or interrupt the ignition when the transmission is in gear and the vehicle is in motion.**
- **Do not try to start the engine by pushing or towing the vehicle, or coasting down a hill.**
- **Do not idle the engine with any spark plug wires disconnected or removed, such as during diagnostic testing.**
- **Do not idle the vehicle for prolonged periods if idling seems rough or there are other malfunctions.**
- **Do not allow the fuel tank to get near the empty level.**



74TBX06021

⚠ WARNING

Be careful where you park and drive; the catalytic converter and other exhaust components can get very hot. As with any vehicle, do not park or operate this vehicle in areas where combustible materials such as dry grass or leaves can come in contact with a hot exhaust system.

When Driving Hybrid Vehicle

For economical and ecological driving, pay attention to the following points:

Shift lever operation

Shift the shift lever to D when stopped at a traffic light, or driving in heavy traffic etc.
Shift the shift lever to P when parking.
When using the N, there is no positive effect on fuel consumption.
In the N, the gasoline engine operates but electricity cannot be generated.
Also, when using the air conditioning system, etc., the hybrid battery (traction battery) power is consumed.

Accelerator pedal/brake pedal operation

- Drive your vehicle smoothly. Avoid abrupt acceleration and deceleration. Gradual acceleration and deceleration will make more effective use of the electric motor (traction motor) without having to use gasoline engine power.
- Avoid repeated acceleration. Repeated acceleration consumes hybrid battery (traction battery) power, resulting in poor fuel consumption. Battery power can be restored by driving with the accelerator pedal slightly released.

Warming up before driving

Since the gasoline engine starts up and cuts out automatically when cold, warming up the engine is unnecessary. Moreover, frequently driving short distances will cause the engine to repeatedly warm up, which can lead to excess fuel consumption.

MEMO

OTHER CONTROLS AND EQUIPMENT

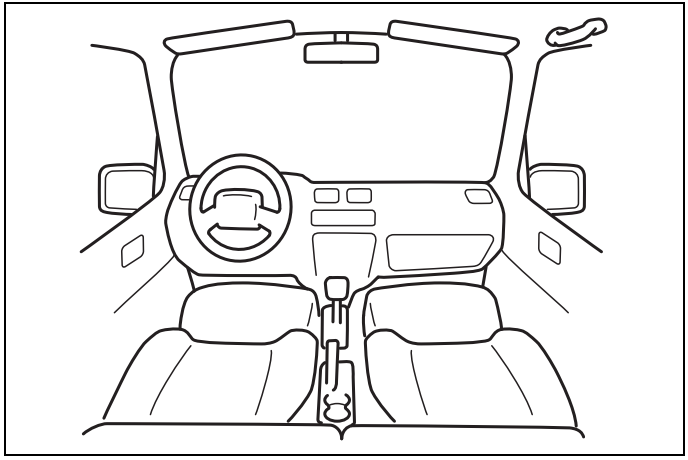

60G407

Fuel Filler Opening 7-1
Refueling 7-2
Hood 7-4
Sun Visor 7-6
Interior Light 7-7
Accessory Socket 7-9
Drink Holder 7-10
Storage Area 7-11
Assist Grips 7-13
Footrest 7-13
Door Pocket 7-13
USB Socket 7-14
USB Charging Socket 7-14
Front Seat Back Pocket 7-15
Luggage Compartment Hook 7-15
Luggage Compartment Cover 7-16
Heating and Air Conditioning System 7-16
Manual heating and air conditioning system (with digital control panel) (if equipped) 7-18
Automatic Heating and Air Conditioning System (Climate Control) (if equipped) 7-25
Radio Antenna 7-32
Installation of Radio frequency Transmitters 7-32
Audio Function 7-32
Remote Audio Controls 7-33
Roof Rails 7-34
Wireless Charger (if equipped) 7-34

Fuel Filler Opening

Make sure to read “Refueling” in this section.

⚠ WARNING

Be sure to observe the following points when refueling. Otherwise, gasoline may catch a fire from fuel and it may cause a fire.

- **Always stop the engine first.**
- **Close all the doors and windows when refueling.**
- **As gasoline is highly flammable, open sparks such as lit cigarettes are strictly prohibited.**

Fuel Filler Door

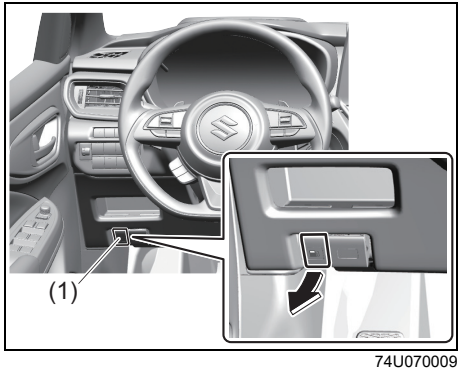

74U070009

A fuel filler door is located on the left rear side of the vehicle. The fuel filler door can be unlocked by pulling up the opener lever (1) located on the outboard Position of instrument Panel and locked by simply closing the door.

Fuel Filler Cap

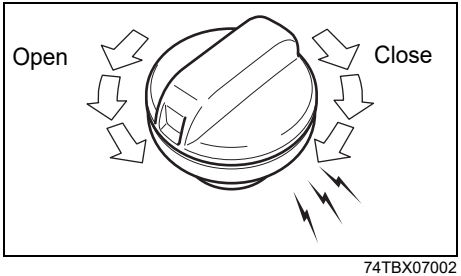

74TBX07002

- To open the fuel filler cap, turn it counter-clockwise.
- To close the fuel filler cap, turn it clockwise until you hear more than 2 clicks.

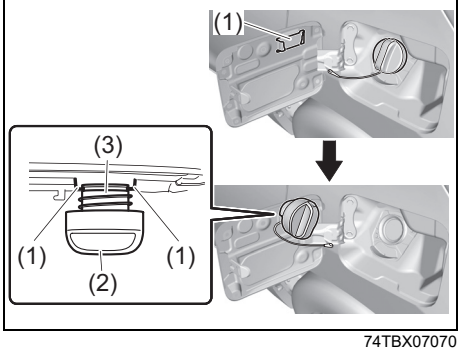

74TBX07070

NOTE:
The cap holder (1) holds the fuel filler cap (2) by hooking the groove (3) when refueling.

⚠ WARNING

- **If you open the fuel filler cap suddenly, fuel may be under pressure and may spray out. Loosen the fuel filler cap slowly. After air deflating sound stops, open the fuel filler cap.**
- **If fuel spills out, an accident such as a fire may occur. Also, if you leave spilled fuel as it is, it may cause paint staining, discoloration or cracking. Be careful not to spill out fuel. If you spill it out, wipe it off with a soft cloth.**
- **If the fuel filler cap is not closed securely, it may cause fuel leakage or a fire. After refueling, close the fuel filler cap until you hear more than 2 clicks.**
- **If you use the fuel cap other than a genuine Suzuki cap, it may cause fuel leakage. Do not use the fuel cap other than a genuine Suzuki cap.**

Refueling

Watch Out for Fire

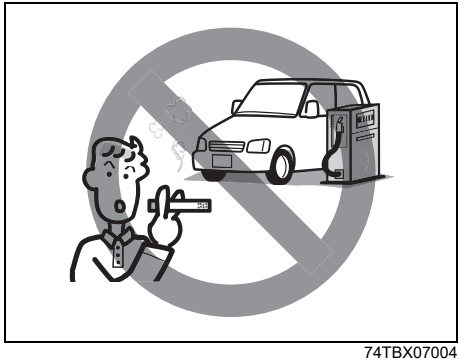

74TBX07004

⚠ WARNING

Be sure to observe the following points when refueling. Otherwise, gasoline may catch a fire from fuel and it may cause a fire.

- **Always stop the engine first.**
- **Close all the doors and windows when refueling.**
- **As gasoline is highly flammable, open sparks such as lit cigarettes are strictly prohibited.**

When Refueling at a Self-service Gas Station

⚠ WARNING

When refueling at a self-service gas station, be sure to observe the following points.

- **If substantial static electricity is accumulated within your body, a spark could ignite fuel vapors and possibly cause burns. Before opening the fuel filler cap, discharge any static electricity* that might have accumulated in your body, by touching a metal part of the vehicle body or the gas pump machine. In addition, do not re-enter the vehicle while refueling, as static electricity could be charged to your body again.**
- **Do not allow others who have not discharged their static electricity to come close to the fuel filler opening.**

***Take special care when air is dry, as this can cause your body to become charged with static electricity more easily. In addition, wearing layers of clothing can generate static electricity due to the friction of the fibers.**

(Continued)

⚠ WARNING

(Continued)

- **If you open the fuel filler cap suddenly, fuel may be under pressure and may spray out. Loosen the fuel filler cap slowly. After air deflating sound stops, open the fuel filler cap.**
- **If you do not insert the fuel filler nozzle securely into the fuel filler opening, fuel may spill out. Insert the fuel filler nozzle securely into the fuel filler opening until it stops.**
- **Pull the gas pump filler nozzle lever until it stops.**

(Continued)

⚠ WARNING

(Continued)

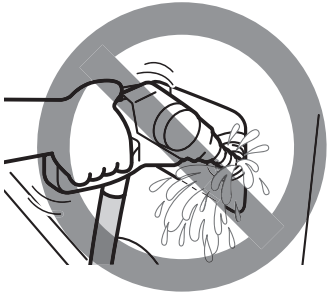

74TBX07005

- **If you continue to refuel after the automatic stop to top up the tank, fuel could overflow. When the automatic stop function of gas pump filler nozzle is activated, stop refueling.**

  ***Depending on the type of gas pump machine being used, the automatic stop function could activate early and refueling might not be possible. Please follow the instructions of the employees at the gas station.**

(Continued)

⚠ WARNING

(Continued)

- **If fuel spills out, an accident such as a fire may occur. Also, if you leave spilled fuel as it is, it may cause paint staining, discoloration or cracking. Be careful not to spill out fuel. If you spill it out, wipe it off with a soft cloth.**
- **If the fuel filler cap is not closed securely, it may cause fuel leakage or a fire. After refueling, return the fuel filler nozzle to its original position and close the fuel filler cap until you hear more than 2 clicks.**
- **Fuel contains substances harmful to the human body. Do not breathe in vaporized fuel.**
- **In addition, be sure to observe all the warnings posted at the gas station.**

Use Unleaded Gasoline Only

NOTICE

Using leaded gasoline, low-quality gasoline or other types of fuel (such as alcohol and diesel oil) can cause harmful effects to the engine and fuel delivery system.
Do not use fuel other than unleaded gasoline.

Hood

⚠ WARNING

- **As the hood is heavy, if a child tries to open or close it, the child may get injured. Do not allow a child to open or close the hood.**
- **As the engine compartment becomes hot, it may cause burns. When opening the hood, do not allow a child to come close to the hood.**
- **If you leave any tool or cloth in the engine compartment, it may cause a malfunction. Also, as the engine compartment becomes hot, it may result in vehicle fire. Do not leave any tool or cloth for inspection or cleaning in the engine compartment.**

⚠ CAUTION

If you come close to a running drive belt or a cooling fan (radiator fan), hands, hair, clothing, etc. may be caught and you may get injured. When the engine is running, keep away from the drive belt or the cooling fan (radiator fan).

Opening the Hood

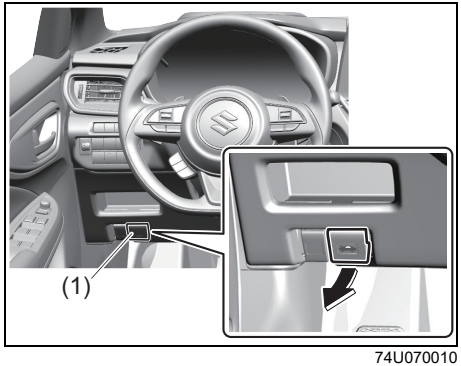

74U070010

1) Pull up the hood release lever (1) located under the driver's side instrument panel in the outboard position (Right of the fuel lever). This will disengage the hood lock halfway.

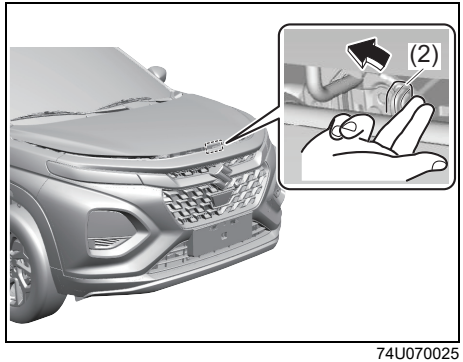

74U070025

2) Push the under-hood release lever (2) sideways with your finger, as shown in the illustration. While pushing the lever, lift up the hood.

⚠ CAUTION

The under-hood release lever can be hot enough to burn your finger while the engine is running or right after the engine stopped.
If you try to open the hood while the engine is running or right after the engine stopped, touch the under-hood release lever after it becomes cool enough.

NOTICE

If you lift up the hood with the wiper arms raised, the wiper arms and the hood may get damaged.
Do not lift up the hood with the wiper arms raised.

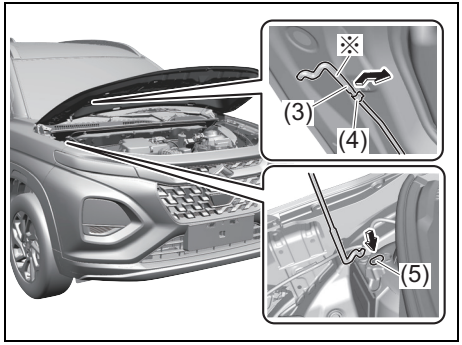

74U070026

3) While holding the hood, pull the prop rod (3) out from the holding clip (4), and then insert the end of the rod into the designated hole (5).

⚠ CAUTION

- **The prop rod can be hot enough to burn your finger while the engine is running or right after the engine stopped. If you would like to use the prop rod while the engine is running or right after the engine stopped, touch the prop rod after it becomes cool enough.**
- **If the prop rod slips out, you may get caught in the closing hood. Insert the end of the prop rod into the hole securely.**
- **The prop rod may slip out when the hood is blown by wind. If this occurs, you may get caught in the closing hood. Be very careful when you open the hood on a windy day.**

NOTE:
When you pull out the prop rod from the holding clip, hold the ※ part.

Closing the Hood

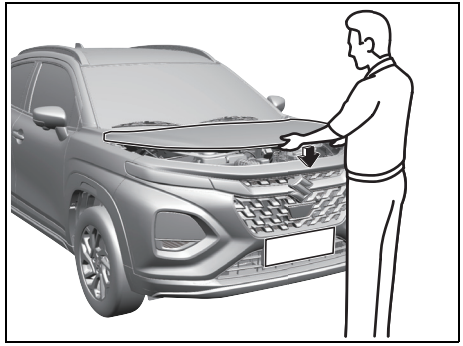

74U070027

1) Lift up the hood slightly and remove the prop rod from the hole. Put the prop rod back into the holding clip.

2) Lower the hood to about 20 cm above the hood latch, and then let it drop down. Check that the hood is securely latched after closing.

⚠ WARNING

If the hood is not fully closed, it can fly up unexpectedly during driving, obstructing your view and resulting in an accident. Check that the hood is fully closed and latched before driving.

⚠ CAUTION

When closing the hood, the occupant's body such as hands may get caught in the hood and get injured. Also, pushing on the hood from the top may damage it.
When closing the hood, check that no part of the occupant's body such as hands is in the path of the hood.

Sun Visor

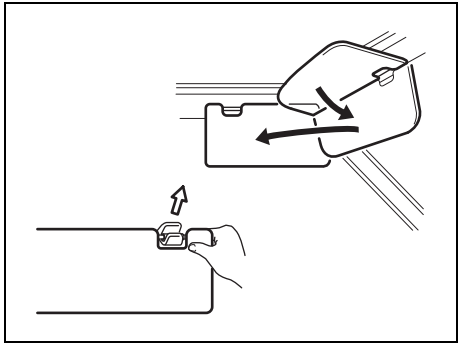

79J161

The sun visors can be pulled down to block glare coming through the windshield, or they can be unhooked and turned to the side to block glare coming through the side window.

Vanity Mirror (if equipped)

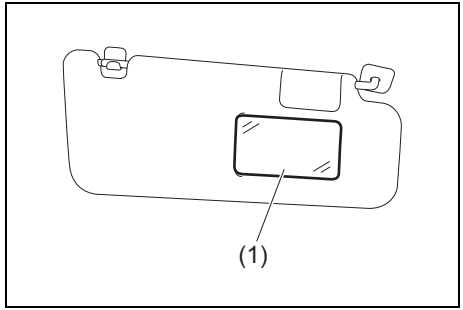

74U070011

(1) Vanity mirror

⚠ WARNING

- **If you use the vanity mirror while driving, you may lost control of the vehicle, resulting in an accident. Do not use the vanity mirror while driving.**
- **Do not place any object on the location where an airbag is stored or come close to the location where airbag is stored, when using a vanity mirror. Doing so may cause the airbag to deploy and cause serious injury due to the impact of airbag.**

Interior Light

NOTICE
If you turn on the interior light for a long time with the engine stopped, the lead-acid battery may discharge. Do not turn on the interior light for a long time with the engine stopped.

Front

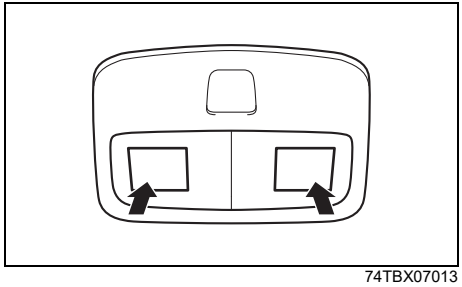

74TBX07013

Push the switch to turn on the light and push it again to turn off the light.

NOTE:
If your vehicle is equipped with the keyless push start system or the keyless entry system, the light will automatically be turned off to prevent the lead-acid battery from discharging when the following conditions are simultaneously met:

- *The ignition switch is in the "LOCK" position, or the ignition mode is "LOCK" (OFF).*
- *The hazard warning lights, the position lights and the headlights are off.*
- *After 15 minutes of the light on.*

Center

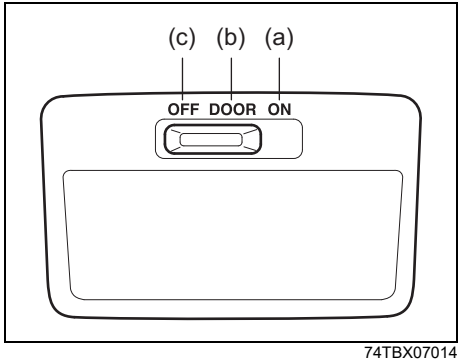

74TBX07014

This light switch has three positions which function as described below:

ON (a)
The light comes on and stays on regardless of whether the door is open or closed.

NOTE:
If your vehicle is equipped with the keyless push start system or the keyless entry system, the light will automatically be turned off to prevent the lead-acid battery from discharging when the following conditions are simultaneously met:

- *The ignition switch is in the "LOCK" position, or the ignition mode is "LOCK" (OFF).*
- *The hazard warning lights, the position lights and the headlights are off.*
- *After 15 minutes of the light on.*

DOOR (b)

- The light comes on when the door is opened. After closing all doors, the light will remain on for 15 seconds and then fade out. If you insert the key, or press the engine switch to change the ignition mode to "ACC" or "ON" during this time, the light will start to fade out immediately. After removing the key from the ignition switch or press the engine switch to change the ignition mode to "LOCK" (OFF), the light will turn on for 15 seconds and then fade out.
- When the ignition switch is in LOCK position, or the ignition mode is "LOCK" (OFF), to prevent the lead-acid battery from discharging, the light will automatically be turned off when a period of 15 minutes has elapsed after any of the doors (including the tailgate) is opened and other operations are not done.

OFF (c)
The light remains off even when the door is opened.

Luggage Compartment Light

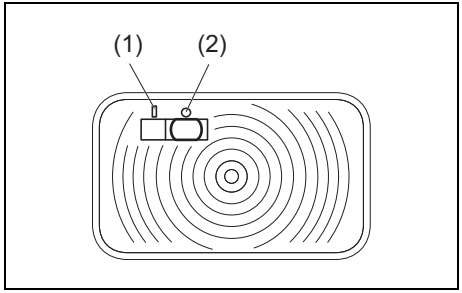

74TBX07015

When you open the tailgate with the luggage compartment light switch in the “ON” position (1), the light comes on for about 15 minutes.
When the luggage compartment light switch is in the “OFF” position (2), the light remains off regardless of whether the tailgate is open or close.

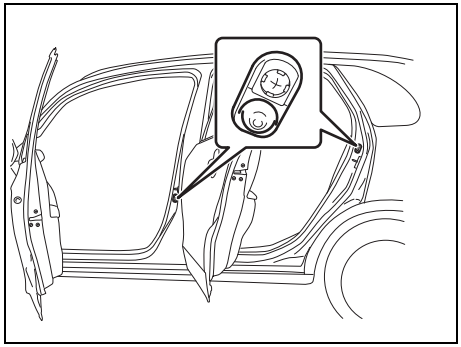

74TBX07016

NOTE:
The number of doors involved in the lighting operation of the interior light depends on the vehicle specification. If there is a switch (rubber protrusion) at the door opening as shown, the door is involved in the lighting operation. The tailgate is also involved in this operation even without the rubber protrusion.

Glove Box Light (If equipped)

Refer to “Glove Box” in this section.

Accessory Socket

Center Console

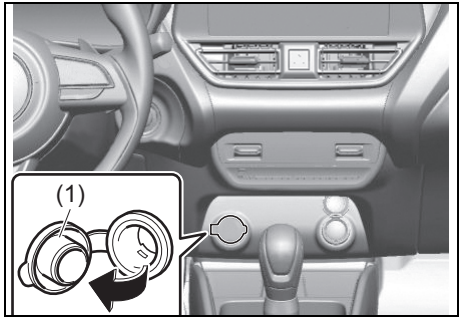

74U070012

The accessory socket will work when the ignition switch is in “ACC” or “ON” position or the engine switch is in ACC or ON mode.
This socket can be used to provide 12 volt/120 watt/10 ampere power for electrical accessories. Check that the rubber cap remains on the socket when the socket is not in use.
When using the accessory socket, open the rubber cap (1).

⚠ WARNING

When the accessory socket is not in use, closed the rubber cap. If any foreign material enters the accessory socket, it may cause a malfunction or short circuit.

NOTICE

- **To prevent the fuse from being blown, when using sockets at the same time, do not exceed the total combined power capacity of 12 volt/120 watt/10 ampere.**
- **Use of inappropriate electrical accessories can cause damage to your vehicle’s electrical system. Check that any electrical accessories you use are designed to plug into this type of socket.**
- **Check that the cap remains on the socket when the socket is not in use.**
- **When the ignition switch is in “LOCK” position or the ignition mode to LOCK (OFF) during using the accessory socket, the following accidents may occur;**
  - **– the audio or navigation system does not turn off.**
  - **– the keyless entry system does not work, etc.**

If they occur, disconnect the item from the accessory socket and check whether the electrical equipments work properly.
If the problem persists, ask an authorized SUZUKI dealer or a qualified workshop to have the system inspected.

Drink Holder

Floor Console

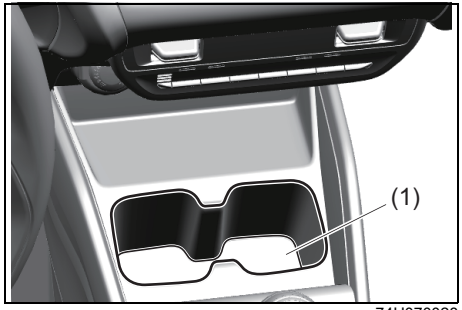

74U070028

(1) Floor console drink holder

Door

Front

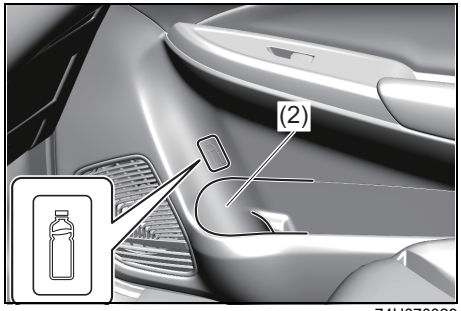

74U070029

Rear

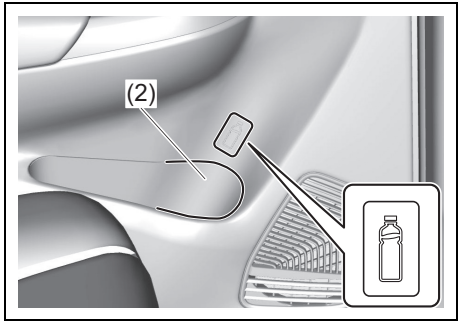

74TBX07024

(2) Bottle holder

NOTE:
Suzuki recommends to use maximum 1 liter capacity of bottle.

⚠ WARNING

- **Be careful and use a lid for a drink not to spill out liquid. Spilling out hot liquid can cause burn injury. In addition, if liquid spills out on the following parts, it may cause a fire or a malfunction and an airbag system may not work properly.**
  - **– Navigation system, audio system or the relevant switches**
  - **– Wiring or electrical components under the floor**
  - **– Moving part of the gearshift lever or the seatbelt buckle**
- **If you place a long drink container, sharp-edged, hard or breakable objects in the drink holders, these objects may be thrown out, resulting in personal injury and hindering your view. In the driver's side drink holder or the front passenger's side drink holder, you can place a can, a cup or a plastic bottle.**
- **Do not place a long drink container in the driver's side drink holder. The container may hinder your view, resulting in an accident.**

NOTE:
- *If you place the keyless remote controller in a drink holder or a bottle holder, it may not be detected.*
- *If you spill or drop liquid accidentally, have your vehicle inspected by an authorized SUZUKI dealer or a qualified workshop.*

Storage Area

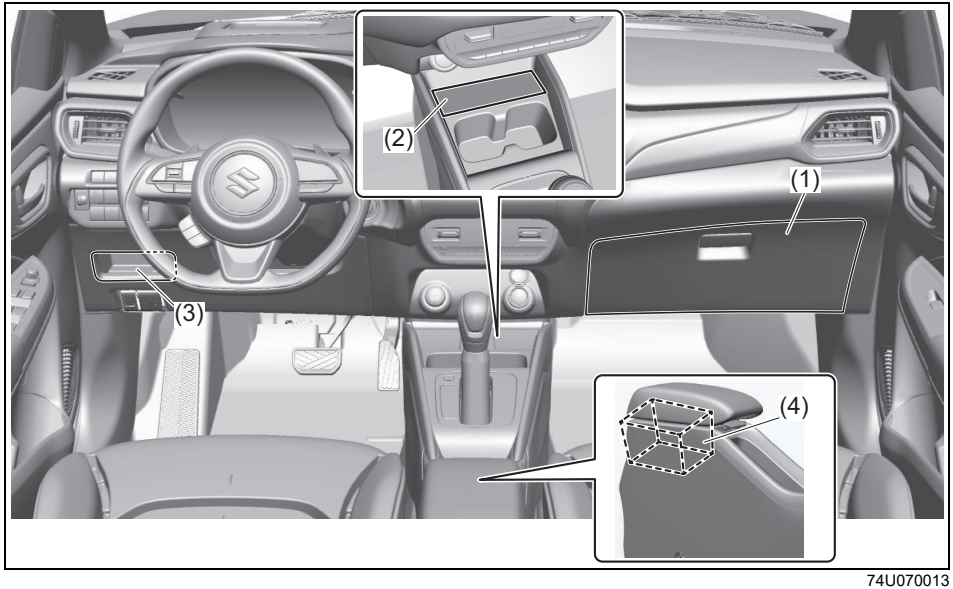

74U070013

(1) Glove box
(2) Floor console tray (if equipped)
(3) Driver's side pocket
(4) Front armrest with console box

Each item in the figure is a typical example; the actual equipment depends on the vehicle type.

⚠ WARNING

- **If any object gets caught in the brake pedal or the accelerator pedal, you may not operate the pedal properly, resulting in an accident. If you use a storage area without a lid, do not place the object which may fall out while driving.**
- **If there is any object within the area where the front passenger's airbag could inflate, the object may be thrown out or the front passenger's airbag may not inflate properly. Do not place a big object on the instrument panel tray.**

⚠ CAUTION

If you use a storage area with a lid, do not drive the vehicle with the lid open. In acceleration, a sudden braking or an collision, your body may be hit by the lid or the object which falls out from the storage area.

NOTE:
If you place the keyless remote controller in any of storage areas, it may not be detected.

Using Storage Area with a Lid

Glove box

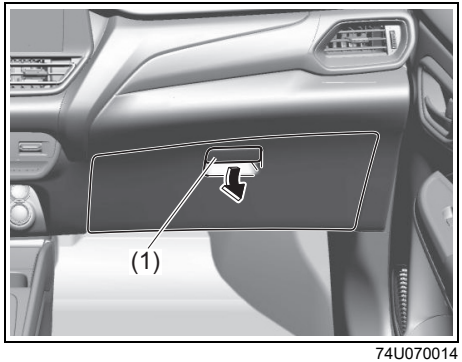

74U070014

- To open the glove box, pull the latch lever (1).
- To close it, push the lid until it is latched securely.

⚠ WARNING

- **Never drive with the glove box lid open. It could cause injury if an accident occurs.**
- **Do not leave cigarette lighters or spray cans in the glove box. If a cigarette lighter or spray can is in a place such as the glove box, it may light accidentally when luggage is loaded, causing a fire.**

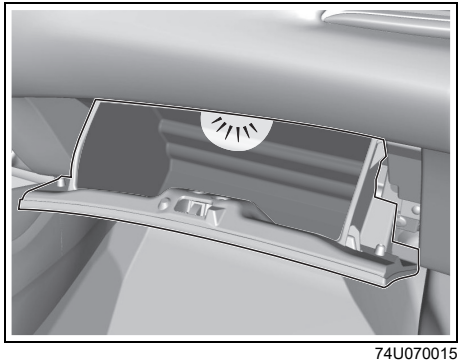

74U070015

The glove box light (If equipped) stays on while the lid is open.

Front armrest with console box

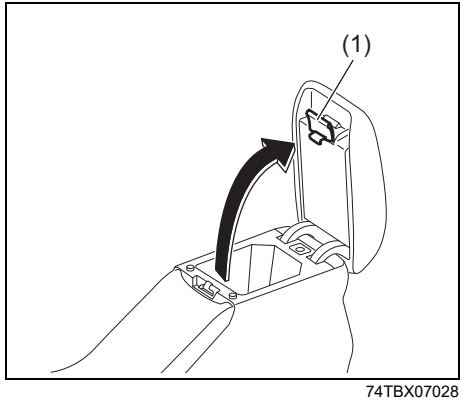

74TBX07028

Use this stowage for keeping small items. Open the compartment by raising the top lid while keeping the lever (1) up.

NOTICE

To avoid damage to the armrest, do not lean on it or allow a child to sit on it.

NOTE:
Always close the lid after you put something into or take something out of the box.

Assist Grips

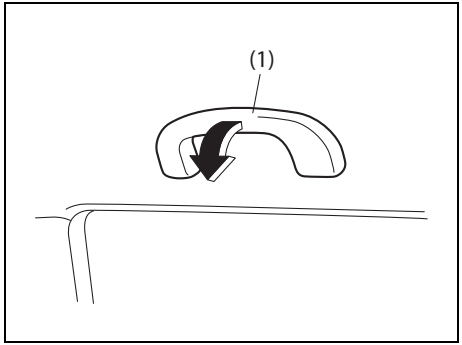

74TBX07029

Assist grips are provided for convenience. Pull the assist grip (1) towards you.

NOTICE
To avoid damaging the assist grip and the molded headlining, do not hang down the assist grip.

Footrest

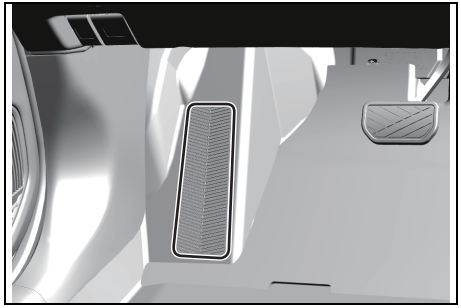

74U070030

Use the footrest as a support for your left foot only.

Door Pocket

Front

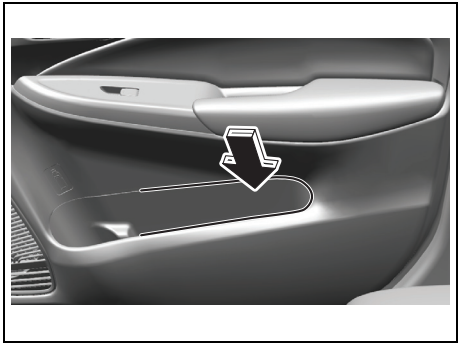

74U070016

Rear

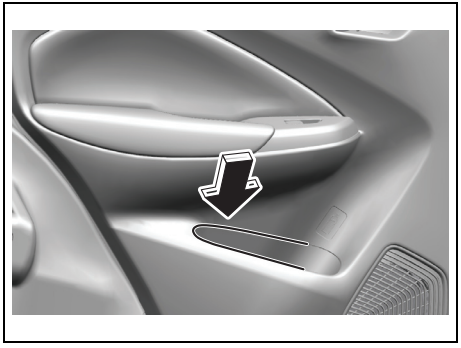

74TBX07033

Each pocket is provided for holding light and soft things such as gloves, newspapers or magazines.

⚠ CAUTION

- **If an accident occurs, objects such as bottles, cans, etc. in the door pocket can injure the occupants. Do not put hard or breakable objects in the door pocket.**
- **If you grab and pull the door pocket, it may be broken, resulting in personal injury. When closing a door, do not grab and pull the door pocket.**

NOTE:
If you place the keyless remote controller in a door pocket, it may not be detected.

USB Socket

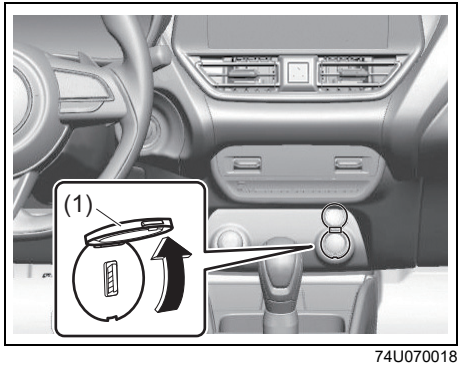

74U070018

Open the cover (1), and then connect your portable digital music player, etc. to this socket to enjoy music through the vehicle's audio system. Refer to the supplementary manual for details.

⚠ WARNING

If foreign material enters the USB socket, a malfunction or a short circuit may occur.
Always close the cover when the USB socket is not in use.

USB Charging Socket

When the ignition switch is in "ACC" or "ON" position, or the ignition mode is ACC or ON, you can charge your mobile device such as your smart phone by using the connecting cable (commercial item).

Left side socket (1)
The standard capacity is 5 V / 2.4 A (12 W) for one socket and USB Type-A can be used.

Right side socket (2)
The standard capacity is 5 V / 3.0 A (15 W) for one socket and USB Type-C can be used.

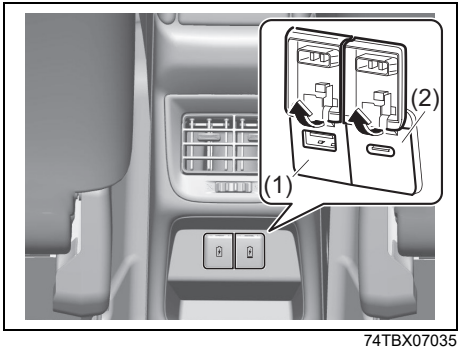

74TBX07035

Open the cover to use the USB charging socket.

⚠ WARNING

When the USB charging socket is not in use, close the cover. If any foreign material enters the USB charging socket, it may cause a malfunction or short circuit.

NOTICE

Do not charge your mobile device for a long period of time, while the engine is stopped. Otherwise, the lead-acid battery may run out.

NOTE:
- *The USB charging socket should be used only for charging.*
- *For some models, charging may pause. However, this is not a malfunction.*
- *Depending on the vehicle conditions such as the following examples, charging may temporarily pause.*
  - *– When the inside temperature of the vehicle is high after parking the vehicle under the blazing sun*
  - *– When the engine is started*

Front Seat Back Pocket

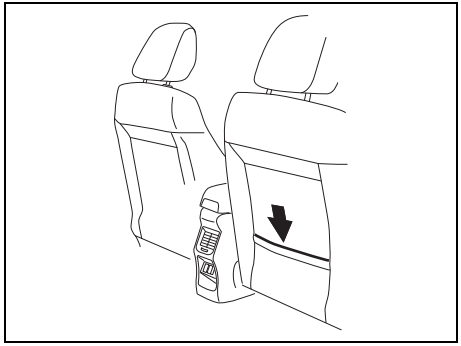

74U070019

This pocket is provided for holding light and soft things such as gloves, newspapers or magazines.

⚠ CAUTION

- **If an accident occurs, objects such as bottles, cans, etc. can injure the occupants in the rear seat. Do not put hard or breakable objects in the pocket.**
- **If you put sharp or heavy objects in the pocket, the seat may be damaged. Do not put sharp or heavy objects in the pocket.**

Luggage Compartment Hook

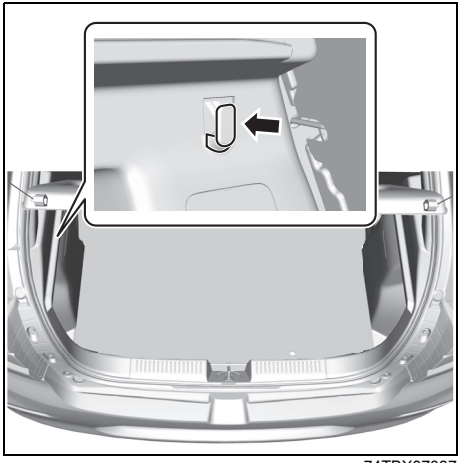

74TBX07037

You can hang the shopping bag or other suitable objects on the hook.
This hook is not designed for large or heavy items.

NOTICE

To avoid breaking the hook, do not hang items heavier than the following weight.
Shopping hook: 1 kg (2.2 lbs)

Luggage Compartment Cover

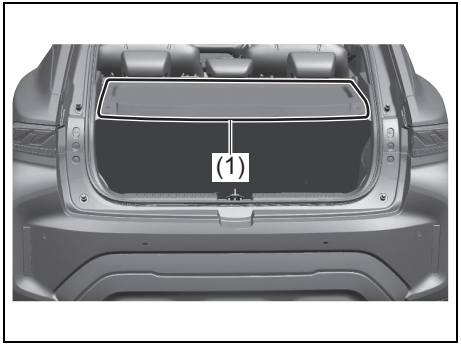

74U070051

Luggage or other cargo placed in the luggage compartment is hidden from view by a luggage compartment cover (1).

⚠ WARNING

Do not carry items on top of the luggage compartment cover, even if they are small and light. Objects on top of the cover could be thrown about in an accident, causing injury, or could obstruct the driver's rear view.

Heating and Air Conditioning System

There are two types of heating and air conditioning system as follows:
- Manual heating and air conditioning system (with digital control panel)
- Automatic heating and air conditioning system (climate control)

Air Outlet

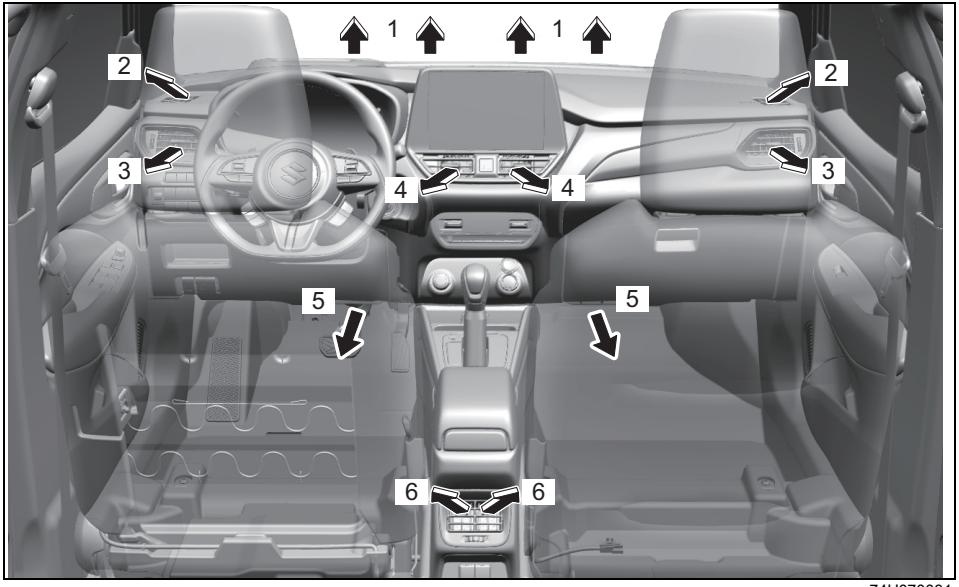

74U070031

1. Windshield defroster outlet
2. Side defroster outlet
3. Side outlet
4. Center outlet
5. Floor outlet
6. Rear outlet

Center outlet

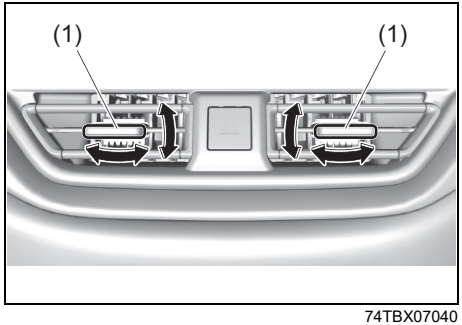

74TBX07040

Move the knob (1) vertically or horizontally to adjust the direction of airflow as desired.

⚠ CAUTION

Prolonged exposure to hot air from the heater or air conditioner could result in low temperature burns. All vehicle occupants, particularly children, the elderly, those with special needs, individuals with delicate skin, and sleeping individuals, should maintain sufficient distance from the air outlets to prevent prolonged exposure to hot airflow.

Side outlet and rear outlet

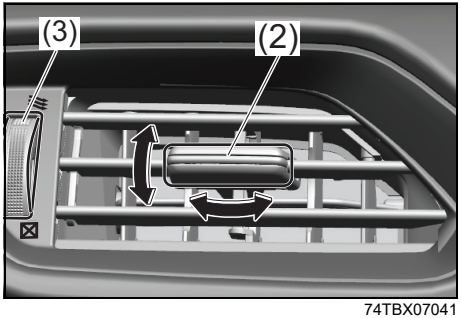

74TBX07041

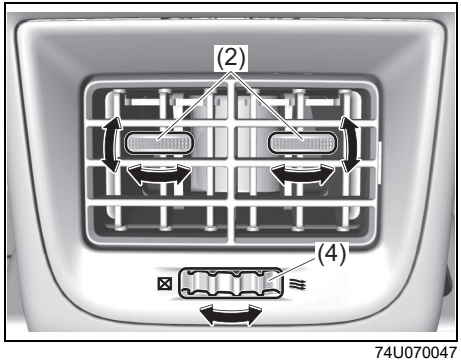

74U070047

When open, air comes out regardless of the air flow selector position. Move the knob (2) vertically or horizontally, to adjust the direction of airflow as desired. The side outlet opens when you turn the dial (3) upward and closes when you turn it downward. The rear outlet opens when you move the dial (4) to the right and closes when you move it to the left.

⚠ CAUTION

Prolonged exposure to hot air from the heater or air conditioner could result in low temperature burns. All vehicle occupants, particularly children, the elderly, those with special needs, individuals with delicate skin, and sleeping individuals, should maintain sufficient distance from the air outlets to prevent prolonged exposure to hot airflow.

NOTE:

- *For side outlet, if the front door windows are fogged, adjust to direct wind from the side outlets towards the front door windows. This will allow you to remove fog more quickly.*
- *The airflow from the rear outlet can be increased by fully moving the center outlet knob (1) to the inner side.*

Manual heating and air conditioning system (with digital control panel) (if equipped)

Description of controls

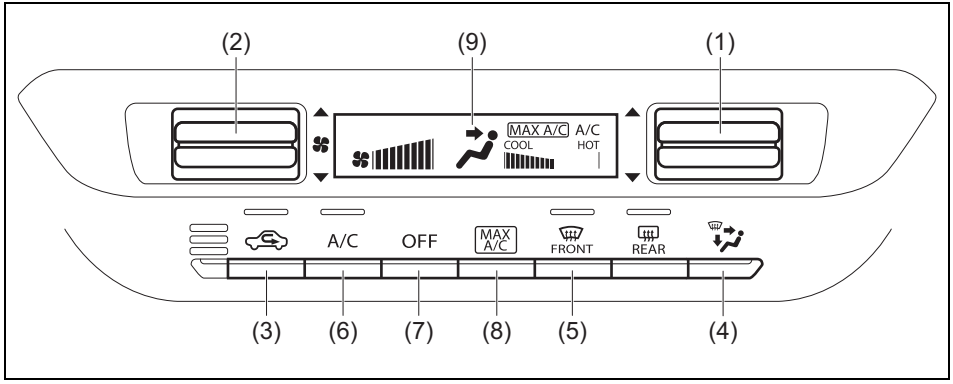

69T070260

(1) Temperature selector
(2) Blower speed selector
(3) Air intake selector
(4) Air flow selector
(5) Defrost switch
(6) Air conditioning switch
(7) “OFF” switch
(8) MAX A/C switch
(9) Display

Temperature selector (1)

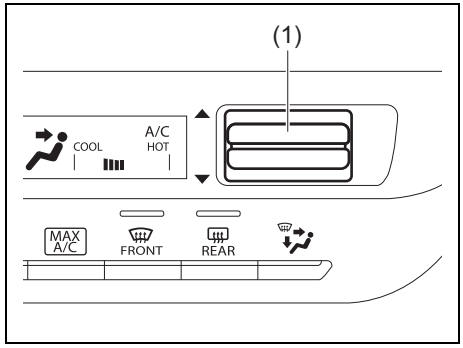

69T070270

Push upper part or lower part of the temperature selector (1) to adjust the temperature.
To down a temperature, push upper part of the temperature selector. To up a temperature, push lower part of the temperature selector.

Blower speed selector (2)

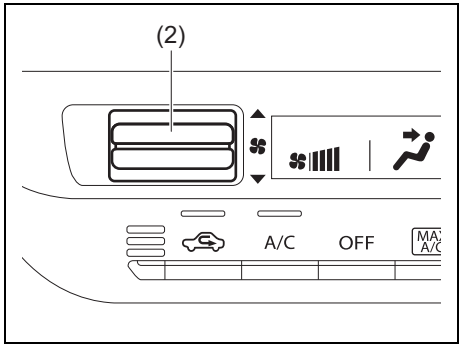

69T070280

The blower speed selector (2) is used to turn on the blower and to select blower speed.
To down the blower speed, push upper part of the blower speed selector. To up the blower speed, push lower part of the blower speed selector.

Air intake selector (3)

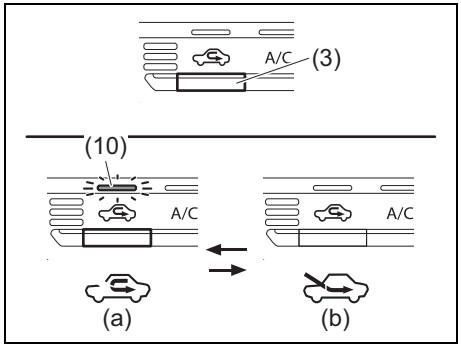

74TBX07046

Push the air intake selector (3) to change between the following modes.

RECIRCULATED AIR (a)
When this mode is selected, inside air is recirculated. At the same time, the indicator light (10) will turn on. This mode is suitable when driving through an area with polluted air such as a tunnel, or when attempting to quickly cool down the vehicle.

FRESH AIR (b)
When this mode is selected, outside air is introduced. At the same time, the indicator light (10) will turn off.

The FRESH AIR (b) and RECIRCULATED AIR (a) are selected alternately each time the air intake selector is pushed.

NOTE:
If you select the RECIRCULATED AIR (a) for an extended period of time, the air in the vehicle can become contaminated. Therefore, you should occasionally select the FRESH AIR (b).

Air flow selector (4)

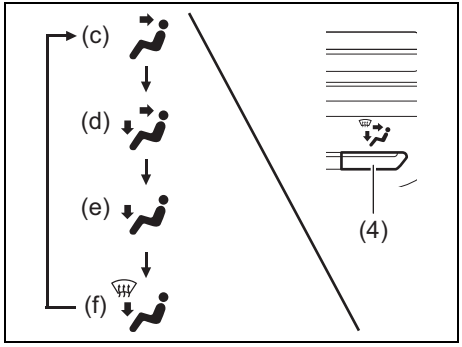

74TBX07047

Push the air flow selector (4) to change among the following functions. The indication of the selected mode appears on the display.

Ventilation (c)

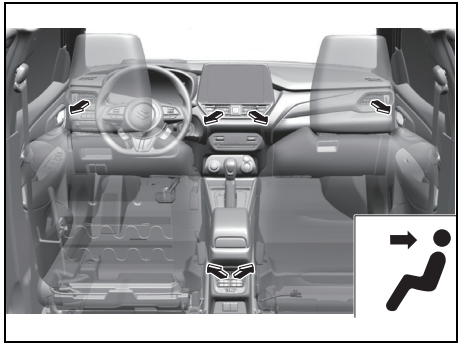

74U070032

Temperature-controlled air comes out of the center, side and rear outlets.

Bi-level (d)

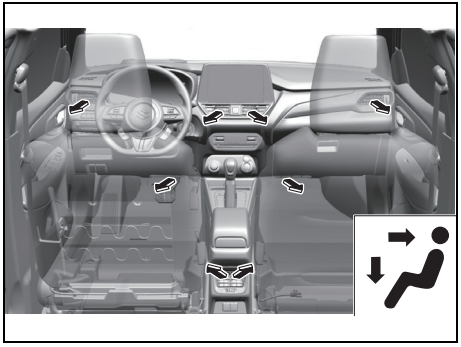

74U070033

Temperature-controlled air comes out of the floor outlets and cooler air comes out of the center, side and rear outlets. When the temperature selector (1) is in the fully cold position or fully hot position, however, the air from the floor outlets and the air from the center, side and rear outlets will be the same temperature.

Heat (e)

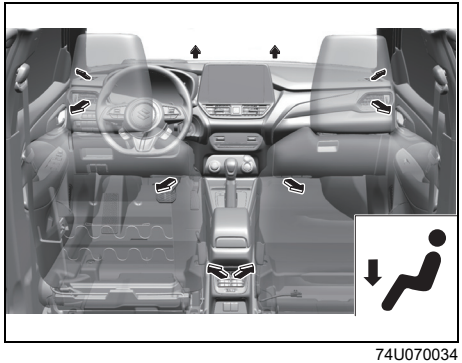

74U070034

Temperature-controlled air comes out of the floor outlets and the side outlets, a small amount of air comes out of the windshield defroster outlets and also comes slightly out of the side defroster and rear outlets.

Heat and defrost (f)

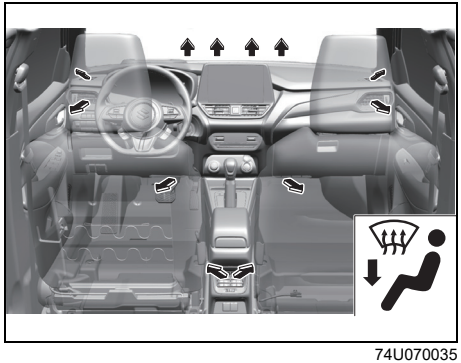

74U070035

Temperature-controlled air comes out of the floor outlets, the windshield defroster outlets, the side defroster outlets and the side outlets and also comes slightly out of the rear outlets.

Defrost switch (5)

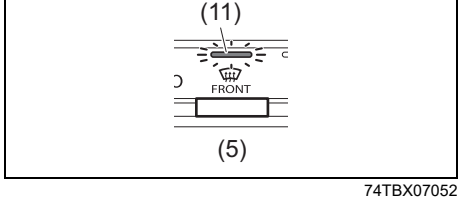

74TBX07052

Push the defrost switch (5) to turn on the defroster. At the same time, the indicator light (11) will turn on.

Defrost

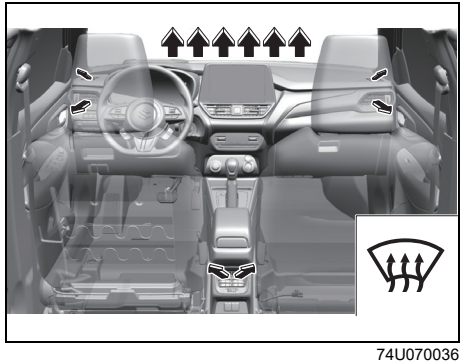

74U070036

Temperature-controlled air comes out of the windshield defroster outlets, the side defroster outlets and the side outlets and also comes slightly out of the rear outlets.

NOTE:

- *When the defrost switch (5) is pushed to turn on the defroster, the air conditioning system will operate and FRESH AIR mode will be selected automatically. In very cold weather, however, the air conditioning system will not operate.*
- *If the air that comes out of the rear outlet is felt uncomfortable, close it using the rear outlet dial.*

Air conditioning switch (6)

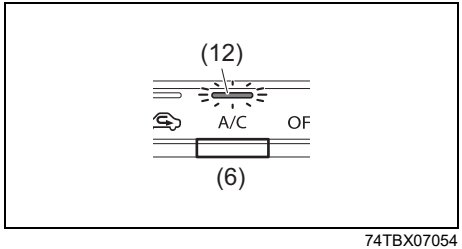

74TBX07054

The air conditioning switch (6) is used to turn on and off the air conditioning system only when the blower is on. Push in the switch to turn on the air conditioning system. At the same time, “A/C” will appear on the display and the indicator light (12) will turn on. Push in the switch again to turn off the air conditioning system. At the same time, “A/C” will go off and the indicator light (12) will turn off.

MAX A/C switch (8)

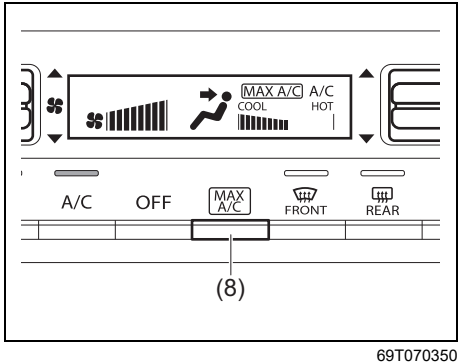

69T070350

Push the MAX A/C switch (8) to cool down the interior at peak efficiency.

NOTE:
When the MAX A/C switch is pushed, “MAX A/C” will appear in the display and the air conditioning system will operate in the following settings automatically.
- *The air conditioner: On*
- *The blower speed: Full speed*
- *The temperature setting level: Maximum cooling*
- *The air flow mode: VENTILATION (c)*
- *The air intake mode: RECIRCULATED AIR (a)*

To return to the current setting, push the MAX A/C switch again.

System operating instructions

To set the air conditioning system, follow the procedure below.
1) Start the engine.
2) Set the desired blower speed by pushing upper part or lower part of the blower speed selector (2).
3) Set the desired temperature by pushing upper part or lower part of the temperature selector (1).

You can use the air conditioning switch (6) to manually turn the air conditioner on or off according to your preference. When you turn the air conditioning switch off, the air conditioning system cannot lower the inside temperature below the outside temperature.

To turn the air conditioning system off, push the “OFF” switch (7).

NOTE:
If the windshield and/or the front door windows are fogged, push the defrost switch (5) to turn on the defroster, or push the air flow selector (4) to change the air flow to heat and defrost position to defog the windows.

Normal cooling
Set the air flow selector (4) to VENTILATION (c), the temperature selector (1) to the desired temperature position and the blower speed selector (2) to the desired blower speed position. Setting the blower

speed selector (2) to a higher blower speed position increases cooling efficiency.

You can switch the air intake selector (3) to either FRESH AIR (b) or RECIRCULATED AIR (a) as you desire. Choosing RECIRCULATED AIR (a) increases cooling efficiency.

Quick cooling (using recirculated air)
The base settings are the same as for normal cooling except you select RECIRCULATED AIR (a) and the highest blower speed.

To cool down the interior at peak efficiency, push the MAX A/C switch (8).

NOTE:
- *If you select RECIRCULATED AIR (a) for an extended period of time, the air in the vehicle may become contaminated and the windows tend to get misted. Therefore, you should select FRESH AIR (b) whenever possible.*
- *If your vehicle has been left in the sun with the windows closed, it will cool faster if you open the windows briefly while you operate the air conditioner with the air intake selector at FRESH AIR (b) and the blower at high speed.*

Dehumidifying
Set the air flow selector (4) to the desired air flow selector position, the temperature selector (1) to the desired temperature position and the blower speed selector (2) to the desired blower speed position. Also select FRESH AIR (b).
NOTE:
Because the air conditioner dehumidifies the air, turning it on will help keep the windows clear.

Maintenance

If you do not use the air conditioner for a long period, such as during winter, it may not give the best performance when you start using it again. To help maintain optimum performance and durability of your air conditioner, it needs to be run periodically. Operate the air conditioner at least once a month for one minute with the engine idling. This circulates the refrigerant and oil and helps protect the internal components.

Your air conditioner is equipped with air filters. Clean or replace them as specified in “Maintenance Schedule” in the “INSPECTION AND MAINTENANCE” section. Have this job done by an authorized SUZUKI dealer or a qualified workshop as the lower glove box must be lowered for this job.

NOTE:
Your vehicle uses the air conditioning refrigerant HFC-134a, commonly called R-134a. R-134a replaced R-12 around 1993 for automotive applications. Other refrigerants are available, including recycled R-12, but only R-134a should be used in your vehicle.

NOTICE

Using the wrong refrigerant may damage your air conditioning system. Use R-134a only. Do not mix or replace the R-134a with other refrigerants.

How to use air conditioning system effectively

If you do not use the air conditioner for a long period

Ensure that the air conditioner is used at least once a month, so as to circulate the refrigerant throughout the air conditioning system. The refrigerant contains the oil necessary for lubricating the system's parts, which contributes to maintaining the air conditioner's performance.

Parking under the blazing sun

After parking for a long time under the blazing sun, the interior temperature can become very high. Use the air conditioning system, with the windows or doors opened to ventilate the interior.

Automatic Heating and Air Conditioning System (Climate Control) (if equipped)

Description of Controls

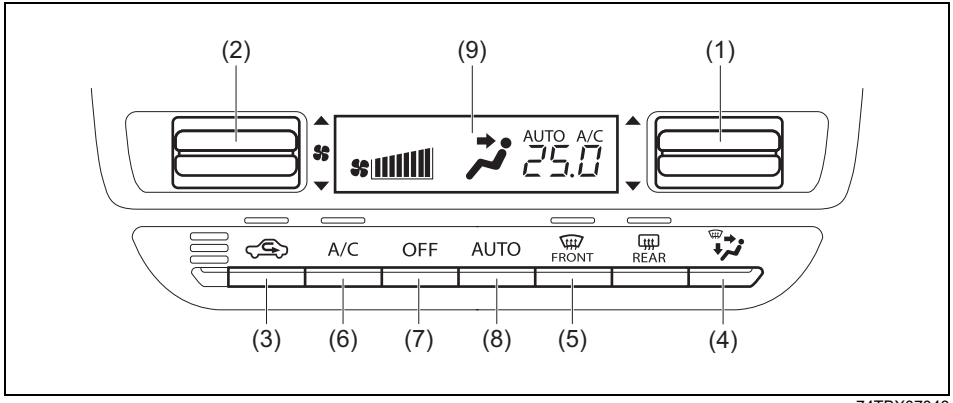

74TBX07043

(1) Temperature selector
(2) Blower speed selector
(3) Air intake selector
(4) Air flow selector
(5) Defrost switch
(6) Air conditioning switch
(7) “OFF” switch
(8) “AUTO” switch
(9) Display

Temperature selector (1)

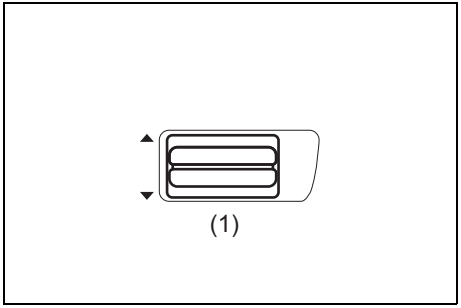

74TBX07044

Push upper part or lower part of the temperature selector (1) to adjust the temperature. The display (9) shows the selected temperature.

NOTE:

- *If you push the temperature selector (1) until “HI” or “LO” appears on the display, the climate control system will operate at maximum heating or cooling. The temperature of the air from the outlets may change suddenly while “LO” or “HI” is displayed, but this is normal.*
- *When you change the unit of temperature in the information display, the unit of temperature in the air conditioning system will be changed. Refer to “Setting Mode” (P.4-29)*

Blower speed selector (2)

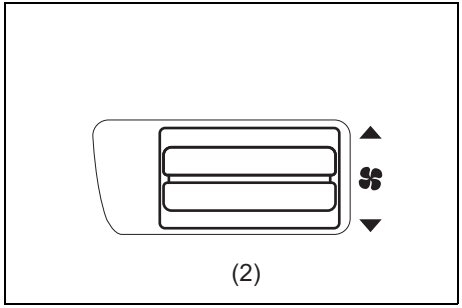

74TBX07045

The blower speed selector (2) is used to turn on the blower and to select blower speed.

If the “AUTO” switch (8) is pushed, the blower speed will vary automatically as the climate control system maintains the selected temperature.

Air intake selector (3)

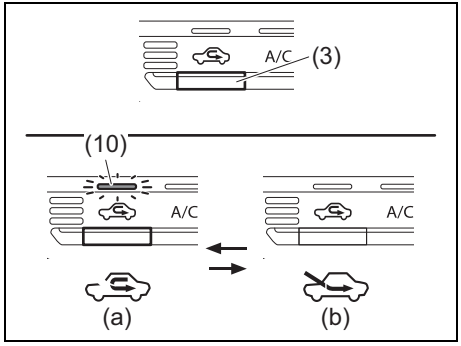

74TBX07046

Push the air intake selector (3) to change between the following modes.

If the “AUTO” switch (8) is pushed, the air intake will vary automatically as the climate control system maintains the selected temperature.

NOTE:
When you select the recirculated air mode, the automatic operation system is deactivated if you push the “AUTO” switch (8).

RECIRCULATED AIR (a)
When this mode is selected, inside air is recirculated. At the same time, the indicator light (10) will turn on. This mode is suitable when driving through an area with polluted air such as a tunnel, or when attempting to quickly cool down the vehicle or to reduce unwanted odor from entering the vehicle.

FRESH AIR (b)
When this mode is selected, outside air is introduced. At the same time, the indicator light (10) will turn off.

The FRESH AIR (b) and RECIRCULATED AIR (a) are selected alternately each time the air intake selector is pushed.

NOTE:
If you select the RECIRCULATED AIR (a) for an extended period of time, the air in the vehicle may become contaminated. Therefore, you should occasionally select the FRESH AIR (b).

Air flow selector (4)

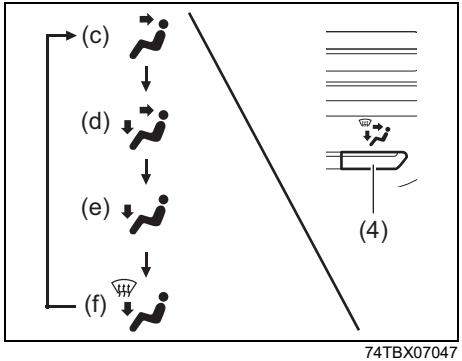

74TBX07047

Push the air flow selector (4) to change among the following functions. The indication of the selected mode appears on the display.

If the “AUTO” switch (8) is pushed, the air flow will vary automatically as the climate control system maintains the selected temperature.

Ventilation (c)

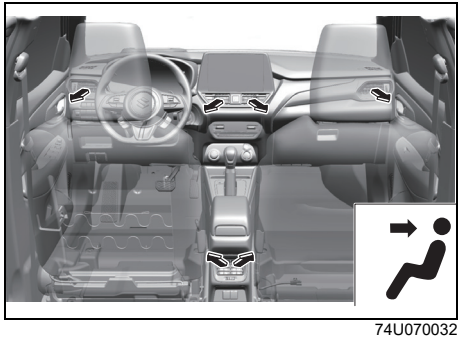

74U070032

Temperature-controlled air comes out of the center, side and rear outlets.

Bi-level (d)

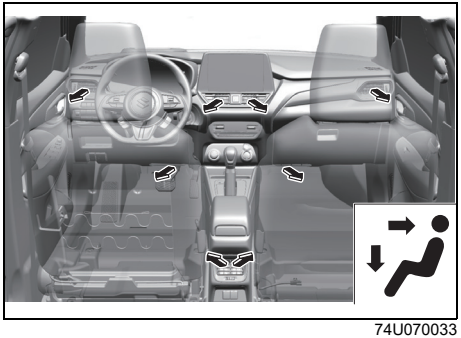

74U070033

Temperature-controlled air comes out of the floor outlets and cooler air comes out of the center, side and rear outlets. When the temperature selector (1) is in the fully cold position or fully hot position, however, the air from the floor outlets and the air from the center, side and rear outlets will be the same temperature.

Heat (e)

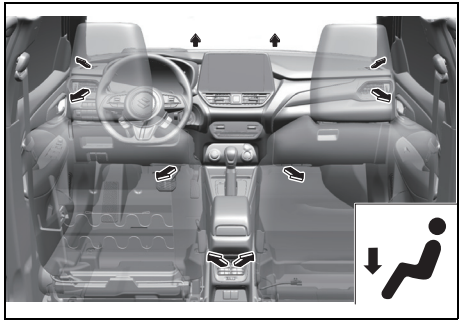

74U070034

Temperature-controlled air comes out of the floor outlets and the side outlets, also comes out of the windshield defroster outlets and also comes slightly out of the side defroster and rear outlets.

Heat and defrost (f)

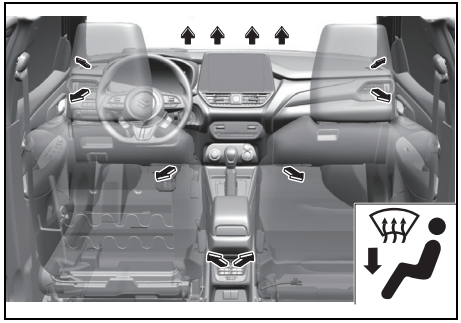

74U070035

Temperature-controlled air comes out of the floor outlets, the windshield defroster outlets, the side defroster outlets and the side outlets and also comes slightly out of the rear outlets.

Defrost switch (5)

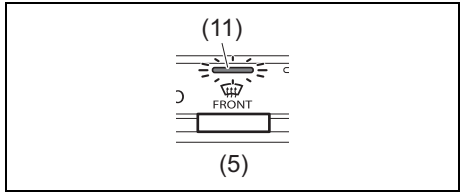

74TBX07052

Push the defrost switch (5) to turn on the defroster. At the same time, the indicator light (11) will turn on.

Defrost

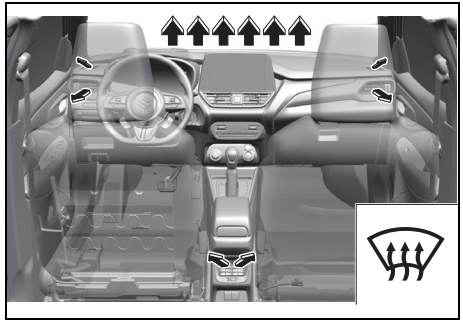

74U070036

Temperature-controlled air comes out of the windshield defroster outlets, the side defroster outlets and the side outlets and also comes slightly out of the rear outlets.

NOTE:
- *When the defrost switch (5) is pushed to turn on the defroster, the air conditioning system will come on and the FRESH AIR (b) will be selected automatically. In very cold weather, however, the air conditioning system will not turn on.*
- *If the air that comes out of the rear outlet is felt uncomfortable, close it using the rear outlet dial.*

Air conditioning switch (6)

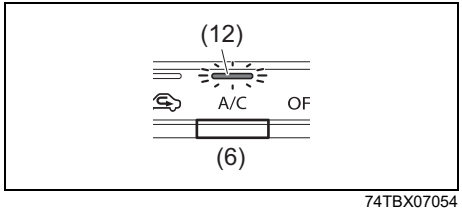

74TBX07054

The air conditioning switch (6) is used to turn on and off the air conditioning system only when the blower is on. Push in the switch to turn on the air conditioning system. At the same time, “A/C” will appear on the display and the indicator light (12) will turn on.
Push in the switch again to turn off the air conditioning system. At the same time, “A/C” will go off and the indicator light (12) will turn off.

Models with idling stop system
When the engine is stopped automatically, the air conditioner switches to the ventilation position (a).

NOTE:
- *If the cooling and heating performance is insufficient when the engine is stopped automatically, push the idling stop system OFF switch to deactivate the idling stop system. (The engine is restarted automatically, and the cooling and heating performance is restored.)*
- *If the windshield and/or front door windows are fogged, push the defrost switch. (When the defrost switch is pushed, the engine is restarted automatically and the defroster is turned on.)*

System Operating Instructions

Automatic operation

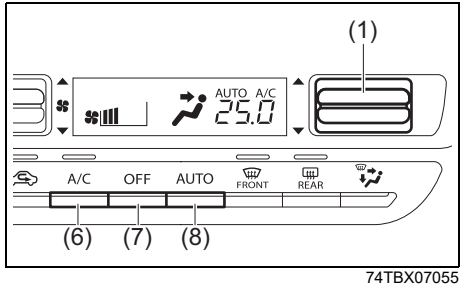

74TBX07055

You can let the climate control system work automatically. To set the system for fully-automatic operation, follow the procedure below.

1) Start the engine.
2) Push the “AUTO” switch (8).
3) Set the desired temperature by pushing the temperature selector (1).
   The blower speed, air intake and air flow are controlled automatically to maintain the set temperature. However, the air flow is not changed to DEFROST position automatically.

NOTE:
When you select the recirculated air mode, the automatic operation system is deactivated if you push the "AUTO" switch (8).

4) Push air conditioning switch (6).
   You can use the air conditioning switch (6) to manually turn the air conditioner on or off according to your preference. When you turn the air conditioning switch off, the climate control system cannot lower the inside temperature below outside temperature.
5) To turn the climate control system off, push "OFF" switch (7).

NOTE:
- *If "AUTO" in the display blinks, there is a problem in the heating system and/or air conditioning system. You should have the system inspected by an authorized SUZUKI dealer or a qualified workshop.*
- *To find the temperature at which you are most comfortable, start with the 22°C (72°F) or 25°C (77°F) setting. (the temperature vary depending on vehicle specifications.).*
- *If you turn the temperature selector (1) until "HI" or "LO" appears on the display, the climate control system will operate at maximum heating or cooling and the blower will run at full speed.*
- *To avoid blowing cold air in cold weather or hot air in hot weather, the system will delay turning on the blower until warmed or cooled air is available.*
- *If your vehicle has been left in the sun with the windows closed, it will cool faster if you open the windows briefly.*
- *Even under the automatic operation, you can set individual selectors to the manual mode. The manually selected functions are maintained, and the other functions remain under automatic operation.*
- *If the windshield and/or the front door windows are fogged, push the defrost switch (5) to turn on the defroster, or push the air flow selector (4) to change the air flow to heat and defrost position to defog the windows.*
- *To return the blower speed selector (2) and air flow selector (4) to automatic operation, push "AUTO" switch (8).*

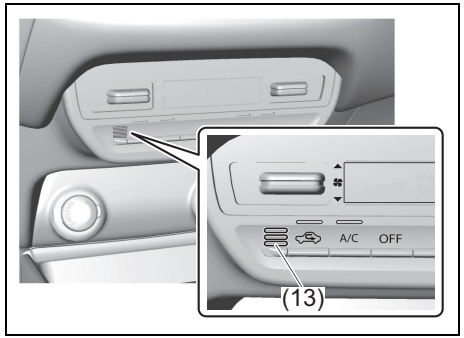

74TBX07056

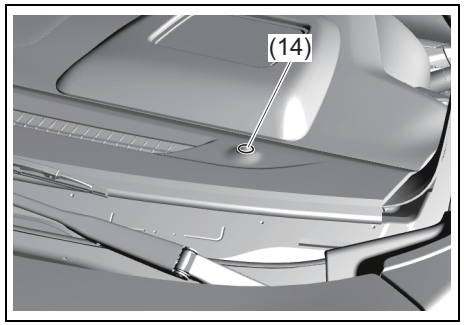

74U070020

Be careful not to cover the interior temperature sensor (13) located on the climate control panel, or the solar sensor (14) located at the top of the driver's side dashboard. These sensors are used by the automatic system to regulate temperature.

Manual Operation
You can manually control the climate control system. Set the selectors to the desired positions.

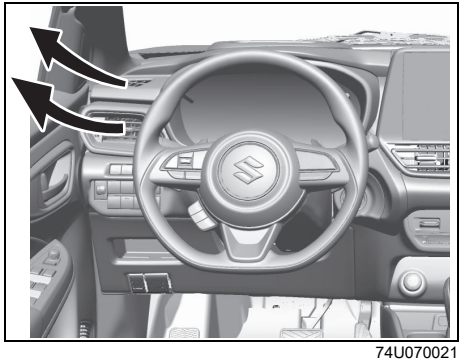

74U070021

NOTE:
If you need maximum defrosting, take the following procedure:

1) *Push the defrost switch (5) to turn on the defroster (the air conditioning system will come on and the FRESH AIR (b) will be selected automatically).*
2) *Set the blower speed selector to HIGH.*
3) *Adjust the temperature selector to the "HI" indication on the display.*
4) *Adjust the side outlets so the air blows on the side windows.*

- *If the heating performance can no longer perform at a sufficient level due to automatically stopping the engine, press the ENG A-STOP OFF switch to deactivate the ENG A-STOP system. (The engine will automatically restart and the air conditioning performance will be restored.)*
- *If the windshield and/or the driver's side/passenger side door windows are fogged during automatically stopping the engine, stop the ENG A-STOP system and restart the engine. Then, push the air flow selector (4) to change the air flow to the HEAT & DEFROST or DEFROST position to defog the windows.*

Maintenance

If you do not use the air conditioner for a long period, such as during winter, it may not give the best performance when you start using it again. To help maintain optimum performance and durability of your air conditioner, it needs to be run periodically. Operate the air conditioner at least once a month for one minute with the engine idling. This circulates the refrigerant and oil and helps protect the internal components.

Your air conditioner is equipped with air filters. Clean or replace them as specified in "Maintenance Schedule" in the "INSPECTION AND MAINTENANCE" section. Have this job done by an authorized SUZUKI dealer or a qualified workshop as the lower glove box must be lowered for this job.

NOTE:
Your vehicle uses the air conditioning refrigerant HFC-134a, commonly called R-134a. R-134a replaced R-12 around 1993 for automotive applications. Other refrigerants are available, including recycled R-12, but only R-134a should be used in your vehicle.

NOTICE
Using the wrong refrigerant may damage your air conditioning system. Use R-134a only. Do not mix or replace the R-134a with other refrigerants.

How to Use Air Conditioning System Effectively

Parking under the blazing sun
After parking for a long time under the blazing sun, the interior temperature can become very high. Use the air conditioning system, with the windows or doors opened to ventilate the interior.

Radio Antenna

Removal and Installation

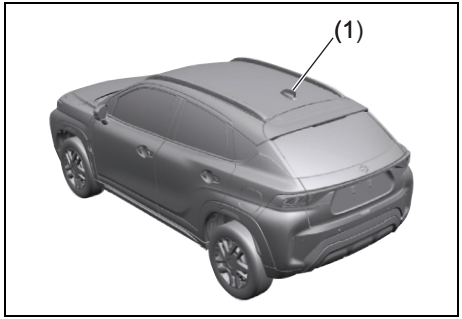

74TBX07059

(1) Radio antenna

Installation of Radio frequency Transmitters

We recommend that you always ask an authorized SUZUKI dealer or a qualified workshop about frequency band, max output power, antenna position at vehicle and specific conditions for installation and/or use before installing a radio transmitter in your vehicle. Such equipments may cause the electronic control system to malfunction if they are incorrectly installed or they are not suited for the vehicle.

NOTICE

Improper installation of mobile communication equipment such as cellular telephones, CB (Citizen's Band) radios or any other wireless transmitters may cause electronic interference with your vehicle's ignition system or any other electrical systems resulting in vehicle performance problems. Consult an authorized SUZUKI dealer or a qualified workshop for advice.

Audio Function

When Using Audio System with Appropriate Volume not to Disturb Safe Driving

- When playing music or other audio, if a mobile phone is used inside or nearby the vehicle, noise may be heard from the speakers. This does not indicate a malfunction.
- Navigation and audio equipment may not function properly if they are interfered with unauthorized radio waves.
- For further information about the features of the navigation or audio equipment, refer to the instruction manuals.

⚠ WARNING

If you operate the navigation or audio equipment, you may be distracted by them, resulting in an accident.
Do not operate the navigation or audio equipment while driving.

NOTICE

While the engine is stopped, using the navigation or audio equipment for a long period of time may cause the lead-acid battery to run out.
Do not use the navigation or audio equipment for a long period of time while the engine is stopped.

NOTE:
Due to poor quality of FM/AM signal, some disturbance/noise may be heard from speakers. It is recommended to switch off the tuner system to prevent the said disturbance/noise in the speaker.

Remote Audio Controls

Controlling basic functions of the audio system is available using the switches on the steering wheel.
The remote audio switches are available when the engine switch is in ACC or ON mode.

- For operation of an audio system or a navigation system, refer to the supplementary manual, provided along with it.
- The operating procedure may be different depending on an audio system or a navigation system.

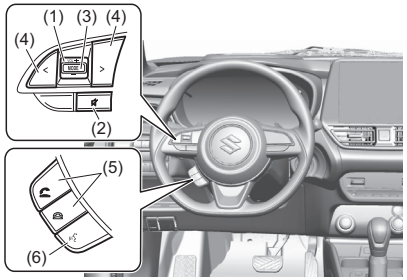

74U070022

(1) Volume switch
(2) Mute switch
(3) “MODE” switch
(4) Select switch
(5) Hands-free switch
(6) Voice recognition switch

Volume Switch (1)

You can adjust volume with this switch.

- To increase the volume, press “+” side.
- To decrease the volume, press “–” side.
- The volume will continue to increase or decrease until this switch is released.

Mute Switch (2)

To mute this sound, press the switch (2).

“MODE” Switch (3)

Every time you press this switch, the audio modes such as radio, etc. will be switched in order.
Depending on a navigation system or an audio systems, you can turn on the system by pressing this switch, even when the equipment itself is turned off.

Select Switch (4)

Every time you press this switch, you can select broadcast station or music according to your preference, along with the currently selected mode.

Hands-free Switch (5)

You can use this switch for the equipment which has the hands-free function. To use the function, you need to set up for the equipment. Refer to the supplementary manual for details.

Voice Recognition Switch (6)*

You can use this switch for the equipment which has the voice recognition function. To use the function, you need to set up for the equipment. Refer to the supplementary manual for details.

*: When using Apple CarPlay® or Android Auto™ on infotainment system

Apple CarPlay® may not be available in your country or region.
For details about Apple CarPlay, visit the following site:
http://www.apple.com/ios/carplay

Android Auto™ may not be available in your country or region.
For details about Android Auto, please refer to the Google support site:
http://support.google.com/androidauto

Roof Rails

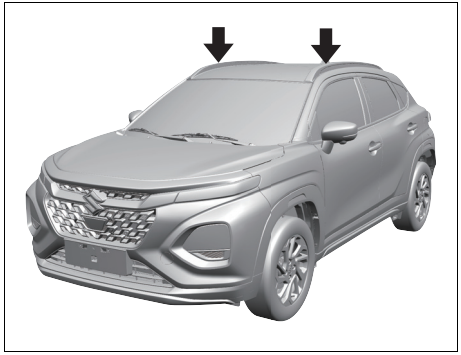

74U070037

NOTICE
Do not load cargo on roof. The roof garnish is not intended for load carriage and it is for aesthetics only.

Wireless Charger (if equipped)

Smart phone equipped with wireless charging function, can be charged by placing it on the charging area, provided the device is Qi certified as per Wireless Power Consortium. Wireless Charger can support only one smart phone at a time. The Wireless Charger cannot be used with a smart phone that is larger than the charging area. Additionally, depending on the smart phone, the Wireless Charger may not operate properly. Refer to the operation manual of the smart phone.

Wireless charger uses inductive charging technology to charge the smart phones. Inductive charging system are less efficient than conventional charging through cable. As a result, user may experience higher device temperature during charging.

The “Qi” Symbol

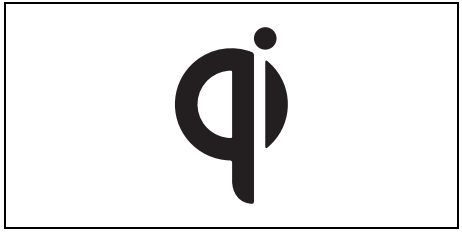

74TBX07062

The “Qi” symbol is a trademark of the Wireless Power Consortium.

1) Wireless charger
2) Indicator light



74U070023

⚠ WARNING

Caution while driving
- **When charging a smart phone while driving, for safety reasons, the driver should not operate the portable device.**

Caution regarding interference with Electronic Devices
- **People with implantable cardiac pacemakers, cardiac resynchronization therapy pacemakers or implantable cardioverter defibrillators, as well as any other electrical medical device, should consult their physician about the usage of the Wireless Charger. Operations of the Wireless Charger may have an affect on medical devices.**

(Continued)

⚠ WARNING

(Continued)

To prevent damage or burns
- **Observe the following precautions. Failure to do so may result in the possibility of fire, equipment failure or damage, or burns due to heat.**
- **Do not put any metallic objects between the charging area and the portable device while charging. Do not attach metallic objects, such as aluminum stickers, to the charging area.**
- **Do not cover the Wireless Charger with a cloth or other object while charging.**
- **Do not attempt to charge portable devices which are not compatible with the Qi wireless charging standard.**
- **Do not disassemble, modify or remove the Wireless Charger.**
- **Do not apply force or impact to the Wireless Charger.**
- **Do not spill liquid such as water, drinks, etc. over the Wireless Charger or the smart phone.**

⚠ CAUTION

Phones which are having magnetic array (for alignment / to fix with chargers) may have different charging performance / may get heat up depending upon the type of phones.

NOTICE

Conditions in which the Wireless Charger may not operate correctly
In the following situations, the wireless charger may not operate correctly:

- **When a smart phone is fully charged.**
- **When there is a foreign object such as metal objects between the charging area and a smart phone.**
- **When dust and other debris are on the charging pad.**
- **When a smart phone becomes hot while charging.**
- **When a smart phone is placed on the wireless area with its charging surface facing up.**
- **When a smart phone is not centered on the charging area.**
- **When the vehicle is near a TV tower, electric power plant, gas station, radio station, large display, air-port or other facility that generates strong radio waves or electrical noise.**

(Continued)

NOTICE

(Continued)

- **When the smart phone is in contact with, or is covered by any of the following metallic objects:**
  - Any object such as cards, cigarette boxes etc. that contains aluminum foil
  - Metallic wallets or bags
  - Coins
  - Metal hand warmers
  - Media such as CDs and DVDs
- **When wireless keys (that emit radio waves) other than those of your vehicle are being used nearby.**
- **Vehicle Smart Key FOB operation might be impacted due to wireless charging function. Keep the Key FOB away from the Wireless Charger to avoid situation where vehicle is unable to detect the Key FOB.**
- **If in situations other than above the Wireless Charger does not operate properly Wireless Charger may be malfunctioning. In this case, please refer Error/Malfunction table.**

(Continued)

NOTICE

(Continued)
To prevent failure or damage to data
Do not bring magnetic cards, such as a credit card, or magnetic recording media, close to the wire- less charger while charging. Otherwise, data may be erased due to the influence of magnetism.
Additionally, do not bring precision instruments such as wrist watches, close to the Wireless Charger, as such objects may malfunction.
To prevent vehicle battery discharge
Do not use the Wireless Charger for a long period of time, with engine stopped. Prolong charging may impact the vehicle battery health.

Using the Wireless Charger

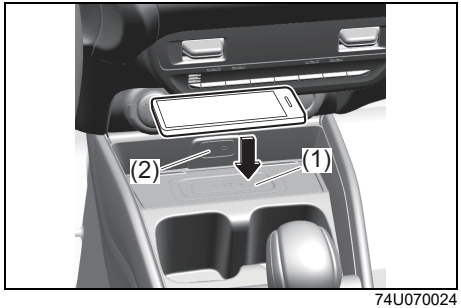

74U070024

This wireless charger is Qi version 1.2.4 certified.To check the Qi version of your smartphone, please refer to the official Product List on the Wireless Power Consortium website.
To start wireless charging, place a Smart phone equipped with wireless charging function at the center of Wireless Charger. Firmly close all the doors and press the engine switch to change the ignition mode to ON or ACC. If the ignition mode is LOCK (OFF), wireless charging is not possible.

Place a Smart phone on the Wireless Charger (1) with its charging surface facing down.

While charging, the indicator light (2) (blue) will be illuminated.

If charging does not begin, place the smart phone at the center of the charging area.

When charging is complete, the operation indicator light (2) (green) will illuminate.

NOTE:
- *You can choose to turn the wireless charging function ON or OFF in the user settings mode on the Infotainment/Head Unit. For more details, refer to the manual of the Infotainment/Head Unit.*
- *Charging might take few seconds to initiate depending on a portable device or a smart phone.*
- *If a certain amount of time has elapsed since charging completed and the portable device has not been moved, the wireless charger will restart charging.*
- *If the portable device is moved within the charging area, charging will stop temporarily and then restart.*
- *Non compatible/Non Qi certified smart phones may generate FOD/error alerts*
- *The charging performance may vary or phone may get heated up depending upon the type of phone and its specifications.*
- *The surface of the portable device or smart phone may slightly heat up during charging process which is normal.*

Wireless charger indicator light status

Indicator light*	Description
Off	Wireless Charger OFF
Amber	Wireless Charger activated and ready to charge
Blue	Charging in progress
Green**	Charging completed

*: Indicator light intensity may vary depending on the vehicle/ weather condition.
**: Depending on the smart phone, the indicator light may not turn green even after charging completion.

Error / malfunction status

Indicator light	Description**	Measure
Red blinking	Presence of any foreign object (metallic object) or the mobile is displaced from the charging area.	Remove the foreign object including phone cover (having metallic content) Align the phone at the center.
	Smart phone temperature is too high.	Turn off the Wireless Charger, remove the phone and wait for some time for get it cool.
	Wireless Charger temperature is too high.	Turn off the Wireless Charger and wait for some time for get it cool.
	Wireless Charger is not able to communicate with the vehicle	Contact your nearest authorized SUZUKI dealer or a qualified workshop if error persists.
Red continuous	1) Non compatible device/ an object having high metallic content placed on Wireless Charger 2) Non-recoverable failure might have occurred.	1) Remove the object or device and restart the vehicle. 2) Contact your nearest authorized SUZUKI dealer or a qualified workshop if error persists.

**: Go to Wireless Charger screen in the Infotainment screen to see the details of error / malfunction.

NOTE:
- *If there is communication loss between Infotainment System & Wireless Charger, Wireless Charger screen may not be visible. In this case contact your nearest authorized SUZUKI dealer or a qualified workshop. Indicator Unit may indicate Red Blinking/Red Continuous alert based on the communication between the Smart phone and Wireless Charger.*
- *Indicator Unit may indicate Red Blinking/ Red Continuous alert based on the communication between the Smart phone and Wireless Charger.*

The wireless Charger can be operated when
The vehicle is in ACC ON mode.

Smart phones that can be charged
Smart phones compatible with the Qi wireless charging standard can be charged by the Wireless Charger. How-ever, compatibility with all devices which meet the Qi wireless charging standard is not guaranteed.

If a cover or accessory is attached to the Smart phone
Do not charge a Smart phone if a cover or accessory which is not Qi compatible is attached. Depending on the type of cover and/or accessory attached (e.g. if a cover is very thick or has metal ring attached to the cover), it may not be possible to charge the Smart phone. If the Smart phone is placed on the charging area and does not charge, remove the cover and/or accessories.

If interference is heard in AM radio broadcasts while charging
Some noise may be heard while using the Wireless Charger.

The wireless charging function gets interrupted when any of the following condition is encountered
- Vehicle is in ACC off mode.
- When vehicle battery is too low.
- When the engine switch / the power switch is pressed or the brake / the clutch is pressed during cranking of the vehicle. Charging will be reinitiated once the vehicle is successfully cranked or the brake / the clutch is released.
- If in situation other than the above, Wireless Charger will not operate till the key search event is happening.
- Depending on the vehicle drive mode condition, charging might be impacted.
- When any of the vehicle door (including the tailgate) is opened or the Key Fob is taken out of the vehicle. Charging will be initiated once all doors are closed and the Key Fob is inside the vehicle.
- The Wireless Charger is turned off in the user settings screen on the Infotainment.
- When temperature increases abnormally inside the wireless Charger or the smart phone gets overheated.
- When interior temperature of Wireless Charger goes beyond the set temperature, charging will stop. Once the temperature comes within the operating range, charging function will resume.
- When the smart phone is displaced during vehicle running condition, charging may be impacted.
- The vehicle is parked at a place where there is strong electromagnetic waves or noises such as FM/AM station, TV station, electric power plant etc.
- For certain smart phones, wireless charging speed may vary and charging may stop due to their own protection mechanisms defined by smart phone manufacturer.
- For certain smart phones charging stop alert may be displayed depending on smart phone manufacturer and it should not be considered as a malfunction of the Wireless Charger
- User may face intermittent /No charging issue based on the smart phone size/ position and it should not be considered as malfunction of the Wireless Charger.
- Forceful insertion of smart phone may damage the Wireless Charger.

When the smart phone placed on Wireless Charger is connected to USB cable
It charges by means as defined by the smart phone manufacturer. Based on the above indicator LED status will get change and user may get different Malfunction/ Error alerts

Cleaning the wireless charger

⚠ WARNING

Do not let the Wireless Charger get wet. Failure to do so may cause the charger to become hot and cause burns or could cause electric shock resulting in death or serious injury.

- Do not use oil, grease, alcohol, benzine or thinner for cleaning the charging pad.
- Do not cover the charging pad with tow els, clothing, or other objects while charging etc.
- Do not spray aerosols which may come in contact with the charging pad surface.

MEMO

VEHICLE LOADING AND TOWING

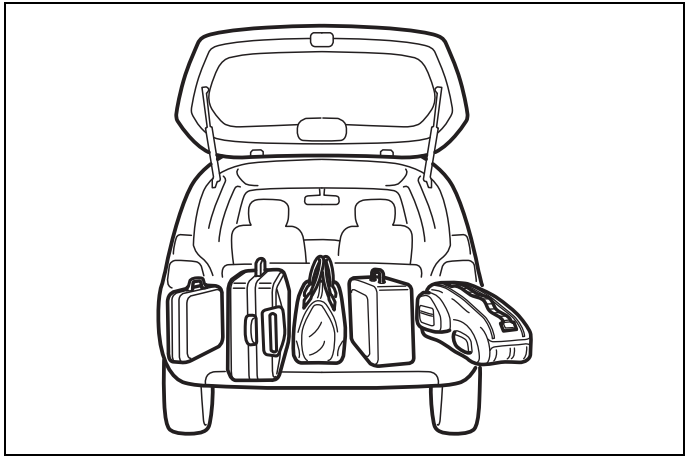

54G215

Vehicle Loading 8-1

Vehicle Loading

Your vehicle was designed for specific weight capacities. The weight capacities of your vehicle are indicated by the Gross Vehicle Weight Rating (GVWR) and the Permissible maximum Axle Weight (PAW, front and rear). The GVWR and PAW (front and rear) are listed in the “SPECIFICATIONS” section.

GVWR – Maximum permissible overall weight of the fully loaded vehicle (including all the occupants, accessories and cargo.)
PAW – (Front and Rear) Maximum permissible weight on an individual axle.

Actual weight of the loaded vehicle and actual loads at the front and rear axles can only be determined by weighing the vehicle. Compare these weights to the GVWR and PAW (front and rear). If the gross vehicle weight or the load on either axle exceeds these ratings, you must remove enough weight to bring the load down to the rated capacity.

⚠ WARNING

- **Never overload your vehicle. The gross vehicle weight (sum of the weights of the vehicle, all the occupants, accessories and cargo) must never exceed the Gross Vehicle Weight Rating (GVWR). In addition, never distribute a load so that the weight on either the front or rear axle exceeds the Permissible maximum Axle Weight (PAW).**
- **Always distribute cargo evenly. To avoid personal injury or damage to your vehicle, always secure cargo to prevent it from shifting if the vehicle moves suddenly. Place heavier objects on the floor and as far forward in the cargo area as possible. Never pile cargo higher than the top of the seat backs.**

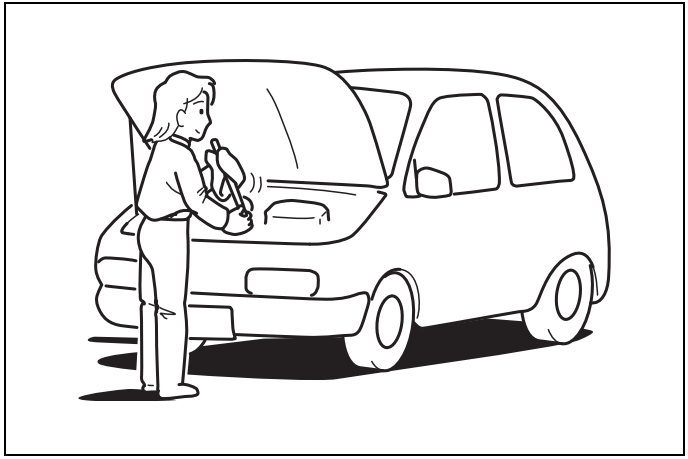

60G410

INSPECTION AND MAINTENANCE

Maintenance Schedule 9-2
Periodic Maintenance Schedule 9-2
Maintenance Recommended Under Severe Driving Conditions 9-6
Drive Belt 9-11
Engine Oil and Filter 9-11
Engine Coolant 9-13
Air Cleaner 9-14
Spark Plugs 9-15
Automatic Transmission (AT) Fluid (if equipped) 9-15
Brakes 9-17
Steering Wheel 9-20
Tyres 9-20
Battery 9-23
Fuses 9-26
Headlight Aiming 9-29
Bulb Replacement 9-30
Wiper Blades 9-34
Windshield Washer Fluid 9-36
Air Conditioning System 9-37
Preparation Before Winter Season 9-38

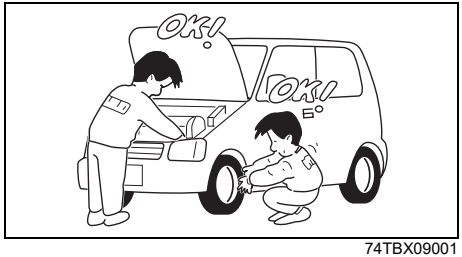

74TBX09001

⚠ WARNING

Take extreme care when working on your vehicle to prevent accidental injury. Carefully observe the following precautions:

- **To prevent damage or unintended activation of the airbag system or seat belt pretensioner system, check that the lead-acid battery is disconnected and the ignition switch has been in "LOCK" position or the ignition mode has been in LOCK (OFF) position for at least 90 seconds before performing any electrical service work on your SUZUKI vehicle. Do not touch airbag system components, seat belt pretensioner system components or wires.**
  The wires are wrapped with yellow tape or yellow tubing, and the couplers are yellow for easy identification.
- **Do not leave the engine running in garages or other confined areas.**

(Continued)

⚠ WARNING

(Continued)

- **When the engine is running, keep hands, clothing, tools, and other objects away from the fan and drive belt. Even though the fan may not be moving, it can automatically turn on without warning.**
- **When it is necessary to perform service work with the engine running, check that the parking brake is set fully and the transmission is in Neutral.**
- **Do not touch ignition wires or other ignition system parts when starting the engine or when the engine is running, or you could receive an electric shock.**
- **Be careful not to touch a hot engine, exhaust manifold and pipes, muffler, radiator and water hoses.**
- **Do not allow smoking, sparks, or flames around fuel or the battery. Flammable fumes are present.**

(Continued)

⚠ WARNING

(Continued)

- **Do not get under your vehicle if it is supported only with the portable jack provided in your vehicle.**
- **Be careful not to cause accidental short circuits between the positive and negative battery terminals.**
- **Keep used oil, coolant, and other fluids away from children and pets. Dispose of used fluids properly; never pour them on the ground, into sewers, etc.**

Maintenance Schedule

The following table shows the times when you should perform regular maintenance on your vehicle. This table shows in miles, kilometers and months when you should perform inspections, adjustments, lubrication and other services. These intervals should be shortened if driving is usually done under severe conditions (refer to "Maintenance Recommended Under Severe Driving Conditions").

⚠ WARNING

SUZUKI recommends that maintenance on items marked with an asterisk (*) be performed by an authorized SUZUKI dealer or a qualified service technician. If you are qualified, you may perform maintenance on the unmarked items by referring to the instructions in this section. If you are not sure whether you can successfully complete any of the unmarked maintenance jobs, ask an authorized SUZUKI dealer to do the maintenance for you.

Periodic Maintenance Schedule

NOTICE

Whenever it becomes necessary to replace parts on your vehicle, it is recommended that you use genuine SUZUKI replacement parts or their equivalent.

"R": Replace or Change
"I": Inspect, clean, adjust, lubricate or replace as necessary

NOTE:
- *Class1: K15B engine*
- *Class2: K15C engine*
- *This table shows the service schedule up to 100,000 km. Beyond 100,000 km, perform the same services at the same intervals shown in the chart.*

INSPECTION AND MAINTENANCE

Interval: This interval should be judged by odometer reading or months, whichever comes first.		km (x1000)	1	10	20	30	40	50	60	70	80	90	100
		months	1	6	12	18	24	30	36	42	48	54	60
ENGINE													
*1-1. Belt Belt tension check Adjustment, *Replacement		(Class 1)	I	I	I	I	I	I	I	I	I	I	R
		(Class 2)	I	I	I	I	R	I	I	I	R	I	I
1-2. Air conditioning belt (compressor)			–	I	I	I	I	I	I	I	I	I	R
*1-3. Valve clearance		(Class 1)(#1)	–	–	–	I	–	–	I	–	–	I	–
1-4. Engine oil and engine oil filter			I	R	R	R	R	R	R	R	R	R	R
1-5. Engine coolant			–	–	–	–	R	–	–	–	–	–	R
*1-6. Exhaust system (except catalyst)			–	–	–	I	–	–	I	–	–	I	–
IGNITION													
2-1. Iridium plug (Class 2)			Replace every 100,000 km or 60 months.										
Nickel plug (Class 1)			–	–	–	–	R	–	–	–	R	–	–
FUEL													
3-1. Air cleaner filter element	Paved-road		I	I	I	I	R	I	I	I	R	I	I
	Dusty condition		Refer to “Severe driving condition” schedule.										
*3-2. Fuel lines			–	–	–	I	–	–	I	–	–	I	–

#1: Valve clearance for K15C engine model is not required for maintenance.

Interval: This interval should be judged by odometer reading or months, whichever comes first.	km (x1000)	1	10	20	30	40	50	60	70	80	90	100
	months	1	6	12	18	24	30	36	42	48	54	60
*3-3. Fuel filter		–	–	–	–	–	–	–	–	–	–	I
*3-4. Fuel tank		–	–	–	–	I	–	–	–	I	–	–
EMISSION CONTROL SYSTEM												
*4-1. PCV Valve		–	–	–	–	–	–	–	–	–	I	–
*4-2. Fuel evaporative emission control system		–	–	–	–	–	–	–	–	–	I	–
BRAKE												
*5-1. Brake discs and pads (front)		I	I	I	I	I	I	I	I	I	I	I
Brake drums and shoes (rear)		I	I	I	I	I	I	I	I	I	I	I
*5-2. Brake pipes and lines		–	–	–	I	–	–	I	–	–	I	–
*5-3. Brake pedal/Brake lining		I	I	I	I	I	I	I	I	I	I	I
*5-4. Brake fluid check, (#2)		–	I	I	I	R	I	I	I	R	I	I
5-5. Parking brake lever and cable check, *Adjustment (20,000 km for first time only)		–	–	I	–	–	–	–	–	–	–	–
CHASSIS AND BODY												
6-1. Tyres/Wheels		I	I	I	I	I	I	I	I	I	I	I
*6-2. Wheel bearings		–	–	–	–	I	–	–	–	I	–	I
*6-3. Drive axle boots		–	–	–	–	I	–	–	–	I	–	I
*6-4. Suspension system		–	–	I	–	I	–	I	–	I	–	I

Interval: This interval should be judged by odometer reading or months, whichever comes first.		km (x1000)	1	10	20	30	40	50	60	70	80	90	100
		months	1	6	12	18	24	30	36	42	48	54	60
*6-5. Steering system			–	–	I	–	I	–	I	–	I	–	I
6-6. Automatic transmission fluid	Fluid leak check (Class 2)		–	–	–	I	–	–	I	–	–	I	–
	Fluid level (Class 1)		–	I	I	I	I	I	I	I	I	I	I
*	Fluid change (Class 1)		Replace every 165,000 km.										
*	Fluid hose		–	–	–	–	–	I	–	–	–	–	I
6-7. All latches, hinges and locks			–	–	I	–	I	–	I	–	I	–	I
*6-8. Air conditioner filter element*2			–	–	I	–	R	–	I	I	R	–	I

*2: Clean more frequently if the air flow from the air conditioner decreases.

⚠ WARNING

The shock absorbers are filled with high pressure gas. Never attempt to disassemble them or throw them into a fire. Avoid storing them near a heater or heating device. When scrapping the absorber, the gas must be released from the absorber safely. Ask your dealer for assistance.

Maintenance Recommended Under Severe Driving Conditions

Follow this schedule if your vehicle is mainly operated under one or more of the following conditions:
- When most trips are less than 6 km (4 miles).
- When most trips are less than 16 km (10 miles) and outside temperature remains below freezing.
- Idling and/or low-speed operation in stop-and-go traffic.
- Operating in extremely cold weather and/or on salted roads.
- Operating in rough and/or muddy areas.
- Operating in dusty areas.
- Repeated high speed drive or high engine revolutions.
- Towing a trailer, if admitted.

Schedule should also be followed if the vehicle is used for delivery service, police, taxi or other commercial applications.

NOTE:
- *Class 1: K15B engine*
- *Class 2: K15C engine*

Interval: This interval should be judged by odometer reading or months, whichever comes first.		km (x1000)	1	10	20	30	40	50	60	70	80	90	100
		months	1	6	12	18	24	30	36	42	48	54	60
ENGINE													
*1-1. Belt		(Class 1)	I	I	I	I	I	I	I	I	I	I	R
Belt tension check. Adjustment, *Replacement		(Class 2)	I	I	I	I	R	I	I	I	R	I	I
1-2. Air conditioning belt (compressor)			–	I	I	I	I	I	I	I	I	I	R
*1-3. Valve clearance		(Class 1)(#1)	–	–	–	I	–	–	I	–	–	I	–
1-4. Engine oil and engine oil filter			I	R	R	R	R	R	R	R	R	R	R
1-5. Engine coolant			–	–	–	–	R	–	–	–	–	–	R
*1-6. Exhaust system (except catalyst)			–	–	–	I	–	–	I	–	–	I	–
IGNITION													
2-1. Iridium plug (Class 2)			–	–	–	–	R	–	–	–	R	–	–
Nickel plug (Class 1)			Replace every 10,000 km (or 6 months).										
FUEL													
3-1. Air cleaner filter element	Paved-road		Inspect every 10,000 km.										
	Dusty condition		Replace every 30,000 km.										
*3-2. Fuel lines			–	–	–	I	–	–	I	–	–	I	–
*3-3. Fuel filter			–	–	–	–	–	–	–	–	–	–	I
*3-4. Fuel tank			–	–	–	–	I	–	–	–	I	–	–

Interval: This interval should be judged by odometer reading or months, whichever comes first.	km (x1000)	1	10	20	30	40	50	60	70	80	90	100
	months	1	6	12	18	24	30	36	42	48	54	60
EMISSION CONTROL SYSTEM												
*4-1. PCV Valve		–	–	–	–	–	–	–	–	–	I	–
*4-2. Fuel evaporative emission control system		–	–	–	–	–	–	–	–	–	I	–

*1 Inspect more frequently if the vehicle is used under dusty conditions.
#1: Valve clearance for K15C engine model is not required for maintenance.

NOTE:
This table shows the service schedule up to 100,000 km Beyond 100,000 km, perform the same services at the same intervals shown in the chart.

Interval: This interval should be judged by odometer reading or months, whichever comes first.	km (x1000)	1	10	20	30	40	50	60	70	80	90	100
	months	1	6	12	18	24	30	36	42	48	54	60
BRAKE												
*5-1. Brake discs and pads (front)		I	I	I	I	I	I	I	I	I	I	I
Brake drums and shoes (rear)		I	I	I	I	I	I	I	I	I	I	I
*5-2. Brake pipes and lines		–	–	I	–	–	I	–	–	I	–	–
*5-3. Brake pedal/Brake lining		I	I	I	I	I	I	I	I	I	I	I
*5-4. Brake fluid check, (#2)		I	I	I	R	I	I	I	R	I	I	I
5-5. Parking brake lever and cable check, *Adjustment (20,000 km for first time only)		–	–	I	–	–	–	–	–	–	–	–
CHASSIS AND BODY												
6-1. Tyres/Wheels		I	I	I	I	I	I	I	I	I	I	I
*6-2. Wheel bearings		–	–	–	I	–	I	–	I	–	I	–
*6-3. Drive axle boots		–	–	I	–	I	–	I	–	I	–	I
*6-4. Suspension system		–	I	–	I	–	I	–	I	–	I	–
*6-5. Steering system		–	–	I	–	I	–	I	–	I	–	I
*6-6. Automatic transmission fluid	*Fluid leak check (Class 2)											
	Fluid level (Class 1)	I	I	I	I	I	I	I	I	I	I	–
	*Fluid change (Class 1)	–	–	–	I	R	–	–	I	R	–	–
	*Fluid hose	–	–	–	–	I	–	–	–	–	I	–

Interval: This interval should be judged by odometer reading or months, whichever comes first.	km (x1000)	1	10	20	30	40	50	60	70	80	90	100
	months	1	6	12	18	24	30	36	42	48	54	60
6-7. All latches, hinges and locks		–	I	–	I	–	I	–	I	–	I	–
*6-8. Air conditioner filter element*2		–	–	I	I	R	–	I	I	R	–	I

*2 Clean more frequently if the air flow from the air conditioner decreases.
This table shows the service schedule up to 100,000 km Beyond 100,000 km, perform the same services at the same intervals shown in the chart.

⚠ WARNING

The shock absorbers are filled with high pressure gas. Never attempt to disassemble them or throw them into a fire. Avoid storing them near a heater or heating device. When scrapping the absorber, the gas must be released from the absorber safely. Ask your dealer for assistance.

Drive Belt

⚠ WARNING

When the engine is running, keep hands, hair, clothing, tools, etc. away from the moving fan and drive belts.

The drive belts tension is adjusted automatically. If the belt is too loose, insufficient battery charging, engine overheating, poor power steering, poor air conditioning, or excessive belt wear can result.

The belts should also be examined to ensure that they are not damaged.

If you need to replace or adjust the belt have it done by an authorized SUZUKI dealer or a qualified workshop.

Engine Oil and Filter

Specified Oil

K15B engine model

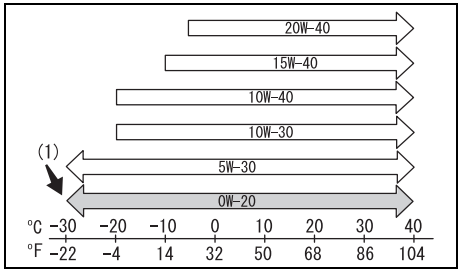

78RB07050

(1) Preferred

Be sure that the engine oil you use comes under the quality classification of as listed below.
- API SJ, SL, SM, SN or SP
- ILSAC GF-6

Select the appropriate oil viscosity according to the above chart.

SAE 0W-20 (1) is the best choice for good fuel economy and good starting in cold weather.

NOTE:
- *The replacement timing varies with the type of engine oil that you choose. Refer to "Maintenance Schedule" in this section for corresponding maintenance schedule.*
- *We recommend that you use SUZUKI genuine oil. To purchase it, see an authorized SUZUKI dealer or a qualified workshop.*

K15C engine model

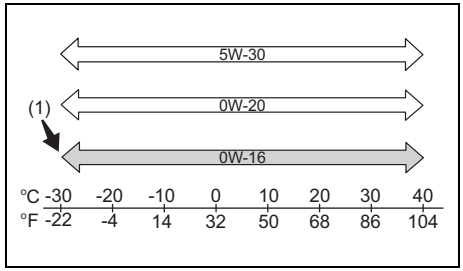

78RB07002

(1) Preferred

Be sure that the engine oil you use comes under the quality classification of as listed below.
- API SL, SM, SN or SP
- ILSAC GF-6

Select the appropriate oil viscosity according to the above chart.

SAE 0W-16 (1) is the best choice for good fuel economy and good starting in cold weather.

NOTE:
We recommend that you use SUZUKI genuine oil. To purchase it, see an authorized SUZUKI dealer or a qualified workshop.

Oil Level Check

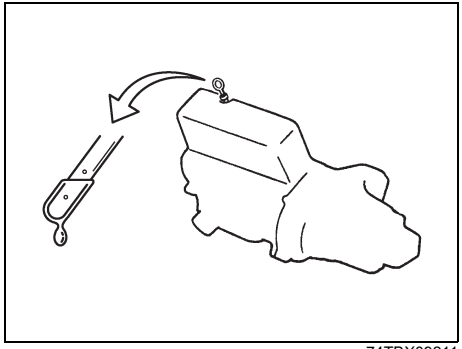

74TBX09211

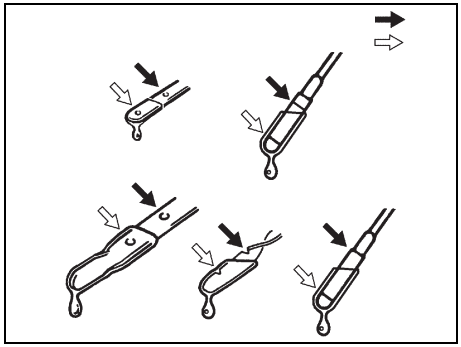

74TBX09212

It is important to keep the engine oil at the correct level for proper lubrication of your vehicle's engine. Check the oil level with the vehicle on a level surface. The oil level indication may be inaccurate if the vehicle is on a slope. The oil level should be checked either before starting the engine or at least 5 minutes after stopping the engine.
Pull out the oil dipstick, wipe the oil off with a clean cloth, insert the dipstick all the way into the engine, and then remove it again. The oil on the stick should be between the upper and lower limits shown on the stick. If the oil level indication is near the lower limit, add enough oil to raise the level to the upper limit.

NOTICE

Failure to check the oil level regularly could lead to serious engine trouble due to insufficient oil.

Refilling

Since special procedures are required, ask an authorized SUZUKI dealer or a qualified workshop for this job.

Changing Engine Oil

Since special procedures are required, ask an authorized SUZUKI dealer or a qualified workshop for this job.

Oil Filter Replacement

Since special procedures are required, ask an authorized SUZUKI dealer or a qualified workshop for this job.

Refilling with Oil and Oil Leakage Check

Since special procedures are required, ask an authorized SUZUKI dealer or a qualified workshop for this job.

Engine Coolant

Coolant Level Check

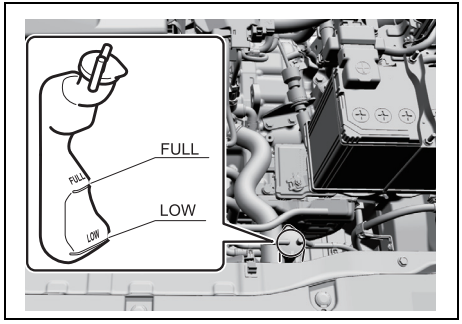

76TS90050

Check the coolant level at the reservoir tank, not at the radiator. With the engine cool, the coolant level should be between “FULL” and “LOW” marks.
If the coolant level is below “LOW” mark, coolant should be added.

Coolant addition and replacement

When you add the coolant, remove the reservoir tank cap and add coolant until the reservoir tank level reaches “FULL” mark while the engine is cool. Never fill the reservoir tank above “FULL” mark.

Since special procedures are required for coolant replacement, ask an authorized SUZUKI dealer or a qualified workshop for this job.

⚠ WARNING

Swallowing engine coolant can cause severe injury or death. Inhaling coolant mist or vapors or getting coolant in your eyes could result in severe injury.
- **Do not drink antifreeze or coolant solution. If swallowed, do not induce vomiting. Immediately contact a poison control center or a physician.**
- **Avoid inhaling coolant mist or hot vapors. If inhaled, remove to a fresh air area.**
- **If coolant gets in the eyes, flush with water and seek medical attention.**
- **Wash thoroughly after handling coolant.**
- **Keep engine coolant out of the reach of children and pets.**

NOTICE

When putting the cap on the reservoir tank, line up the mark on the cap and the mark on the tank. Failure to follow this can result in coolant leakage.

Selection of coolant

To maintain optimum performance and durability of your engine, use SUZUKI genuine coolant or equivalent.

This type of coolant is the best for cooling system for the following reasons:
- The coolant helps maintain proper engine temperature.
- It gives proper protection against freezing and boiling.
- It gives proper protection against corrosion and rust.

Failure to use the proper coolant can damage your cooling system. An authorized SUZUKI dealer can help you select the proper coolant.

NOTICE

To avoid damaging your cooling system:
- **Always use a high quality ethylene glycol base non-silicate type coolant diluted with distilled water at the correct mixture concentration.**
- **Do not add extra inhibitors or additives. They may not be compatible with your cooling system.**
- **Do not mix different types of base coolants. Doing so may result in accelerated seal wear and/or the possibility of severe overheating and extensive engine/transmission damage. In case of coolant mix-up have your vehicle inspected by an**

(Continued)

NOTICE

(Continued)
authorized SUZUKI dealer or a qualified workshop.

NOTE:
- *SUZUKI highly recommends the use of ECSTAR brand coolant. ECSTAR has been specially formulated for your SUZUKI product and contributes to the desired vehicle performance and ideal driving experience.*
- *The same type of coolant that is filled at the time of a brand new car should be used when you add or replace the coolant.*

NOTICE

- **The concentration of the mixture to be used shall be 50% antifreeze and 50% distilled water. Do not use straight coolant nor plain water.**
- **If the lowest ambient temperature in your area is expected to be –35°C (–31°F) or below, use higher concentrations up to 60% following the instructions on the antifreeze container. Concentrations greater than 60% will cause overheating conditions.**

Air Cleaner

If the air cleaner is clogged with dust, there will be greater intake resistance, resulting in decreased power output and increased fuel consumption.
Since special procedures are required, ask an authorized SUZUKI dealer or a qualified workshop for this job.

Spark Plugs

Spark Plug Replacement and Inspection

Since special procedures, materials and tools are required, it is recommended that you trust this job to an authorized SUZUKI dealer or a qualified workshop.

Automatic Transmission (AT) Fluid

Specified Fluid

4AT / 6AT model
Use an automatic transmission fluid SUZUKI AT OIL AW-1.

Fluid Level Check

4AT model
When checking the automatic transmission fluid level, perform it when the fluid temperature is 70 to 80°C (158 to 176°F).
If the fluid temperature can not be measured, ask an authorized SUZUKI dealer or a qualified workshop for this job.

NOTICE

Driving with too much or too little fluid can damage the transmission.

You must check the fluid level with the automatic transmission fluid at normal operating temperature.

To check the fluid level:
1) To warm up the transmission fluid, drive the vehicle or idle the engine until the engine coolant temperature light (blue color) goes off.
2) Then drive for ten more minutes.

NOTICE

Be sure to use the specified automatic transmission fluid. Using automatic transmission fluid other than SUZUKI AT OIL AW-1 may damage the automatic transmission of your vehicle.

NOTE:
Do not check the fluid level if you have just driven the vehicle for a long time at high speed, or if you have driven in city traffic in hot weather. Wait until the fluid cools down (about 30 minutes), or the fluid level indication will not be correct.

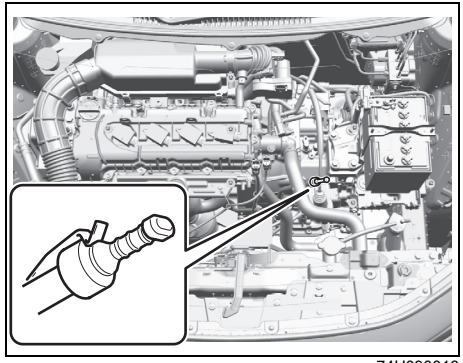

74U090013

3) Park your vehicle on level ground.
4) Apply the parking brake and then start the engine in “P” (Park). Let it idle for two minutes and keep it running during the fluid level check.

5) With your foot on the brake pedal, move the gearshift lever through each gear, pausing for about three seconds in each range. Then move it back to the "P" (Park) position.

⚠ WARNING

Be sure to depress the brake pedal when moving the gearshift lever, or the vehicle can move suddenly.

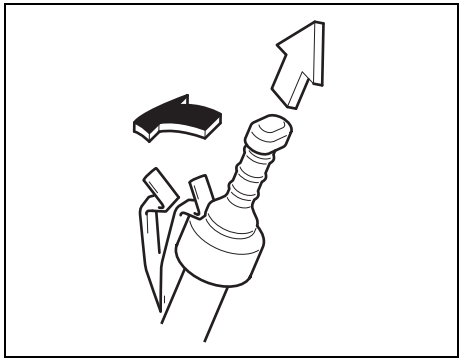

68LM707

6) The handle of the A/T fluid dipstick is colored red for easy identification. Remove the dipstick, wipe the oil off with a clean cloth and push it back in until the cap seats. Then pull out the dipstick.
7) Check both sides of the dipstick, and read the lowest level. The fluid level should be between the two marks in the hot range on the dipstick.

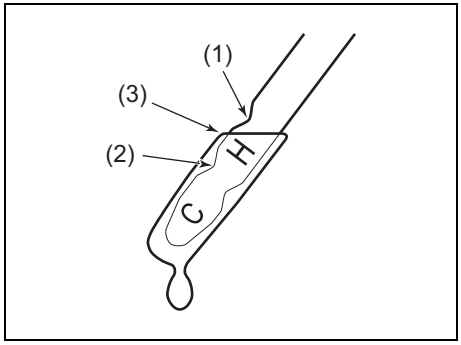

68PS00701

(1) FULL HOT
(2) LOW HOT
(3) The lowest point = Fluid level

8) Add just enough specified fluid through the dipstick hole to fill the transmission oil to the proper level.

NOTICE

After checking or adding oil, be sure to insert the dipstick securely.

NOTE:
In the case of 6-speed transmission model, you can not check the level gauge, so ask an authorized SUZUKI dealer or a qualified workshop for check and change the automatic transmission fluid.

6AT model
Since special procedures, materials, and tools are required to change the automatic transmission oil, ask an authorized SUZUKI dealer or a qualified workshop for this job.

Changing Oil

Since special procedures, materials, and tools are required to change the automatic transmission oil, ask an authorized SUZUKI dealer or a qualified workshop for this job.

Brakes

Brake Fluid

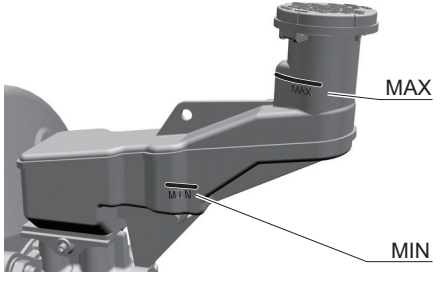

76TS90380

Check the brake fluid level by looking at the reservoir in the engine compartment. Check that the fluid level is between “MAX” and “MIN” lines.

⚠ WARNING

- **Failure to follow the guidelines below can result in personal injury or serious trouble in the brake system.**
  - **If the brake fluid in the reservoir drops below a certain level, the brake warning light on the instrument cluster will come on (the engine must be running with the parking brake fully disengaged). Should the light come on, immediately ask an authorized SUZUKI dealer or a qualified workshop to inspect the brake system.**
  - **A rapid fluid loss indicates leakage in the brake system. In this case, immediately ask an authorized SUZUKI dealer or a qualified workshop to inspect the brake system.**
  - **Do not use any fluid other than DOT3 or SAE J1703 brake fluid. Do not use reclaimed fluid or fluid that has been stored in old or open containers. It is essential that foreign particles and other liquids are kept out of the brake fluid reservoir.**

(Continued)

⚠ WARNING

(Continued)

- **Brake fluid is harmful or fatal if swallowed, and harmful if it comes in contact with skin or eyes. If swallowed, do not induce vomiting. Immediately contact a poison control center or a physician. If brake fluid gets in eyes, flush eyes with water and seek medical attention. Wash thoroughly after handling. Solution can be poisonous to animals. Keep out of reach of children and animals.**

NOTICE

- **If your brake fluid level is near the “MIN” line, there is a possibility of brake pad and/or shoe wear and brake fluid leakage. In this case, ask an authorized SUZUKI dealer or a qualified workshop to inspect the brake system.**
- **Brake fluid can damage painted surfaces. Be careful when refilling the reservoir.**

NOTE:
- *The fluid level can be expected to gradually fall as the brake pad and/or shoe wear.*
- *Brake fluid absorbs water over time and brake fluid with high water content may cause vapor lock or brake system malfunction.*
  Replace the brake fluid according to the maintenance schedule in this owner's manual.

Brake Pedal

Check brake pedal stroke. If the stroke is so large, have the brake system inspected by an authorized SUZUKI dealer or a qualified workshop. If you doubt the brake pedal is at its normal height, check it as follows:

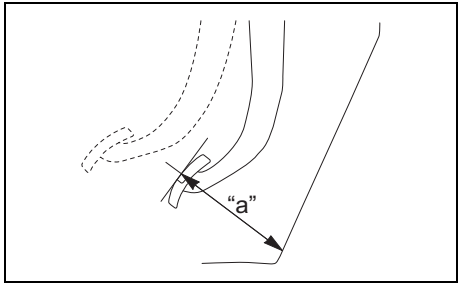

74TBX09003

Minimum distance between brake pedal and floor carpet "a"

RHD : 53 mm or more
LHD : 61 mm or more

With the engine running, measure the distance between the brake pedal and floor carpet when the pedal is depressed with approximately 30 kg (66 lbs) of force. The minimum distance required is as specified. Since your vehicle's brake system is self-adjusting, there is no need for pedal adjustment.

If the pedal to floor carpet distance as measured above is less than the minimum distance required, have your vehicle inspected by an authorized SUZUKI dealer or a qualified workshop.

NOTE:
- *When measuring the distance between the brake pedal and floor wall, be sure not to include the floor mat or rubber on the floor carpet in your measurement.*
- *Measure the distance at the brake pedal's side facing toward the driver's door.*

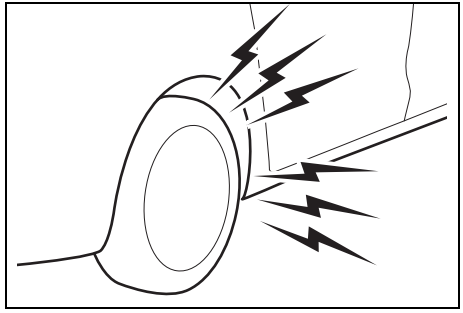

74TBX09004

⚠ WARNING

If the brake pad lining becomes worn and it has reached its minimum thickness, squealing noise sounds during braking.
If you hear this noise, have the vehicle inspected immediately by an authorized SUZUKI dealer or a qualified workshop.
Continued driving with this condition can cause an accident.

⚠ CAUTION

If you experience any of the following problems with your vehicle's brake system, have the vehicle inspected immediately by an authorized SUZUKI dealer or a qualified workshop.
- **Poor braking performance**
- **Uneven braking (brakes not working uniformly on all wheels)**
- **Excessive pedal travel**
- **Brake dragging**

Parking Brake

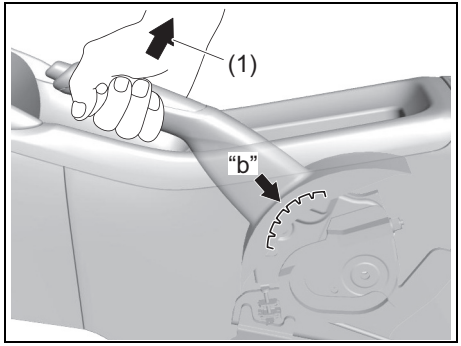

74U090004

Ratchet tooth specification "b":
4th – 9th
Lever pull force (1):
200 N (20 kg, 45 lbs)

Check the parking brake for proper adjustment by counting the number of clicks made by the ratchet teeth as you slowly pull up on the parking brake lever to the point of full engagement. The parking brake lever should stop between the specified ratchet teeth and the rear wheels should be securely locked. If the parking brake is not properly adjusted or the brakes drag is suspected even after the lever has been fully released, have the parking brake inspected and/or adjusted by an authorized SUZUKI dealer or a qualified workshop.

Brake Discs and Brake Drums

Brake disc

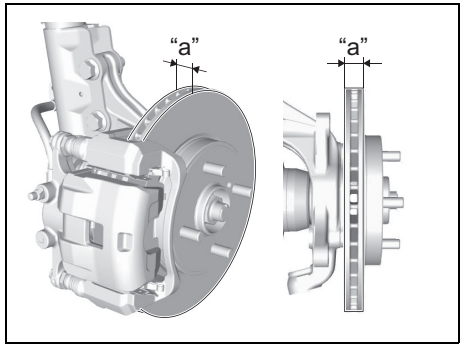

74TBX09006

Brake location	Minimum thickness "a"
Front wheels	18.0 mm (0.7 in.)

Brake drum

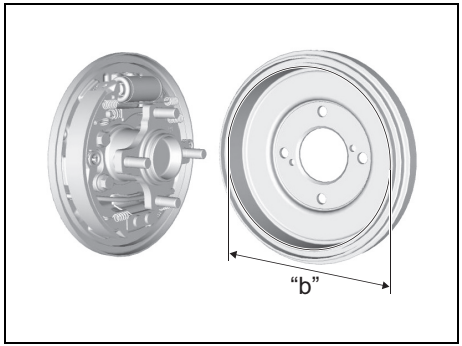

74TBX09007

Brake location	Maximum inner diameter "b"
Rear wheels	202 mm (7.95 in.)

If the measured thickness or inner diameter of the most worn part falls below or exceeds the value indicated above, the parts should be replaced with a new one. The measurement involves disassembling each brake and requires the use of a micrometer or caliper, which must be done according to the instructions described in the relevant service manual or available from the relevant repair information site.

Steering Wheel

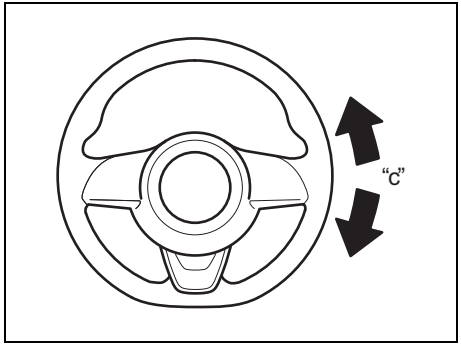

74TBX09008

Steering wheel play "c":
0–30 mm (0.0–1.2 in.)

Check the free play of the steering wheel by gently turning it from left to right and measuring the distance that it moves before you feel slight resistance. The play should be between the specified values.

Check that the steering wheel turns easily and smoothly without rattling by turning it all the way to the right and to the left while driving very slowly in an open area. If the amount of free play is not as specified or you find anything else to be wrong, an inspection must be performed by an authorized SUZUKI dealer or a qualified workshop.

Tyres

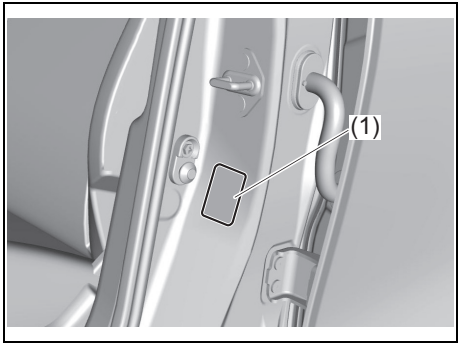

74U090005

The front and rear tyre pressure specifications are listed in the tyre information label (1). Both front and rear tyres should have the specified tyre pressure.

Note that the value does not apply to the compact spare tyre, if equipped.

Tyre Inspection

Inspect your vehicle's tyres at least once a month or before long trip by performing the following checks:

1) Measure the air pressure with a tyre gauge. Adjust the pressure if necessary.

⚠ WARNING

- **Air pressures should be checked when the tyres are cold or you may get inaccurate readings.**
- **Check the tyre pressure from time to time while inflating the tyre gradually, until the specified pressure is obtained.**
- **Never under-inflate or over-inflate the tyres.**
  Under-inflation can cause unusual handling characteristics or can cause the rim to slip on the tyre bead, resulting in an accident or damage to the tyre or rim.
  Over-inflation can cause the tyre to burst, resulting in personal injury. Over-inflation can also cause unusual handling characteristics which may result in an accident.

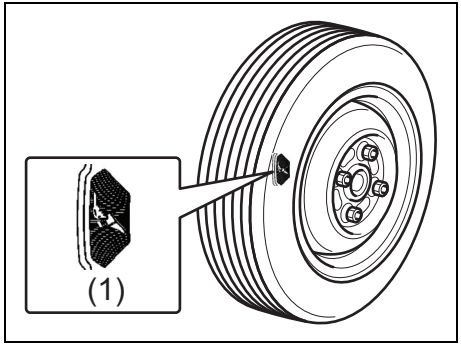

74TBX09010

(1) Indicator location mark

2) Check that the depth of the tread groove is more than 1.6 mm. To help you check this, the tyres have molded-in tread wear indicators in the grooves. When the indicators appear on the tread surface, the remaining depth of the tread is 1.6 mm or less and the tyre should be replaced.
3) Check for abnormal wear, cracks and damage. Any tyres with cracks or other damage should be replaced. If any tyres show abnormal wear, have them inspected by an authorized SUZUKI dealer or a qualified workshop.

⚠ CAUTION

Hitting curbs and running over rocks can damage tyres and affect wheel alignment. Have tyres and wheel alignment checked periodically by an authorized SUZUKI dealer or a qualified workshop.

4) Check for loose wheel nuts.
5) Check that there are no nails, stones or other objects sticking into the tyres.

⚠ WARNING

- **Your SUZUKI vehicle is equipped with tyres which are all the same type and size. This is important to ensure proper steering and handling of the vehicle. Never mix tyres of different size or type on the four wheels of your vehicle. The size and type of tyres used should be only those approved by SUZUKI as standard or optional equipment for your vehicle.**

(Continued)

⚠ WARNING

(Continued)

- **Replacing the wheels and tyres equipped on your vehicle with certain combinations of aftermarket wheels and tyres can significantly change the steering and handling characteristics of your vehicle.**
- **Therefore, use only those wheel and tyre combinations approved by SUZUKI as standard or optional equipment for your vehicle.**

NOTICE

- **Replacing the original tyres with tyres of a different size may result in false speedometer or odometer readings. Check with an authorized SUZUKI dealer or a qualified workshop before purchasing replacement tyres that differ in size from the original tyres.**
- **Replacing a tyre with one of a different size, or using different brands among the four tyres can result in damage to the drive train.**

Tyre Rotation

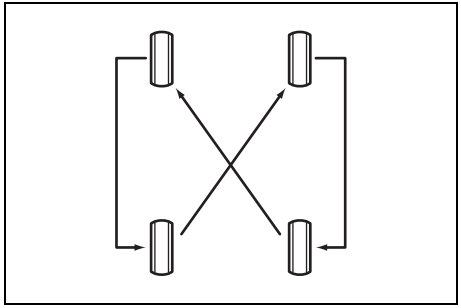

74U090015

To avoid uneven wear of your tyres and to prolong their life, rotate the tyres as illustrated. Tyres should be rotated every 10000 km (6000 miles). After rotation, adjust front and rear tyre pressures to the specification listed on your vehicle's Tyre Information Label.

Wheel Balancing

If the vehicle vibrates abnormally on smooth road, have the wheel balanced at an authorized SUZUKI dealer or a qualified workshop.

Wheel Alignment

In case of abnormal tyre wear or pulling towards one side, have the wheel aligned at an authorized SUZUKI dealer or a qualified workshop.

Tubeless Tyres

The vehicle is equipped with Tubeless Tyres. In tubeless tyre, a thin layer of butyl rubber is used for lining the inside of the tubeless tyre. This layer is to prevent air loss and fulfilling the purpose of tube. The air pressure is maintained by the sealing between tyre bead and wheel rim. Tubeless tyres are having advantage of slow air loss and preventing sudden deflation while driving.

Care and maintenance tips for tubeless tyres

1) Always maintain recommended inflation pressure. Driving continuously at low inflation pressure can lead to tyre damage.
2) In case any leakage is found, check for any nail penetration/valve core damage or rim bent. Damaged wheel must not be used.
3) In case tyre has run at low pressure, it must be inspected for any defect.
4) Whenever new tyre is fitted, replace the valve.
5) If continuous high speed driving is required, increase tyres pressure by 5 psi over recommended inflation pressure.
6) Never run the tyre beyond TWI (Tread wear indicator). The tyre is recommended to be replaced when the remaining tread has worn to this point. The indicators are spaced across the tread around the tyre marked by a triangular symbol (TWI).
7) Always prefer tubeless tyre mounting machine. In case of manual mounting-tyre/wheel rim damage may occur.
8) In case of any problem, please get in touch with an authorized SUZUKI dealer or a qualified workshop.

Battery

⚠ WARNING

- **Batteries produce flammable hydrogen gas. Keep flames and sparks away from the battery or an explosion may occur. Never smoke when working near the battery.**
- **When checking or servicing the battery, disconnect the negative cable. Be careful not to cause a short circuit by allowing metal objects to contact the battery posts and the vehicle at the same time.**
- **To avoid harm to yourself or damage to your vehicle or battery, follow the jump-starting instructions in "EMERGENCY SERVICE" section if it is necessary to jump-start your vehicle.**
- **Diluted sulfuric acid spilled from battery can cause blindness or severe burns. Use proper eye protection and gloves. Flush eyes or body with ample water and get medical care immediately if suffered. Keep batteries out of reach of children.**

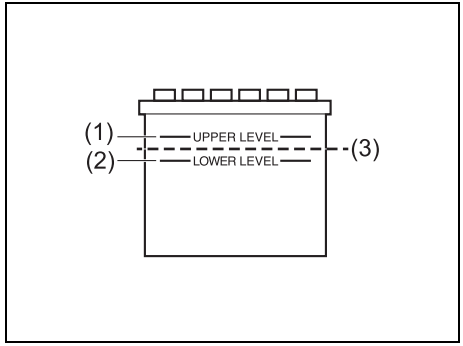

69TJ052070

For maintenance-free battery (cap-less type), you need not add water. For traditional type battery, which has water filler caps, the level of the battery solution must be kept between the upper level line "MAX" (1) and the lower level line "MIN" (2) at all times. If the fluid level is lower than the intermediate line (3) between the upper level line (1) and lower level line (2), add distilled water to the upper level line (1). You should periodically check the battery, battery terminals, and battery hold-down bracket for corrosion. Remove corrosion using a stiff brush and ammonia mixed with water, or baking soda mixed with water. After removing corrosion, rinse with clean water.

If your vehicle is not going to be driven for a month or longer, disconnect the cable

from the negative terminal of the battery to help prevent discharge.

⚠ WARNING

If the battery is used with battery level being less than the lower level line "MIN" (2), it may cause reduced battery life, an exothermic heat, or an explosion by hydrogen gas occurring from the battery. Do not use the battery with battery level being less than the lower level line "MIN" (2).

NOTICE

- **If the battery liquid is added more than the upper level line "MAX" (1), liquid may leak by vibrations during driving or liquid may spray out in some case depending on the condition of battery charging. These may cause damage to the parts near the battery. If the battery liquid overspills, immediately wash away with water. Do not add the battery liquid more than the upper level line "MAX" (1).**

(Continued)

NOTICE

(Continued)

- **If your vehicle is equipped with the ENG A-STOP system and the battery which is exclusive for the ENG A-STOP system is used, only use the specified type of battery for ENG A-STOP system. Refer to "SPECIFICATIONS" section for details. Otherwise, you could damage your vehicle, and the ENG A-STOP system could not be available. If a vehicle battery has to be replaced, consult an authorized SUZUKI dealer or a qualified workshop.**

NOTE:
The battery liquid is consumed when the battery is used. If the level is found to be less than the center of upper level "MAX" (1) and lower level "MIN" (2), add distilled water till it reaches the upper level line "MAX" (1).

Replacement of the Battery

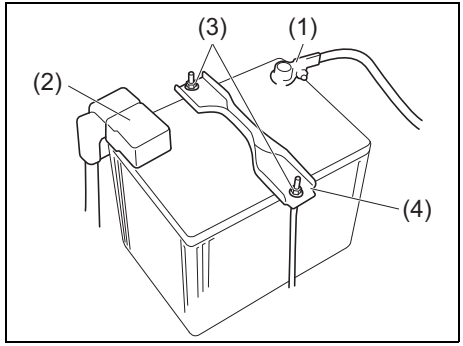

74TBX09014

To remove the battery:
1) Disconnect the negative cable (1).
2) Disconnect the positive cable (2).
3) Remove the retainer nuts (3) and remove the retainer (4).

To install the battery:
1) Install the battery in the reverse order of removal.
2) Tighten the bracket bolt and battery cables securely.

NOTE:
- *When the battery is disconnected, some of the vehicle's functions will be initialized and/or deactivated.*
  These functions must be required to reset after the battery is reconnected.
- *Do not disconnect the battery terminals for at least one minute after the ignition switch is turned to "LOCK" position, or the engine switch is pressed to change the ignition mode to "LOCK" (OFF).*

⚠ WARNING

Batteries contain toxic substances including sulfuric acid and lead. They could have potential negative consequences for the environment and human health. Used batteries must be disposed of or recycled according to applicable rules or regulations and must not be disposed of with ordinary household trash. Make sure not to tip over the battery when you remove it from the vehicle. Otherwise, sulfuric acid could run out and you might get injury.

NOTICE

After stopping the engine, controller and system are operated for a while. Therefore, before removing the battery, wait for more than one minute after turning the ignition switch to "OFF" or changing the ignition mode to "LOCK" (OFF).

(Battery label)

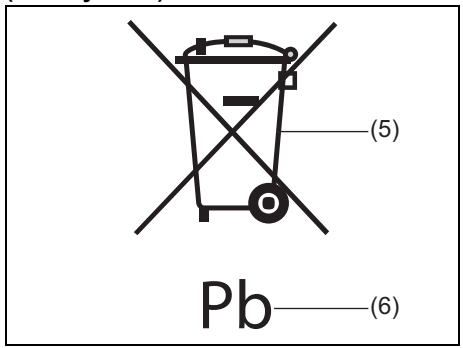

74TBX09015

(5) Crossed-out wheeled bin symbol
(6) Chemical symbol of "Pb"

The crossed-out wheeled bin symbol (5) located on the battery label indicates that the used battery should be collected separately from ordinary household trash. The chemical symbol of "Pb" (6) indicates the battery contains more than 0.004% lead.

By ensuring the used battery is disposed of or recycled correctly, you will help prevent potential negative consequences for the environment and human health, which could otherwise be caused by inappropriate trash handling of the battery. The recycling of materials will help to conserve natural resources. For more detailed information about disposing of or recycling the used battery, consult an authorized SUZUKI dealer or a qualified workshop.

Fuses

Your vehicle has three types of fuses, as described below:

Main fuse
The main fuse takes current directly from the lead-acid battery.

Primary fuses
These fuses are between the main fuse and individual fuses, and are for electrical load groups.

Individual fuses
These fuses are for individual electrical circuits.

To remove a fuse, use the fuse puller provided in the relay box cover.

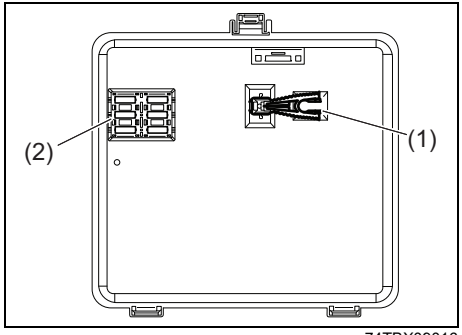

74TBX09016

(1) Fuse puller
(2) Spare fuse

Fuses in Engine Compartment

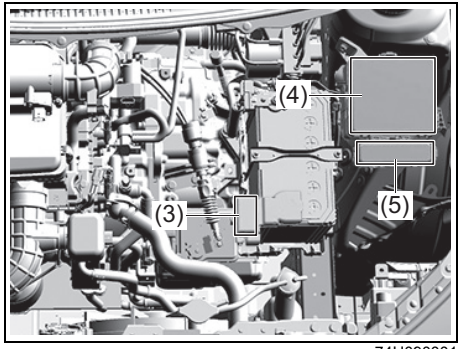

74U090001

(3) Main fuse box
(4) Relay box
(5) Sub relay box

Main fuse box

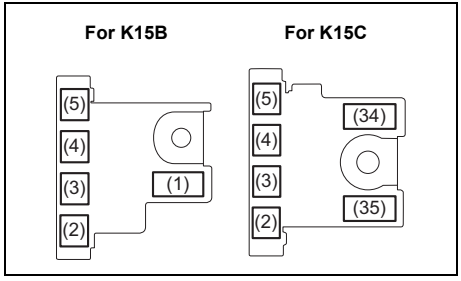

74TBX09059

Relay box

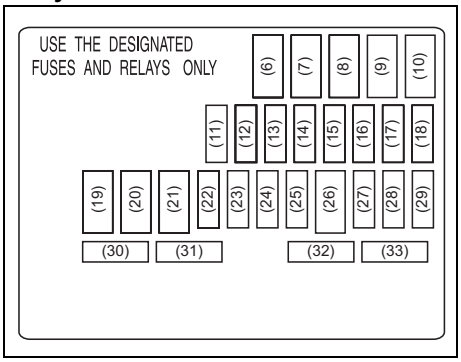

74TBX09060

MAIN FUSE / PRIMARY FUSE		
(1)	120 A	FL1
(2)	100 A	FL2
(3)	80 A	FL3
(4)	100 A	FL4
(5)	50 A	FL5
(6)	30 A	Starting motor
(7)	40 A	Blower fan
(8)	–	Blank
(9)	40 A	ABS motor
(10)	40 A	Ignition switch
(11)	30 A	B/U

(12)	–	Blank
(13)	25 A	H/L HI2
(14)	–	Blank
(15)	25 A	ABS solenoid
(16)	15 A	Headlight (Left)
(17)	15 A	Headlight (Right)
(18)	10 A	A/B2
(19)	40 A	RDTR
(20)	–	Blank
(21)	–	Blank
(22)	–	Blank
(23)	–	Blank
(24)	–	Blank
(25)	–	Blank
(26)	50 A	Ignition switch 2
(27)	15 A	Transmission
(28)	15 A	FI
(29)	10 A	CPRSR
(30)	–	Blank
(31)	–	Blank
(32)	5 A	Starting Signal
(33)	–	Blank
(34)	200A	FL6
(35)	–	Blank

Sub relay box

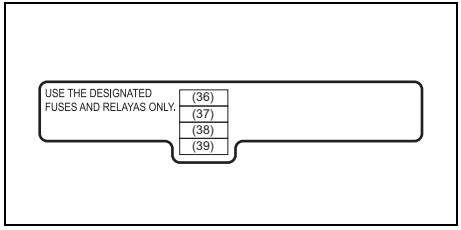

74U090003

MAIN FUSE / PRIMARY FUSE		
(36)	–	–
(37)	–	–
(38)	15 A	H/L HI R
(39)	15 A	H/L HI L

The main fuse, primary fuses and some of the individual fuses are located in the engine compartment. If the main fuse blows, no electrical component will function. If a primary fuse blows, no electrical component in the corresponding load group will function. When replacing the main fuse, a primary fuse or an individual fuse, use a genuine SUZUKI replacement. To remove a fuse, use the fuse puller provided in the fuse box. The amperage of each fuse is shown in the back of the relay box cover.

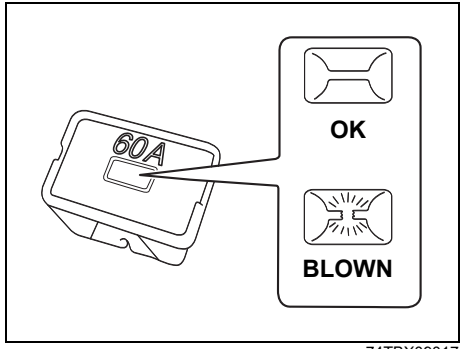

74TBX09017

⚠ WARNING

If the main fuse or a primary fuse blows, have your vehicle inspected by an authorized SUZUKI dealer or a qualified workshop. Always use a genuine SUZUKI replacement. Never use a substitute such as a wire even for a temporary repair, or extensive electrical damage and a fire can result.

NOTE:
Check that the relay box always carries spare fuses.

Fuses Under Dashboard

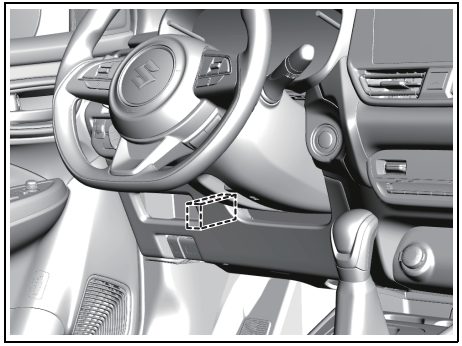

74U090006

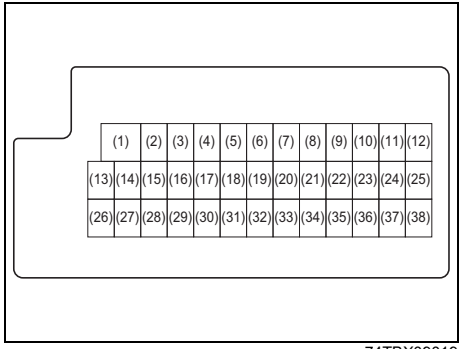

74TBX09019

PRIMARY FUSE		
(1)	30 A	Power window
(2)	10 A	Meter
(3)	15A	Ignition coil
(4)	5A	Ignition-1 signal 2
(5)	20 A	Blank
(6)	10 A	CHG
(7)	10 A	STL2
(8)	20 A	Door Lock
(9)	15 A	Steering lock
(10)	10 A	Hazard
(11)	5A	A-STOP controller
(12)	10A	Blank
(13)	5 A	ABS / ESP® control module
(14)	15A	Blank
(15)	5A	Ignition-1 signal 3
(16)	10 A	Dome light-2
(17)	5 A	Dome light
(18)	15 A	Radio
(19)	5 A	CONT
(20)	5 A	Key-2
(21)	20 A	Power window timer
(22)	5 A	Key
(23)	15 A	Horn
(24)	5 A	Tail light (Left)
(25)	10 A	Tail light
(26)	10 A	Air bag
(27)	10 A	Ignition-1 signal
(28)	10 A	Back up light
(29)	5 A	Blank
(30)	20 A	Rear defogger
(31)	10A	Blank
(32)	15 A	ACC-2
(33)	5 A	ACC
(34)	10 A	Wiper
(35)	5 A	Ignition-2 signal
(36)	15 A	Washer
(37)	25 A	Front wiper
(38)	10 A	Stop light

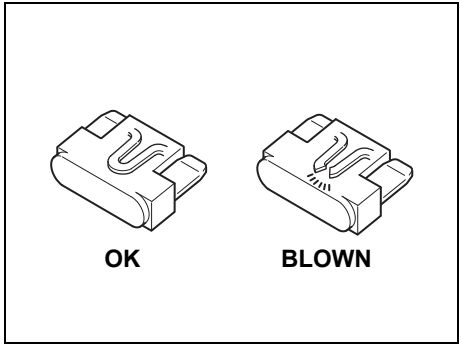

74TBX09020

⚠ WARNING

Always replace a blown fuse with a fuse of the correct amperage. Never use a substitute such as aluminum foil or wire to replace a blown fuse. If you replace a fuse and the new one blows in a short period of time, you may have a major electrical problem. Have your vehicle inspected immediately by an authorized SUZUKI dealer or a qualified workshop.

Headlight Aiming

Since special procedures are required, ask an authorized SUZUKI dealer or a qualified workshop for this job.

Bulb Replacement

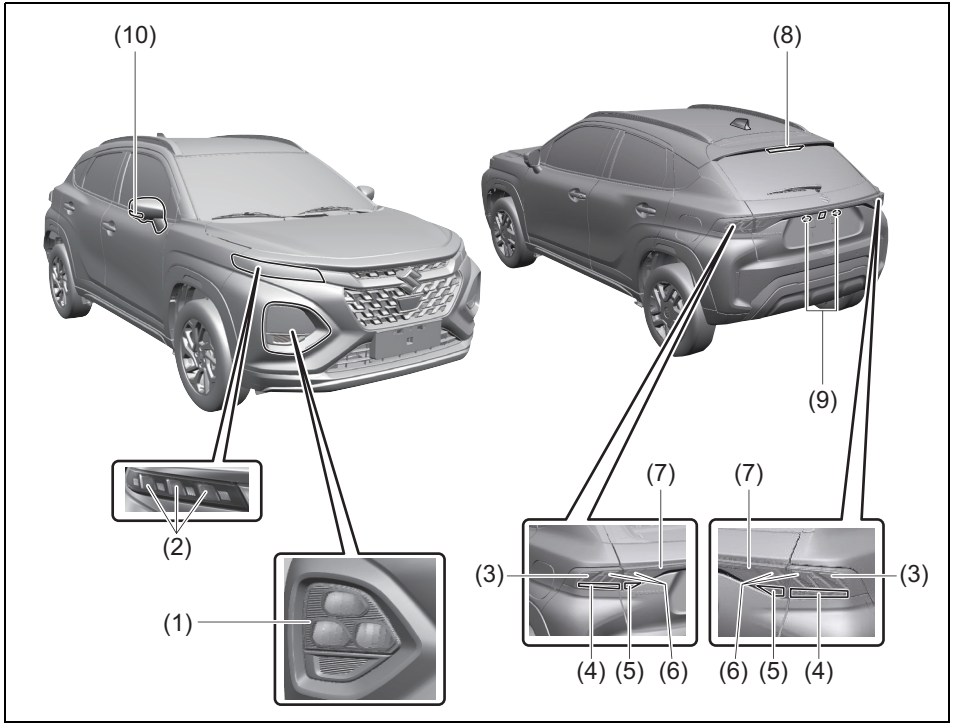

74U090011

No.	ITEM: Lights	WATT-AGE	BULB No.
(1)	Headlight*1	LED	–
(2)	Front turn signal light, Position light and daytime running light (D.R.L)*1	LED	–
(3)	Brake light and tail light*1	LED	–
(4)	Rear turn signal light*1	LED	–
(5)	Reversing light*1	LED	–
(6)	Tail light*1	LED	–
(7)	Tail light*1 (if equipped)	LED	–
(8)	High mount stop light*1	LED	–
(9)	License plate light*1	LED	–
(10)	Side turn signal light*1	LED	–

If you need to replace the following bulbs indicated in the above table, consult an authorized SUZUKI dealer or a qualified workshop.

*1: Since the lights are non-disassemble type, you cannot replace a bulb. Replace the target assembly if any bulb is defective.

⚠ CAUTION

- **Light bulbs can be hot enough to burn your finger right after turning off lights. This is true especially for halogen headlight bulbs. Replace the bulbs after they become cool enough.**
- **To avoid injury by sharp-edged parts of the body, wear gloves and a long-sleeved shirt when replacing light bulbs.**

NOTICE

- **The oils from your skin may cause a halogen bulb to overheat and burst when the lights are on. Grasp a new bulb with a clean cloth.**
- **Frequent bulb replacement indicates the need for an inspection of the electrical system. This should be carried out by an authorized SUZUKI dealer or a qualified workshop.**
- **During bulb replacement always use same bulb number as used in vehicle which is imprinted on the said bulb/unit and/or mentioned in this section.**

NOTE:
The inner surface of lens such as the headlights or the rear combination lights may be clouded or dew condensation may occur by driving on a rainy day or washing the vehicle. This is a temporary phenomenon caused by temperature difference between the inside and the outside of the lights. (This is the same phenomenon as the windows are clouded on a rainy day.)
Also, it sometimes seems that water gets into the lights because of water drop on the edge of the lens. This is a temporary phenomenon caused by water adherence to the outside of the lights.
The above-mentioned phenomena are not vehicle malfunction.
However, if water is piled up in the lights or large waterdrop adheres to the inner surface of lens, have your vehicle inspected by an authorized SUZUKI dealer or a qualified workshop.

Non-disassembled Type Lights

All exterior lights are non-disassemble type, you cannot replace a bulb. Replace the target assembly if any bulb is defective. If you need to replace the assembly, ask an authorized SUZUKI dealer or a qualified workshop.

Headlights

Since special procedures are required, it is recommended that you take your vehicle to an authorized SUZUKI dealer or a qualified workshop for light replacement.

Side Turn Signal Light

Since special procedures are required, it is recommended that you take your vehicle to an authorized SUZUKI dealer or a qualified workshop for light replacement.

High Mount Stop Light

Since special procedures are required, it is recommended that you take your vehicle to an authorized SUZUKI dealer or a qualified workshop for light replacement.

Front Turn Signal Light and Front Position Light

Since special procedures are required, it is recommended that you take your vehicle to an authorized SUZUKI dealer or a qualified workshop for light replacement.

Daytime Running Light (D.R.L.)

Since special procedures are required, it is recommended that you take your vehicle to an authorized SUZUKI dealer or a qualified workshop for light replacement.

Rear Combination Light

Since special procedures are required, it is recommended that you take your vehicle to an authorized SUZUKI dealer or a qualified workshop for light replacement.

License Plate Light

Since special procedures are required, it is recommended that you take your vehicle to an authorized SUZUKI dealer or a qualified workshop for light replacement.

Interior Light

Front

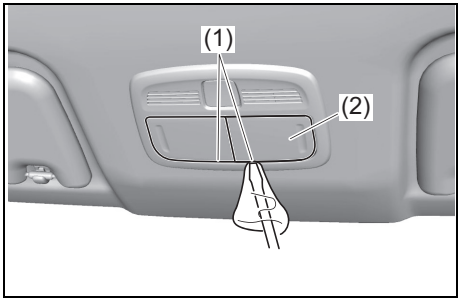

74TBX09028

1) To prevent scratches, insert a commercially available flat-blade screwdriver covered with a soft cloth into the notch (1), and then remove the lens (2).

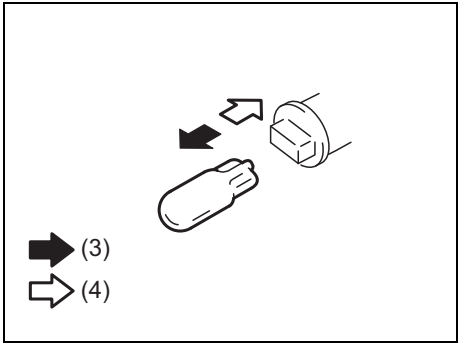

74TBX09029

(3) Removal
(4) Install

2) Pull the bulb out and then insert a new one.
3) After replacing the bulb, install the front interior light lens in the reverse order of removal.

Center

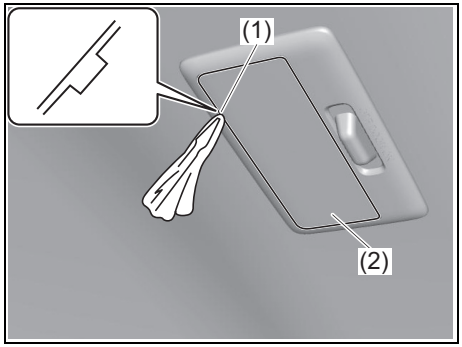

74TBX09030

1) To prevent scratches, insert a commercially available flat-blade screwdriver covered with a soft cloth into the notch (1), and then remove the lens (2).

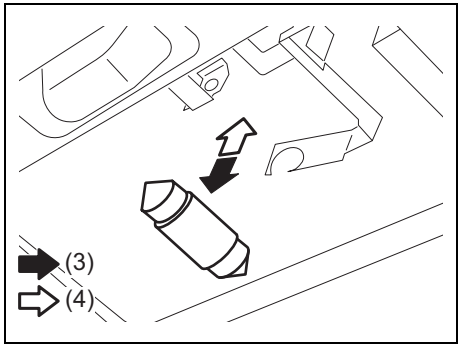

74TBX09031

(3) Removal
(4) Installation

2) Pull the bulb out and then insert a new one.
3) After replacing the bulb, install the center interior light lens in the reverse order of removal.

Luggage compartment

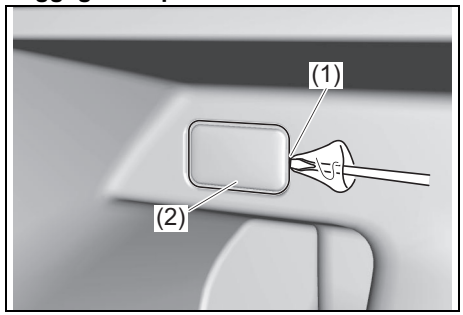

74TBX09032

1) To prevent scratches, insert a commercially available flat-blade screwdriver covered with a soft cloth into the notch (1), and then remove the lens (2).

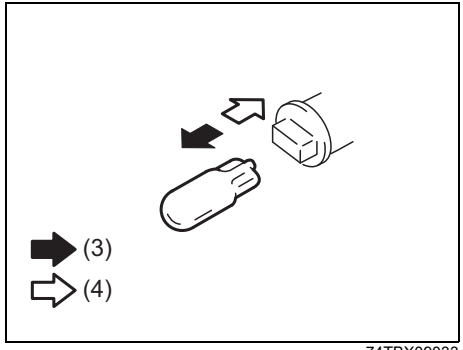

74TBX09033

(3) Removal
(4) Install

2) Pull the bulb out and then insert a new one.
3) After replacing the bulb, install the luggage compartment light lens in the reverse order of removal.

Glove box light (if equipped)

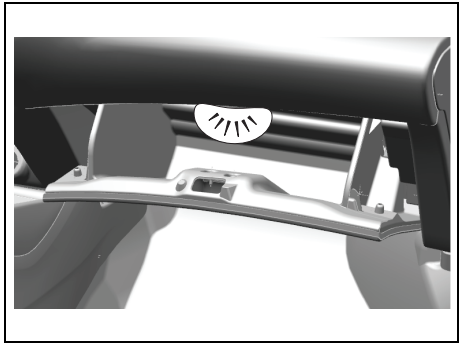

74U090007

1) Press inward on both sides of the glove box and pull frontward and then unclamp it.
2) To remove and install the bulb of the glove box light (1), simply pull out or push in the bulb.

Wiper Blades

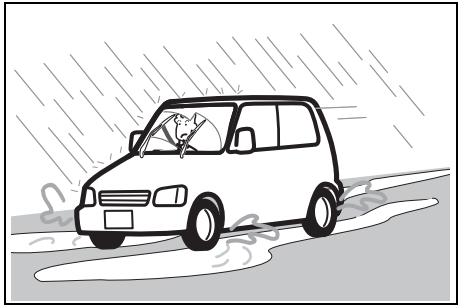

74TBX09037

If the wiper blades become brittle or damaged, or make streaks when wiping, replace the wiper blades.

To install new wiper blades, follow the procedures below.

NOTICE
To avoid scratching or breaking the window, do not let the wiper arm strike the window while replacing the wiper blade.

NOTE:
Some wiper blades may be different from the ones described here depending on vehicle specifications. If so, consult an authorized SUZUKI dealer or a qualified workshop for proper replacement method.

For Windshield Wipers

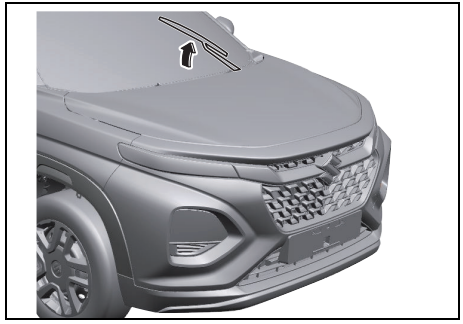

74U090012

1) Hold the wiper arm away from the window.

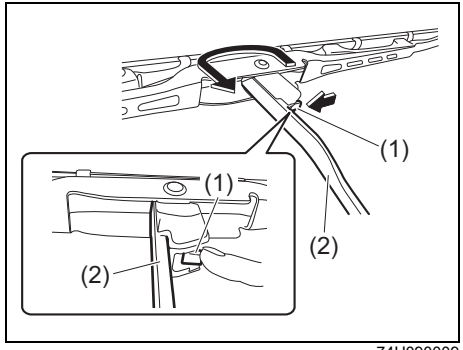

74U090009

2) Squeeze lock (1) towards wiper arm (2) and remove the wiper frame from the arm as shown.

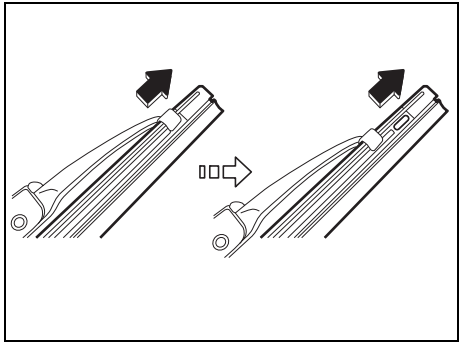

74TBX09040

3) Unlock the lock end of the wiper blade and slide the blade out as shown.

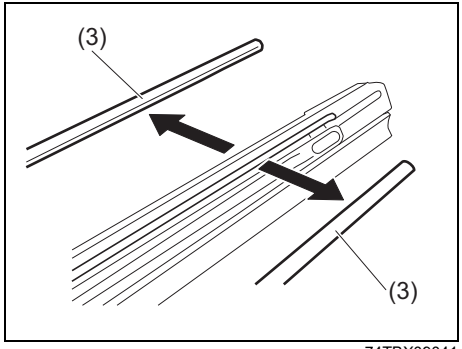

74TBX09041

(3) Retainer

4) If the new blade is provided without the two metal retainers, move them from the old blade to the new one.

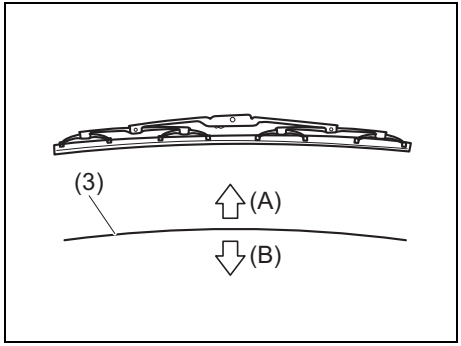

74TBX09042

(A) Up
(B) Down

NOTE:
When you install the metal retainers (3), make sure the direction of metal retainers as shown in the above illustration.

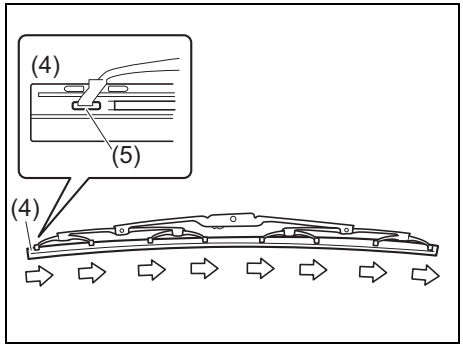

74TBX09043

(4) Locked end

5) Install the new blade in the reverse order of removal, with the locked end positioned toward the wiper arm. Make sure the blade is properly retained by all the hooks. Lock the blade end into place.
6) Reinstall wiper frame to arm, making sure that the lock lever is snapped securely into the arm.

NOTICE
Fit the stopper side (5) of the wiper blade rubber in the driver's seat side. Otherwise, the wiper blade rubber may be misaligned while the wiper operates.

For Rear Window Wiper

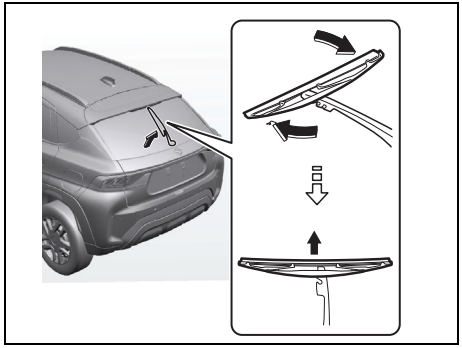

74TBX09044

1) Hold the wiper arm away from the window.
2) Remove the wiper frame from the arm as shown.

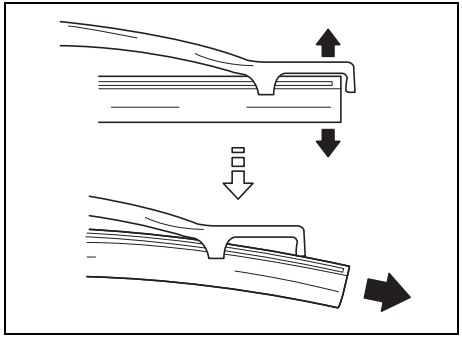

74TBX09045

3) Slide the blade out as shown.

NOTE:
Do not flex the wiper blade frame end more than necessary. If you do, it can break off.

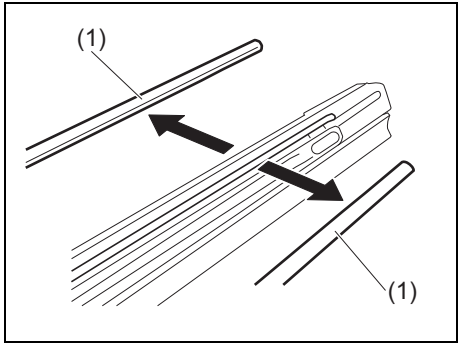

74TBX09046

(1) Retainer

4) If the new blade is provided without the two metal retainers, move them from the old blade to the new one.
5) Install the new blade in the reverse order of removal.
   Make sure the blade is properly retained by all the hooks.
6) Reinstall wiper frame to arm in the reverse order of removal.

Windshield Washer Fluid

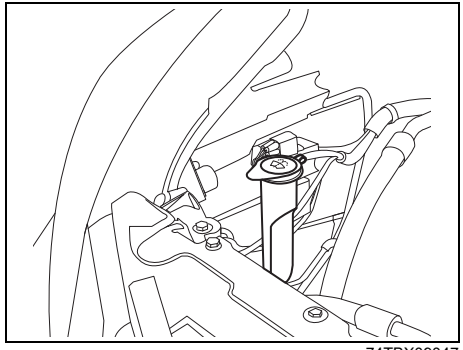

74TBX09047

Check that there is washer fluid in the tank. Refill it if necessary. Use a good quality windshield washer fluid, diluted with water as necessary.

⚠ WARNING

- **Do not use radiator antifreeze in the windshield washer reservoir. This can severely impair visibility when sprayed on the windshield, and also can damage your vehicle's paint.**
- **Do not add washer fluid when the engine is hot or operating as washer fluid contains alcohol and may catch fire if spilled on the engine, etc.**

⚠ CAUTION

Precautions for handling the washer fluid are written on the container. Refer to the instruction and read it carefully.

NOTICE

Damage may result if the washer motor is operated with no fluid in the washer tank.

Air Conditioning System

If you do not use the air conditioner for a long period, such as during winter, it may not give the best performance when you start using it again. To help maintain optimum performance and durability of your air conditioner, it needs to be run periodically. Operate the air conditioner at least once a month for one minute with the engine idling. This circulates the refrigerant and oil and helps protect the internal components.

Air Conditioner Filter Replacement

Since special procedures are required, ask an authorized SUZUKI dealer or a qualified workshop for this job.

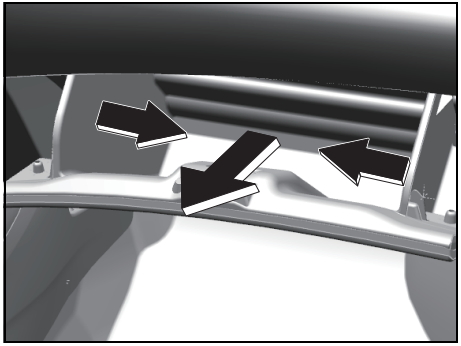

74U090010

1) To approach the air conditioner filter, remove the glove box by pressing both sides of the glove box inward and pulling it out.

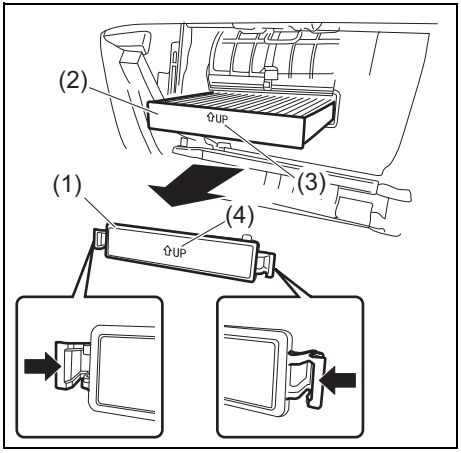

74TBX09049

2) Remove the cover (1) and pull out the air conditioner filter (2).

NOTE:

- *When you install a new filter, check that the UP mark (3) faces upward.*
- *When you install the cover, check that the UP mark (4) faces upward.*

Preparation Before Winter Season

Windshield Washer Fluid

To prevent windshield washer fluid from freezing, dilute it by the ratio according to outside temperature.

Lead-acid Battery

Check the liquid measure and the specific gravity of lead-acid battery. When it becomes cold, the battery performance gets worse. Also, it becomes difficult to start the engine by the weak battery. Refer to “Battery” in the “INSPECTION AND MAINTENANCE” section.

Engine Coolant

To prevent the inside of engine from corroding and freezing, use the designated engine coolant. Refer to “Specifications” in the “SPECIFICATIONS” section.

NOTE:
To check the concentration of engine coolant or replace it, ask an authorized SUZUKI dealer or a qualified workshop.

Winter Tyres and Chocks

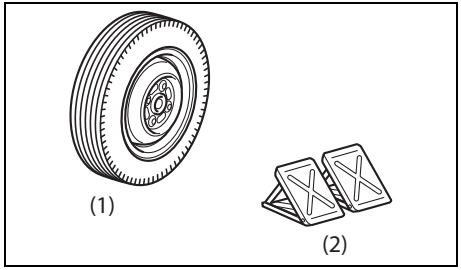

74TBX09050

(1) Winter tyre
(2) Chock

Winter tyres and chocks are necessary to drive on the snow roads or the frozen roads.

Before Your Driving

Snow on the Roof



74TBX09051

Remove snow on the roof before your driving. If you do not remove it, snow may fall during your driving and it may hinder your view.

- For vehicle equipped with Dual Sensor Brake Support II (DSBS II), the Dual Sensor Brake Support II (DSBS II) may not operate properly when there is snow or frost on the windshield.

Frozen Wiper Blades

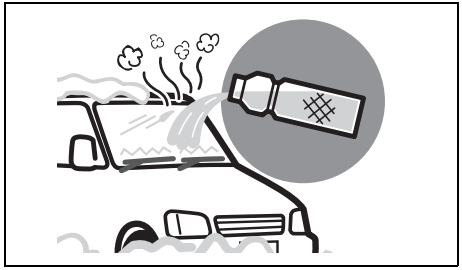

74TBX09052

Melt ice by pouring lukewarm water. After melting it, wipe off water to prevent refreezing. If you operate the wiper blades forcedly when ice stays freezing, the wiper rubbers may be damaged and the wiper blades may be broken.

Snow and Frost on the Window Glasses

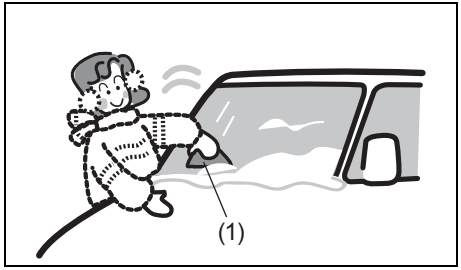

74TBX09053

Use the plastic board (1). You can remove snow and frost not to damage the window glasses.

- For vehicle equipped with Dual Sensor Brake Support II (DSBS II), the Dual Sensor Brake Support II (DSBS II) may not operate properly when there is snow or frost on the windshield.

Frozen Outside Rearview Mirrors

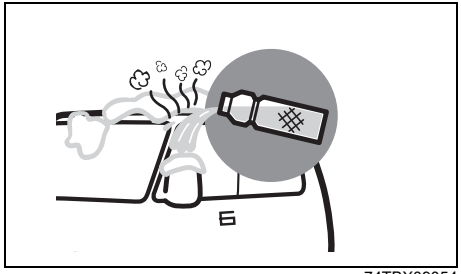

74TBX09054

Melt ice by pouring lukewarm water. After melting it, wipe off water to prevent refreezing. If you operate the outside rearview mirrors forcedly when ice stays freezing, the outside rearview mirrors may be broken.

NOTICE

- **For the outside rearview mirror folding switch, check if you can move the mirrors by your hands first. Then, operate the switch. If you repeat to operate the switch when ice stays freezing, the mirrors may be broken.**
- **For the remote folding mirrors, deactivate the function of the remote folding mirrors in the cold condition where the outside rearview mirrors are frozen. If you repeat to operate them when ice stays freezing, the mirrors may be broken.**

Frozen Doors

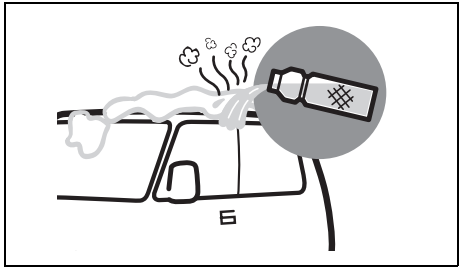

74TBX09055

Pour lukewarm water except the keyhole on the door. After opening the door, wipe off water. If you open the door forcedly when ice stays freezing, the rubbers around the door may be come off and broken.

Snow Attaching to Shoes

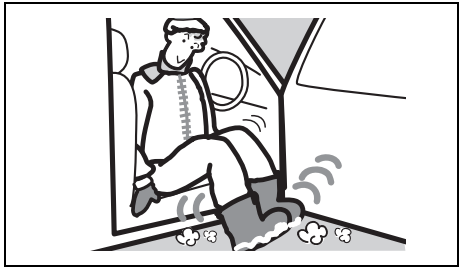

74TBX09056

Remove snow attaching to shoes before getting in your vehicle. If you do not remove it, you may slip when operating the pedals and the window glasses may mist easily because of high humidity inside the vehicle.

When Parking the Vehicle Outside



74TBX09057

For vehicle equipped with Dual Sensor Brake Support II (DSBS II), the Dual Sensor Brake Support II (DSBS II) may not operate properly when there is snow or frost on the windshield.

NOTICE

- **If you park the vehicle under eaves or trees, the roof of the vehicle may be dented by accumulated snow or fallen snow.**
  When it is snowing, do not park the vehicle under eaves or trees.
- **If you park the vehicle outside when it is snowing, the wiper arms may be deformed or the wiper blades may be frozen on the windshield by snow weight. Raise the wiper arms away from the windshield when parking the vehicle.**

MEMO

EMERGENCY SERVICE

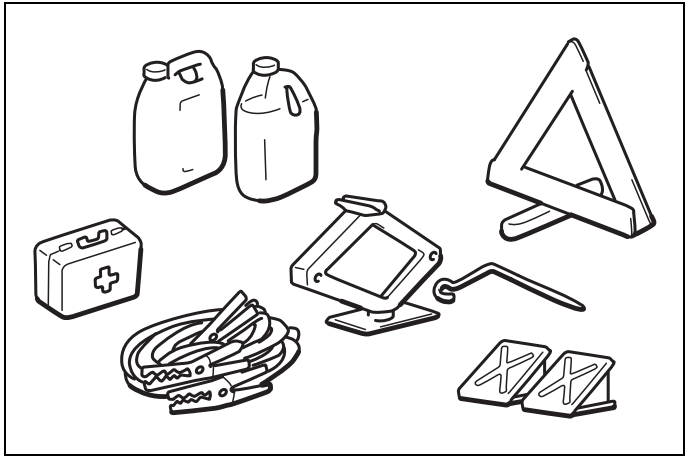

60G411

Towing by Tow Truck 10-1
Towing by Using Towing Eye 10-2
Tyre Changing Tool 10-6
Jacking Instructions 10-8
Running Out of Battery 10-12
Jump-starting Instructions 10-13
If You Get a Flat Tyre While Driving 10-14
Engine Trouble: Starter Does not Operate 10-15
Engine Trouble: Does not Start 10-15
Engine Trouble: Overheating 10-15
Warning Triangle 10-16

Towing by Tow Truck

If you need to have your vehicle towed, contact a professional service. An authorized SUZUKI dealer or a qualified workshop can provide you with detailed towing instructions.

⚠ WARNING

For vehicles equipped with the Dual Sensor Brake Support II (DSBS II), if your vehicle is towed with the engine on, press the Dual Sensor Brake Support II (DSBS II) OFF switch and turn off the Dual Sensor Brake Support II (DSBS II). If not, an accident related to the system being turned on may occur.

NOTICE

To help avoid damage to your vehicle during towing, proper equipment and towing procedures must be used.

2-wheel Drive (2WD) Automatic Transmission

Automatic transmission vehicles may be towed using either of the following methods.

- Being towed from the front:
  Lift the front wheels and keep the rear wheels on the ground or lift the front wheels and place a dolly under the rear wheels. Before the vehicle is towed, make sure that the parking brake is released.
- Being towed from the rear:
  Lift the rear wheels and place a dolly under the front wheels.

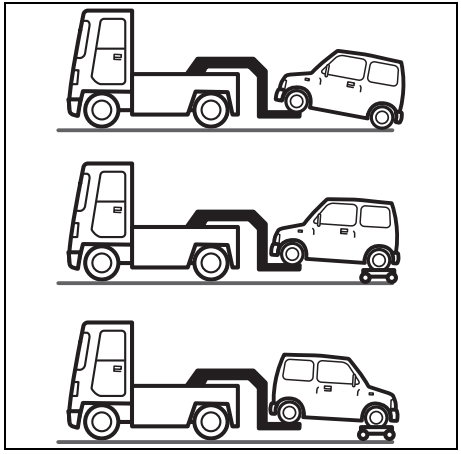

67T00160

NOTICE

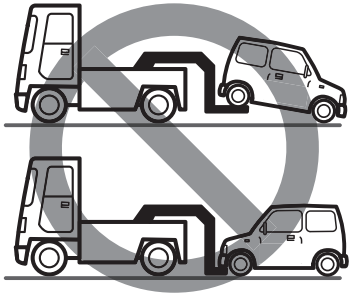

67T00158

If your vehicle is towed with the front wheels on the ground, it can result in damage to the automatic transmission.

(Continued)

NOTICE

(Continued)

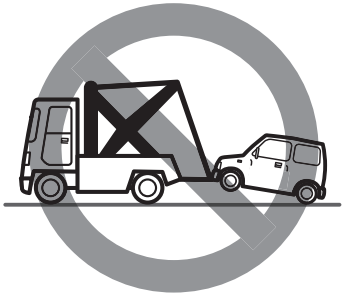

59RN100010

Towing a vehicle with a sling-type truck as shown in the figure may cause damage to the bumper or body. Do not tow a vehicle with a sling-type truck.

- There is also a way to use a vehicle transportation car to move a malfunctioning vehicle.
- If the vehicle does not start even if the engine is running, or if it makes a different sound than usual, it could be a failure of the drive-train. Consult with an authorized SUZUKI dealer or a qualified workshop before towing.

Towing by Using Towing Eye

⚠ WARNING

For vehicle equipped with the Dual Sensor Brake Support II (DSBS II), if your vehicle is towed with the engine on, press the Dual Sensor Brake Support II (DSBS II) OFF switch and turn off the Dual Sensor Brake Support II (DSBS II). If not, an accident related to the system being turned on may occur.

Hanging Point of a Towing Cable

Hang a towing cable on a towing eye. The towing eye is provided on the front of the vehicle for use in emergency situations or sea shipping purposes.

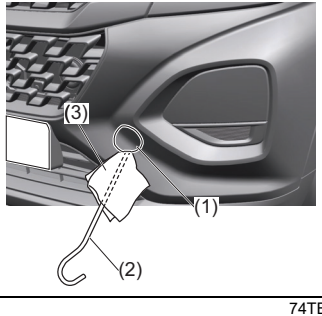

74TBX10001

1) Remove the cover (1) by using a jack handle (2) covered with a soft cloth (3) as shown in the illustration.

NOTICE

Do not apply excessive force as it may damage the cover strap.

NOTE:
We recommend that you fasten the cover with tape to prevent damage during towing.

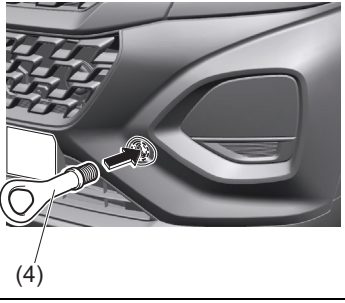

74TBX10002

2) Install the towing eye (4) by hand.

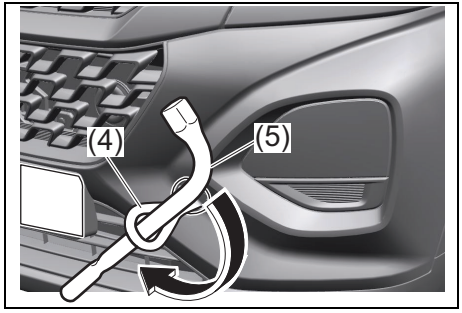

74TBX10003

3) To tighten the towing eye (4), turn it clockwise by using a wheel wrench (5) until the towing eye (4) is securely installed.

NOTICE

- **Observe the following instructions when using the towing eye (4). Otherwise, the towing eye or the vehicle body may break and cause serious injury or damage:**
  - **– Avoid pulling the vehicle to get out of severe snowy, muddy or sandy conditions.**
  - **– Avoid sudden starts or erratic driver performance which could cause excessive stress on the towing eye.**

  In such cases, we recommend that you contact a professional service.
- **Do not use the towing eye (4) for towing another vehicle or transporting your vehicle by a car carrier trailer, etc.**

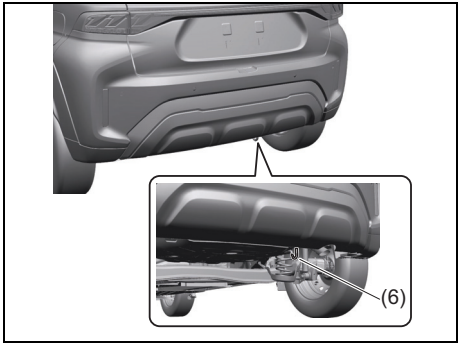

74TBX10004

NOTICE

- **Your vehicle was originally designed to carry people and a normal amount of cargo, not to tow a trailer.**
- **The frame hook (6) is provided on the rear of the vehicle for use in emergency situations and sea shipping purposes only. Do not use the frame hook for towing another vehicle, being towed by another vehicle or transporting your vehicle by a car carrier trailer, etc. Otherwise, the frame hook or the vehicle body may break and cause serious injury or damage.**

Other Holes

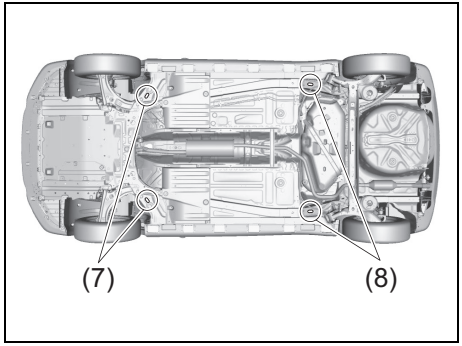

74U101001

The frame holes (7) and (8) are provided only for transporting by a car carrier trailer.

⚠ WARNING

Do not use the frame holes (7) and (8) for towing purpose. These holes may break and cause serious injury or damage.

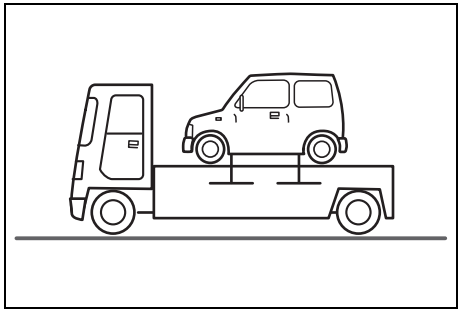

67T00163

When using ropes to secure the vehicle, refer to the above figure.

⚠ CAUTION

Do not tighten the rope excessively. The vehicle may be damaged.

Towing by Using a Rope

1) Hang a towing cable on a towing eye horizontally, so that the hanging side would be the same for the towing vehicle and the towed vehicle if possible.

2) Keep the engine running.
   - When you cannot start the engine, press the engine switch to change the ignition mode to the position other than LOCK (OFF).
   - Turn the steering wheel to left and right to check that the steering lock is released.
   - For the vehicle with SUZUKI SAFETY SUPPORT, when the ignition mode is ON, press the Dual Sensor Brake Support II (DSBS II) OFF switch and turn off the Dual Sensor Brake Support II (DSBS II).

⚠ WARNING

If you drive the vehicle without the engine running, it may cause an accident.
When your vehicle is towed by using a rope, observe the following instructions.
- **Do not press the engine switch to change the ignition mode to LOCK (OFF). Otherwise, the steering wheel will be locked and not be turned.**
- **Depress the brake pedal more firmly than usual, as the brake booster does not work.**
- **Operate the steering wheel with more force, as the power steering system does not work.**

NOTICE

If you cannot release the steering lock, you cannot operate the steering wheel and it may cause an accident. If you cannot release the steering lock because of malfunction and running out of the lead-acid battery, do not perform towing by using a rope.

3) Shift the gearshift lever into "N".

NOTE:
- *If you cannot shift the gearshift lever into "N", towing by using a towing cable is not possible. Consult an authorized SUZUKI dealer or a qualified workshop.*
- *If you cannot shift the gearshift lever from "P" to the other position with the engine running and the brake pedal depressed, because of malfunction and running out of the lead-acid battery, cancel the shift lock system referring to "If You cannot Shift Automatic Transmission Gearshift Lever out of "P" (PARK)" in the "OPERATING YOUR VEHICLE" section.*

4) During towing, make sure that a towing cable is not slack. To avoid a collision, carefully drive your vehicle checking the brake lights of the front vehicle.
   - To warn the driver of a following vehicle, turn on the hazard warning lights of the towed vehicle.

⚠ WARNING

If you continuously depress the brake pedal on a long or steep downhill slope, the brakes could overheat and become ineffective.
When there is a long or steep downhill slope, do not perform towing by a rope. Make a request of a tow truck.

NOTICE

- **If a strong impact is applied to a towing eye or a towing cable by sudden starting etc., the towing eye or the vehicle body may be damaged.**
  When the vehicle needs to be towed, do not apply a strong impact to a towing eye or a towing cable by sudden starting etc.
  Do not accelerate suddenly.
- **If the vehicle unavoidably needs to be towed by a rope, tow your vehicle on paved roads. Do not exceed the vehicle speed of 30 km/h (19 mph) and do not drive the vehicle for longer than 30 km (19 miles) to protect the transmission.**

Tyre Changing Tool

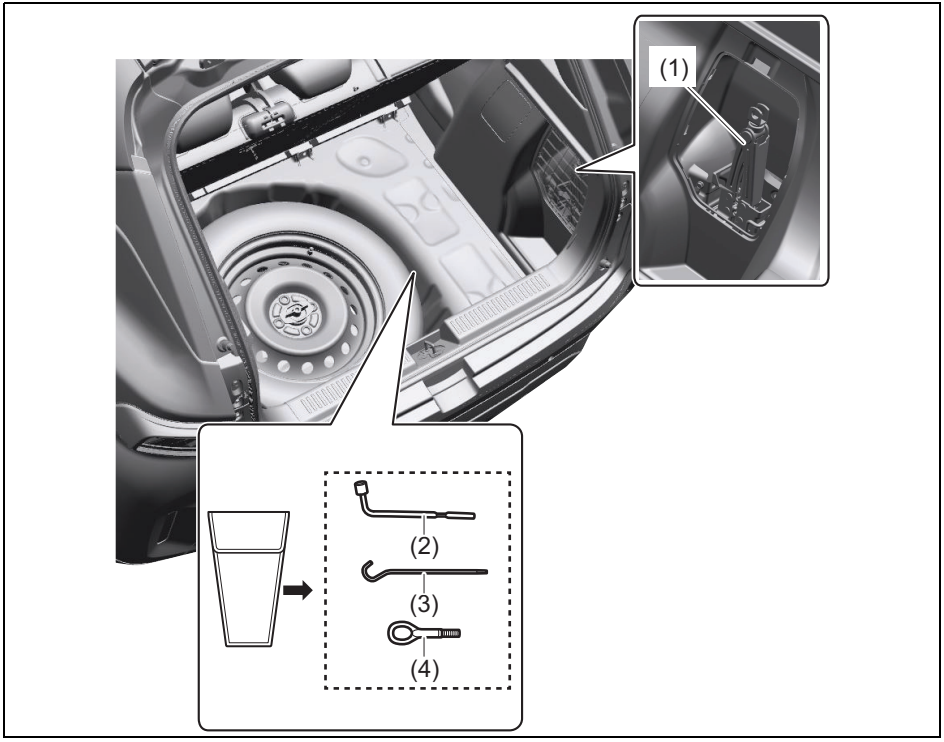

74U100004

(1) Jack
(2) Wheel wrench
(3) Jack handle
(4) Towing eye

The tyre changing tools are stowed in the luggage compartment.
Refer to “Luggage Compartment” in “QUICK GUIDE” section.

When using the jack, check that there is no deformation or damage on the jack.
Also, check that there is no dirt on the screw part and grease is applied on it.

The tyre changing tools are stowed in the luggage compartment, below luggage compartment boards.
To remove the luggage compartment board easily, lift the board from the hole provided on the board and pull it out.

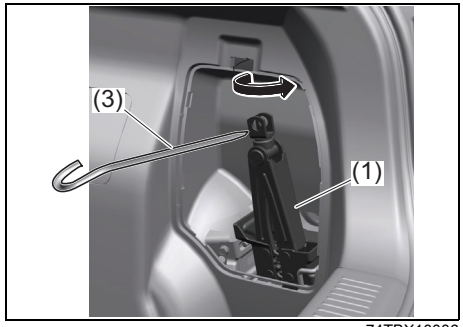

74TBX10006

To remove the jack (1), turn its shaft counterclockwise by using jack handle (3) and pull the jack out of the storage bracket.

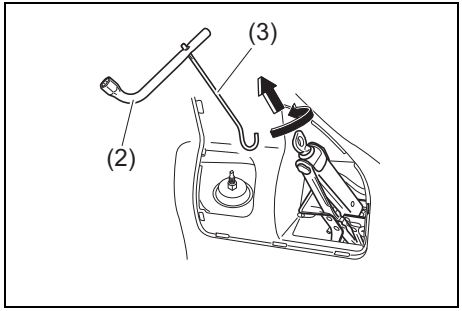

74TBX10007

NOTE:
If you are facing difficulty to use the jack handle (3) alone, use jack handle (3) and wheel wrench (2) together as shown in the illustration for removal of jack.

To stow the jack (1), place it in the storage bracket and turn the shaft clockwise until the jack is securely held in place.

NOTICE
To avoid damaging the storage bracket, do not expand the jack excessively.

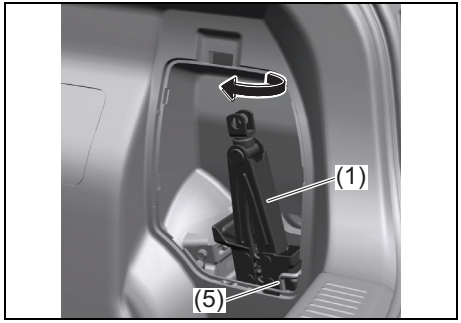

74U100001

To stow the jack (1), place it in the storage bracket (5) and turn the shaft clockwise with the hand.

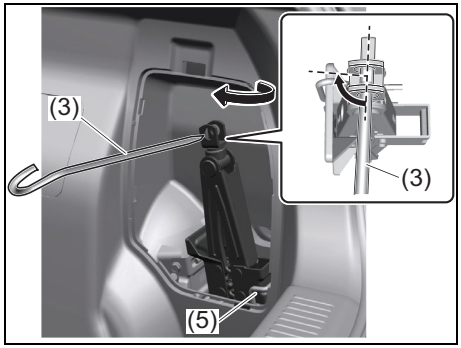

74U100002

After temporarily tightening the jack till it contacts the jacket holder bracket , turn the shaft approximately 90° to 180° by using jack handle (3) to securely hold the jack in place.

⚠ WARNING
After using the tyre changing tools, be sure to stow them securely or they can cause injury if an accident occurs.

⚠ CAUTION
The jack should be used only to change wheels. It is important to read the jacking instructions in this section before attempting to use the jack.

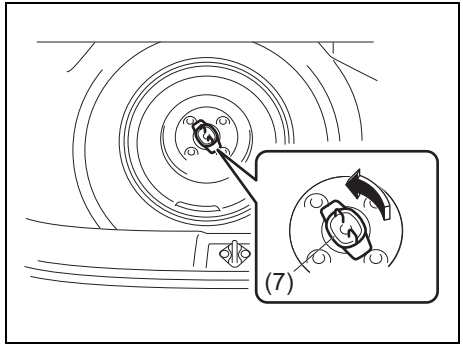

74TBX10010

To remove the spare tyre, turn the bolt (7) counterclockwise and remove it.

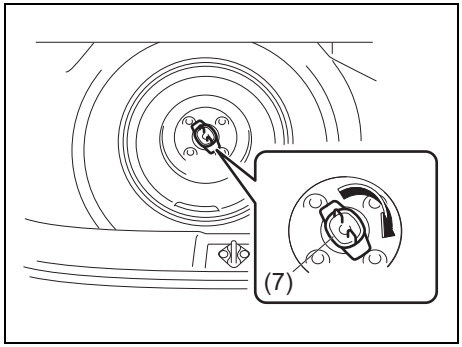

74TBX10011

Return the spare tyre back into the luggage compartment in the reverse order of removal and tighten its bolt (7) clockwise as shown in the above illustration.
While replacing tyre with alloy wheel make sure to remove the wheel cap before keeping the tyre in the trunk.

NOTICE

Make sure that the spare tyre is fixed securely on the floor. Loosely fixed tyre may cause noise during driving and damage paint on vehicle body.

Jacking Instructions

1) Place the vehicle on level, hard ground.

⚠ WARNING

- **Shift into "P" (Park) when you jack up the vehicle.**
- **Never jack up the vehicle with the transmission in "N" (Neutral). Otherwise, unstable jack may cause an accident.**

2) Turn on the hazard warning switch if your vehicle is near traffic.

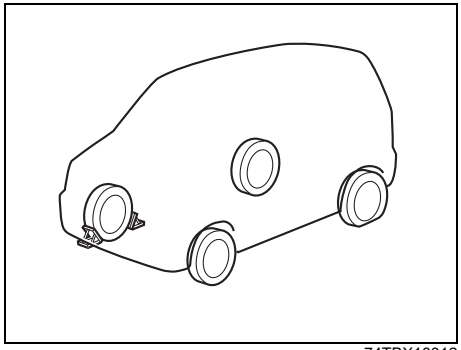

74TBX10012

3) Block the front and rear of the wheel diagonally opposite to the wheel being lifted.

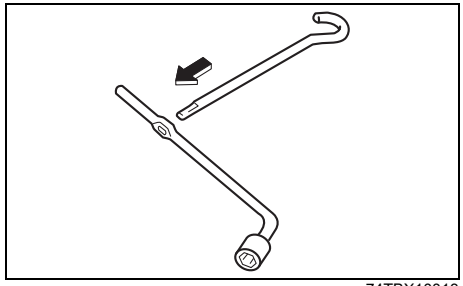

74TBX10013

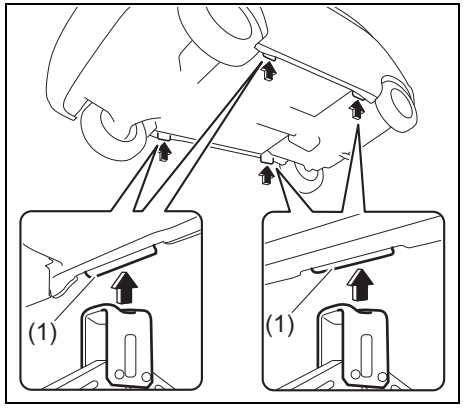

74TBX10014

4) Position the jack at an angle as shown in the illustration and raise the jack by turning the jack handle clockwise until the jack-head groove fits around the jacking bar boss (1)beneath the vehicle body.

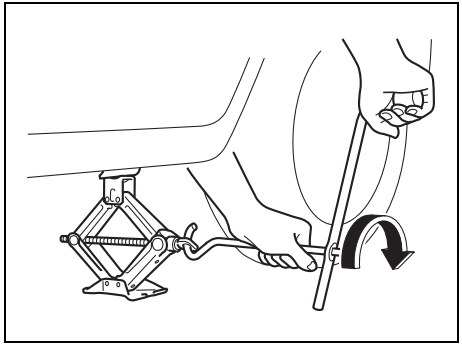

74TBX10015

5) Continue to raise the jack slowly and smoothly until the tyre clears the ground. Do not raise the vehicle more than necessary.

⚠ WARNING

- **Use the jack only to change wheels on level, hard ground.**
- **Never jack up the vehicle on an inclined surface.**
- **Never raise the vehicle with the jack in a location other than between the frame bosses near the wheel to be changed.**
- **Make sure that the jack is raised at least 25 mm (1 inches) before it contacts the boss. Use of the jack when it is within 25 mm (1 inches) of being fully collapsed may result in failure of the jack.**
- **Do not use wooden blocks or similar objects as a jack underlay.**
- **No person should place any portion of their body under a vehicle that is supported by a jack. Never place your hands or feet under the raised vehicle when it is supported by a jack.**
- **Never run the engine when the vehicle is supported by the jack and never allow passengers to remain in the vehicle.**

Raising Vehicle with Garage Jack

- Apply the garage jack to one of the points indicated below.
- Always support the raised vehicle with jack stands (commercially available) at the points indicated below.

(1) Front
(2) Rear
(3) Jack stand
(4) Garage jack
(5) Jacking point for garage jack

⚠ WARNING

As the vehicle may get damaged or an accident may occur, observe the following points.

- **Observe the designated points shown in the illustrations.**
- **When holding the lifted vehicle, use the rigid rack.**
- **When jacking up the front side or the rear side only, place a chock (commercially-available product) on front and back of the grounded tyre.**

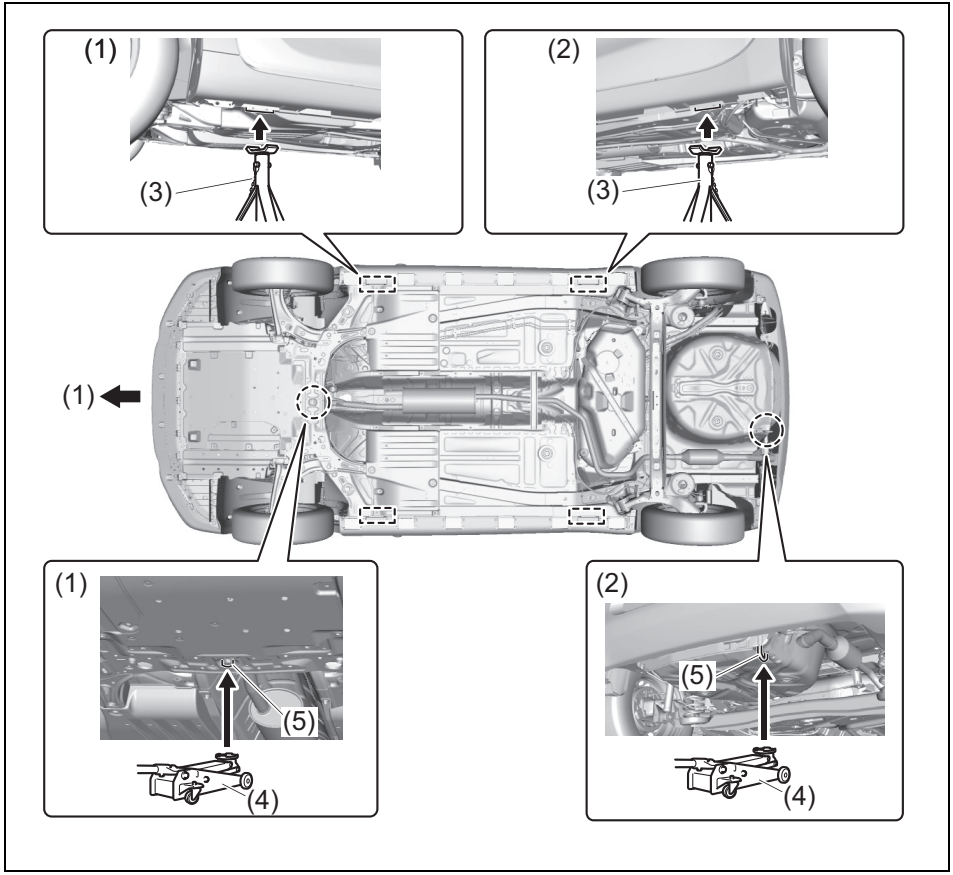

74TBX10016

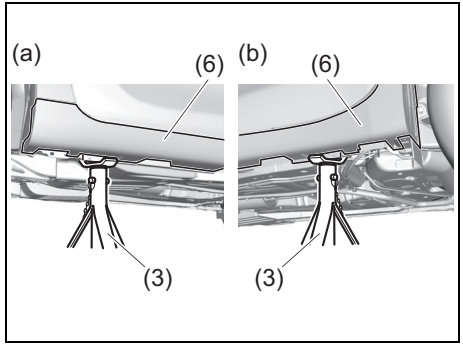

74U100003

(a) Specified position of jack stand for the front side
(b) Specified position of jack stand for the rear side

NOTICE

If you use the jack stand (3) in the condition that it touches the side skirt (6), the side skirt may be broken or damaged.
When using the jack stand, make sure that it does not touch the side skirt.

NOTE:
For more details, consult an authorized SUZUKI dealer or a qualified workshop.

Changing Wheels

⚠ WARNING

Never change a wheel in traffic lane. Always move the vehicle off the road on level, hard ground away from traffic for changing a wheel. For any further assistance contact your nearest authorized SUZUKI dealer or a qualified workshop.

To change a wheel, use the following procedure:
1) Prepare the jack and tools.
2) Loosen, but do not remove the wheel nuts.
3) Jack up the vehicle (follow the jacking instructions in this section).

⚠ WARNING

- **Never jack up the vehicle with the transmission in "N" (Neutral). Otherwise, unstable jack may cause an accident.**

⚠ CAUTION

Immediately after the vehicle has been driven, the wheels, the wheel nuts and the area around the brakes might be extremely hot. Touching these areas may cause burn injury Do not touch these areas, immediately after the vehicle has been driven.

4) Remove the wheel nuts and wheel.

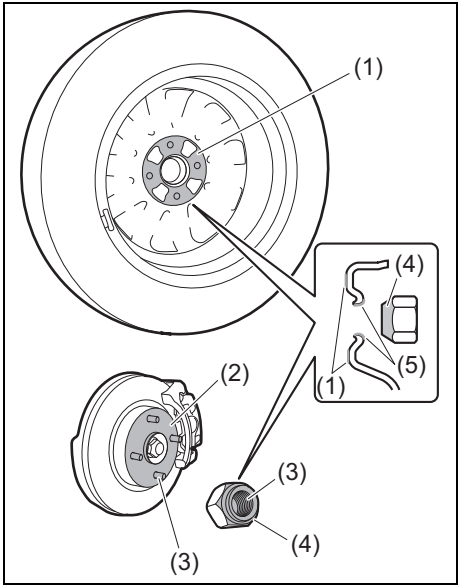

74TBX10018

5) Clean any mud or dirt off from the surface of the wheel (1), hub (2), thread part (3) and surface of the wheel nuts (4) and surface of the wheel holes (5) with a clean cloth. Clean the hub carefully; it may be hot from driving.
6) Install the new wheel and replace the wheel nuts with their cone shaped end facing the wheel. Tighten each nut snugly by hand until the wheel is securely seated on the hub.

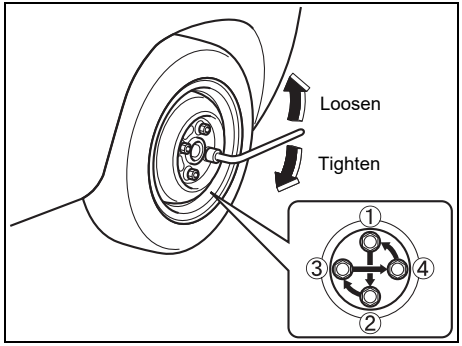

74TBX10019

Tightening torque for wheel nuts
100 Nm (10.2 kg-m, 74.0 lb-ft)

7) Lower the jack and fully tighten the nuts with a wrench in numerical order as shown in the illustration.

⚠ WARNING

Use genuine wheel nuts and tighten them to the specified torque as soon as possible after changing wheels. Incorrect wheel nuts or improperly tightened wheel nuts may come loose or fall off, which can result in an accident. If you do not have a torque wrench, have the wheel nut torque checked by an authorized SUZUKI dealer or a qualified workshop.

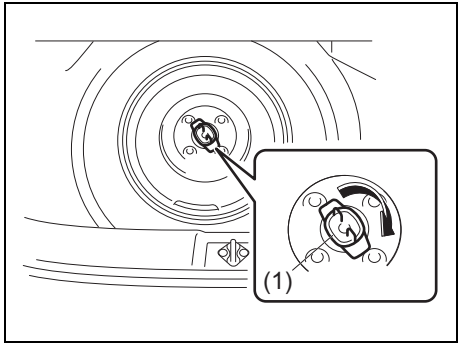

74TBX10020

Return the spare tyre back into the luggage compartment in the reverse order of removal and tighten its bolt (1) clockwise as shown in the above illustration.

NOTICE

Make sure that the spare tyre is fixed securely on the floor. Loosely fixed tyre may cause noise during driving and damage paint on vehicle body.

Running Out of Battery

In the following cases, the lead-acid battery is running out.

- The starter does not engage when attempting to turn on the engine. Or, the starter rotation is too weak to make the engine start.
- The headlight illumination is extremely low or the horn volume is low.

Jump-starting Instructions

⚠ WARNING

- **Never attempt to jump-start your vehicle if the lead-acid battery appears to be frozen. Batteries in this condition may explode.**
- **When making jump lead connections, check that your hands and the jump leads remain clear from pulleys, belts or fans.**
- **Lead-acid batteries produce flammable hydrogen gas. Keep flames and sparks away from the battery or an explosion may occur. Never smoke when working near the battery.**
- **If the booster battery you use for jump-starting is installed in another vehicle, check that the two vehicles are not touching each other.**
- **If your lead-acid battery discharges repeatedly, for no apparent reason, have your vehicle inspected by an authorized SUZUKI dealer or a qualified workshop.**
- **To avoid harm to yourself or damage to your vehicle or battery, follow the jump-starting instructions below.**
  If you are in doubt, call for qualified road service.

NOTICE

Your vehicle should not be started by pushing or towing. This starting method could result in permanent damage to the catalytic converter. Use jump leads to start a vehicle with a weak or flat battery.

1) Use only a 12-volt lead-acid battery to jump-start your vehicle. Position the good 12-volt lead-acid battery close to your vehicle so that the jump leads will reach both batteries. When using a battery installed on another vehicle, check that two vehicles do not touch each other. Set the parking brakes fully on both vehicles.
2) Turn off all vehicle accessories, except those necessary for safety reasons (for example, headlights or hazard lights).

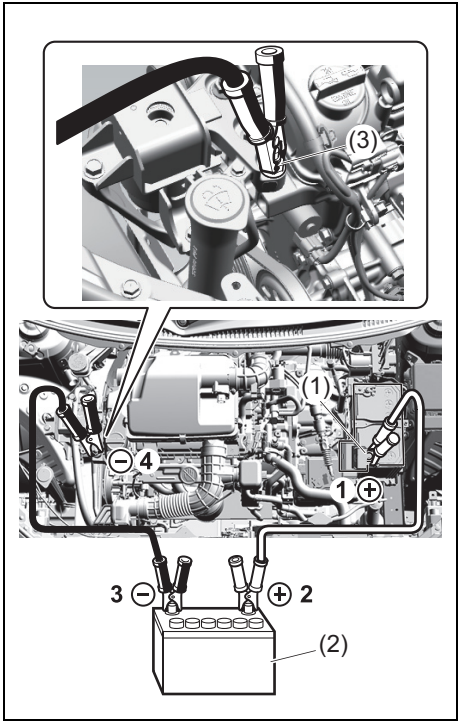

74U100006

3) Connect jump leads as follows:
   1. Connect one end of the first jump lead to the positive (+) terminal of the discharged battery (1).

2. Connect the other end to the positive (+) terminal of the booster battery (2).
3. Connect one end of the second jump lead to the negative (–) terminal of the booster battery (2).
4. Make the final connection to an unpainted, heavy metal part (i.e. engine mount bolt (3)) of engine cylinder head in the vehicle with the discharged battery (1).

⚠ WARNING

Never connect the jump lead directly to the negative (–) terminal of the discharged battery, or an explosion may occur.

⚠ CAUTION

Connect the jump lead to the engine mount bolt securely. If the jump lead disconnects from the engine mount bolt because of vibration at the start of the engine, the jump lead could be caught in the drive belts.

4) If the booster battery you are using is fitted to another vehicle, start the engine of the vehicle with the booster battery. Run the engine at moderate speed.
5) Start the engine of the vehicle with the discharged battery.
6) Remove the jump leads in the exact reverse order in which you connected them.

If You Get a Flat Tyre While Driving

Firmly hold the steering wheel and carefully apply the brakes to slow down the vehicle and stop it in a safe place.

Engine Trouble: Starter Does not Operate

1) Try turning the ignition mode to START with the headlights turned on to determine the lead-acid battery condition. If the headlights go excessively dim or go off, it usually means that either the lead-acid battery is discharged or the battery terminal contact is poor. Recharge the lead-acid battery or correct battery terminal contact as necessary.
2) If the headlights remain bright, check the fuses. If the reason for failure of the starter is not obvious, there may be a major electrical problem. Have the vehicle inspected by an authorized SUZUKI dealer or a qualified workshop.

Engine Trouble: Does not Start

Make sure that your vehicle has enough fuel and battery.
If the engine does not start under very cold condition, press the accelerator pedal all the way to the floor and hold it while cranking the engine.
Refer to “Starting / Stopping Engine (Vehicle without Keyless Push Start System) (if equipped)” or “Starting / Stopping Engine (Vehicle with Keyless Push Start System) (if equipped)” in “OPERATING YOUR VEHICLE” section.
If the engine still does not start have your vehicle inspected at an authorized SUZUKI dealer or a qualified workshop.

- Do not operate the starter motor for more than 12 seconds.

NOTE:
If the engine refuses to start, the starter motor automatically stops after a certain period of time. After the starter motor has automatically stopped or if there is anything abnormal in the engine starting system, the starter motor runs only while the engine switch is held pressed.

Engine Trouble: Overheating

The engine could overheat temporarily under severe driving conditions. If the high engine coolant temperature warning light comes on as overheating or the engine coolant temperature gauge indicates overheating during driving:

1) Turn off the air conditioner.
2) Take the vehicle to a safe place and park.
3) Run the engine at a normal idle speed for a few minutes until the high engine coolant temperature warning light goes off or the indicator is within the normal, acceptable temperature range between “H” and “C”.

⚠ WARNING

If you see or hear escaping steam, stop the vehicle in a safe place and immediately turn off the engine to cool it. Do not open the hood when steam is present. When the steam can no longer be seen or heard, open the hood to see if the coolant is still boiling. If it is, you must wait until it stops boiling before you proceed.

If the high engine coolant temperature warning light does not go off or the temperature indication does not come down to within the normal, acceptable range:

1) Turn off the engine and check that the water pump belt and pulleys are not damaged or slipping. If any abnormality is found, correct it.
2) Check the coolant level in the reservoir. If it is found to be lower than "LOW" line, check radiator, water pump, radiator hoses and heater hoses for leakage. If leakage that may cause overheating is found, do not run the engine until these problems have been corrected.
3) If leakage is not found, carefully add coolant to the reservoir and then the radiator, if necessary. (Refer to "Engine coolant" in "INSPECTION AND MAINTENANCE" section.)

NOTE:
If engine overheats and you are not sure what to do, contact an authorized SUZUKI dealer or a qualified workshop.



74TBX10024

⚠ WARNING

- **It is hazardous to remove the radiator cap when the water temperature is high, because scalding fluid and steam may be blown out under pressure. The cap should only be taken off when the coolant temperature has lowered.**
- **To help prevent personal injury, keep hands, tools and clothing away from the engine cooling fan and air-conditioner fan. These electric fans can automatically turn on without warning.**

Warning Triangle

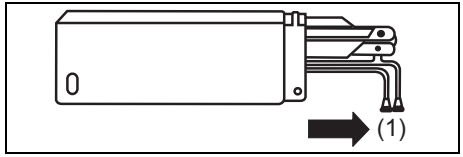

74TBX10025

In case of vehicle break-down or during emergency stopping, where, your vehicle could become a potential traffic hazard, keep the warning triangle, provided with your vehicle, on the road free from any obstacles behind your vehicle so as to warn the approaching traffic, at an approximate distance of 50-100 m. The reflecting side of the triangle should face the oncoming traffic. Please activate the hazard warning lamps before alighting the vehicle to keep the warning triangle.

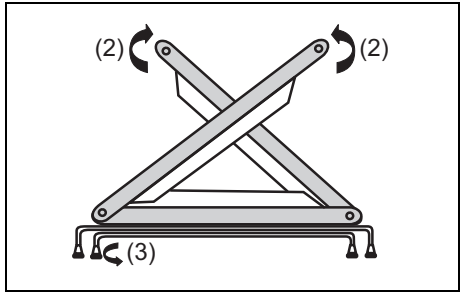

74TBX10026

- Remove the warning triangle carefully from the cover as shown by arrow (1).
- Open both the reflector arms as shown by arrow (2) and lock the arms with each other with the clip provided in the right arm. Open the bottom stand in counter clock-wise direction as shown by arrow (3). Position the warning triangle behind the vehicle on a plain surface.
- Reverse the removal procedure for keeping inside the cover.

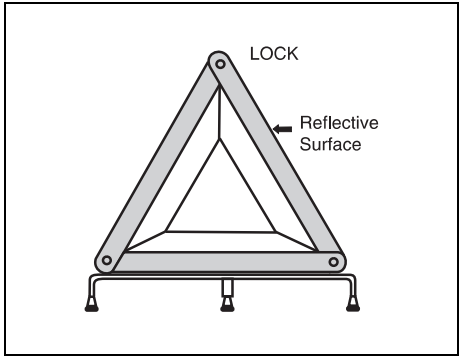

74TBX10027

APPEARANCE CARE

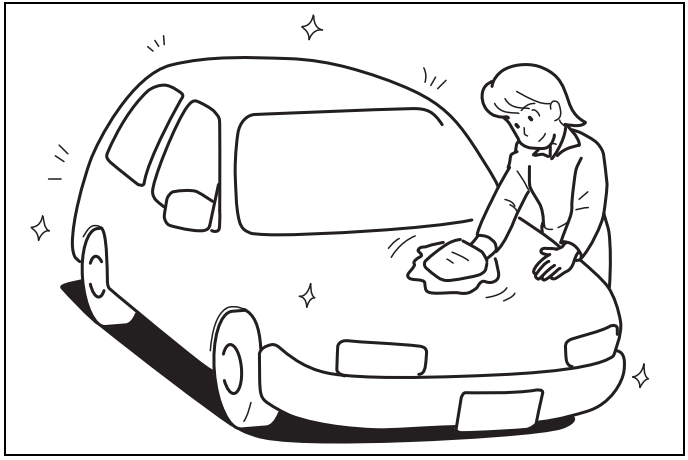

60G412

Corrosion Prevention **11-1**
Cleaning Exterior **11-2**
Cleaning Interior **11-7**

Corrosion Prevention

It is important to take good care of your vehicle to protect it from corrosion. Listed below are instructions for how to maintain your vehicle to prevent corrosion. Please read and follow these instructions carefully.

Important Information about Corrosion

Common causes of corrosion

1) Accumulation of road salt, dirt, moisture or chemicals in hard-to-reach areas of the vehicle underbody or frame.
2) Chipping, scratches and any damage to treated or painted metal surfaces resulting from minor accidents or abrasion by stones and gravel.
3) Any or all of the below mentioned points:

- Continuous exposure to sunlight
- Hard water & sea water coming in contact with vehicle.
- Foot rubbing (skirting).

Environmental conditions which accelerate corrosion

1) Road salt, dust control chemicals, sea breeze or industrial pollution will all accelerate the corrosion of metal.
2) High humidity will increase the rate of corrosion particularly when the temperature range is just above the freezing point.
3) Moisture in certain areas of a vehicle for an extended period of time may promote corrosion even when other body sections are completely dry.
4) High temperatures will cause an accelerated rate of corrosion to parts of the vehicle which are not well-ventilated to permit quick drying.

This information illustrates the necessity of keeping your vehicle (particularly the underbody) as clean and dry as possible. It is equally important to repair any damage to the paint or protective coatings as soon as possible.

How to Help Prevent Corrosion

Wash your vehicle frequently

The best way to preserve the finish on your vehicle and to help avoid corrosion is to keep it clean with frequent washing.
Wash your vehicle at least once during the winter and once immediately after the winter. Keep your vehicle, particularly the underside, as clean and dry as possible.
If you frequently drive on salted roads, your vehicle should be washed at least once a month during the winter. If you live near the ocean, your vehicle should be washed at least once a month throughout the year.
For washing instructions, refer to “Cleaning Exterior” section.

Remove foreign material deposits

Foreign materials such as salts, chemicals, road oil or tar, tree sap, bird droppings and industrial fall-out may damage the finish of your vehicle if it is left on painted surfaces. Remove these types of deposits as quickly as possible. If these deposits are difficult to wash off, an additional cleaner may be required. Check that any cleaner you use is not harmful to painted surfaces and is specifically intended for your purposes. Follow the manufacturer’s directions when using these special cleaners.

Repair finish damage

Carefully examine your vehicle for damage to the painted surfaces. Should you find any chips or scratches in the paint, touch them up immediately to prevent corrosion from starting. If the chips or scratches have gone through to the bare metal, have a qualified body shop make the repair.

Keep passenger and luggage compartments clean

Moisture, dirt or mud can accumulate under the floor mats and may cause corrosion. Occasionally, check under these mats to ensure that this area is clean and dry. More frequent checks are necessary if the vehicle is used for off-road driving or in wet weather.

Certain cargos such as chemicals, fertilizers, cleaners, salts, etc. are extremely corrosive by nature. These products should be transported in sealed containers. If they are spilled or leaked, clean and dry the area immediately.

Park your vehicle in a dry, well-ventilated area
Park your vehicle to save it from continuous exposure to direct sunlight. Do not park your vehicle in a damp, poorly-ventilated area. If you often wash your vehicle in the garage and place it there in wet condition, your garage may be damp. The high humidity in the garage may cause or accelerate corrosion. A wet vehicle may corrode even in a heated garage if the ventilation is poor.

⚠ WARNING

Do not apply additional undercoating or rust preventive coating on or around exhaust system components such as the catalytic converter and the exhaust pipes. It may catch a fire if the undercoating substance becomes overheated.

Cleaning Exterior

For Keeping the Paintwork Beautiful

To keep your vehicle's beautiful appearance for a long term, daily care is important.

- For parking and storing the vehicle, we recommend garages with good ventilation and locations with roofs.
- The following situations may cause rusting and discoloration of the paint. Wash your vehicle promptly.
  - – When driving in coastal areas or on roads sprayed with antifreeze agent (Wash the underside of the vehicle and around the wheel wells especially)
  - – When bird droppings, dead insects, sap, iron dust, soot or smoke residue, coal tar, etc., adhere to the paint or when the vehicle gets wet with acid rain
  - – When the vehicle is dirty with dust or mud
- Give the vehicle a wax about once a month or whenever the water-repelling ability of the painted surfaces has declined. Follow all instructions on the package of the wax (sold separately).

NOTE:
Do not use wax on plastic parts that are not coated. Waxing these surfaces could result in a whitened or uneven appearance.

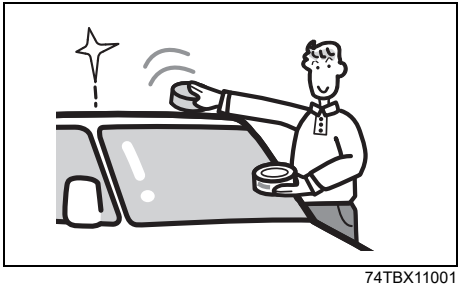

74TBX11001

- Chips from flying rocks, scratches, etc. can cause rust. Repair these areas as soon as possible.

NOTICE

- **When repairing scratches on painted surfaces, consult an authorized SUZUKI dealer or a qualified workshop. Using an inappropriate material for repair could cause damage to the paint.**
- **It is important that your vehicle be kept clean and free from dirt. Failure to keep your vehicle clean may result in fading of the paint or corrosion to various parts of the vehicle body.**

Washing

⚠ WARNING

- **Never attempt to wash and wax your vehicle with the engine running.**
- **When cleaning the underside of the body and fender, where there may be sharp-edged parts, wear gloves and a long-sleeved shirt to protect your hands and arms from being cut.**
- **After washing your vehicle, carefully test the brakes before driving to check that they have maintained their normal effectiveness.**

NOTICE



74TBX11002

- **When washing or waxing the vehicle, do not lean on the vehicle body or do not push it hard.**
  This might cause it to deform.

(Continued)

NOTICE

(Continued)

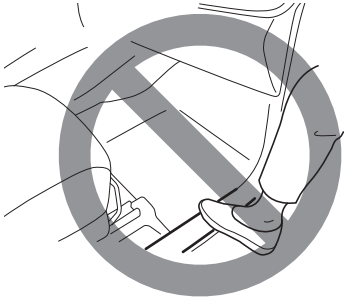

74U110001

- **When washing or waxing the vehicle, do not put your foot on the door opening.**
  This might cause it to damage.

Washing by hand

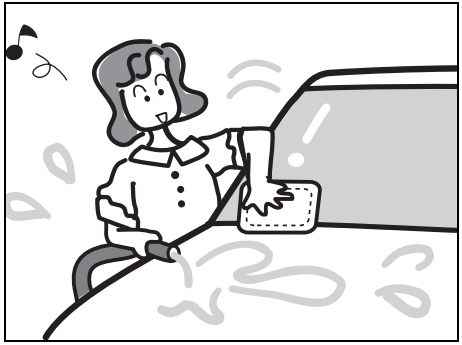

74TBX11004

When washing the vehicle, park it in the place where direct sunlight does not fall on it as much as possible and follow the instructions below:

1) Flush the underside of body and wheel housings with pressurized water to remove mud and debris. Use plenty of water.

NOTICE

When washing the vehicle:
- **Avoid directing steam or hot water of more than 80°C (176°F) on plastic parts.**
- **To avoid damaging engine components, do not use pressurized water in the engine compartment.**

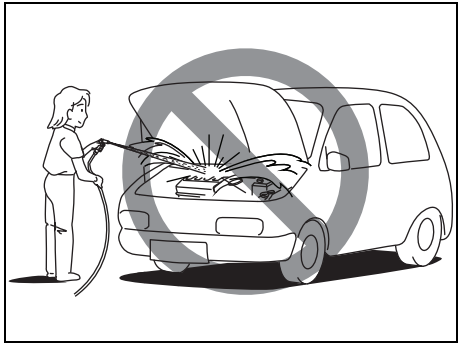

74TBX11005

2) Rinse the body to loosen the dirt. Remove dirt and mud from the body exterior with running water. You may use a soft sponge or brush. Do not use hard materials which can scratch the paint or plastic. Remember that the headlight covers or lenses are made of plastic in many cases.

NOTICE

To avoid damage to the paint or plastic surface, do not wipe the dirt off without ample water. Follow the above procedure.

3) Wash the entire exterior with a mild detergent or car wash soap using a sponge or soft cloth. The sponge or cloth should be frequently soaked in the soap solution.

NOTICE

When using a commercial car wash product, observe the cautions specified by the manufacturer. Never use strong household detergents or soaps.

4) Once the dirt has been completely removed, rinse off the detergent with running water.
5) Wipe off the vehicle body with a wet chamois or cloth and allow it to dry in the shade.
6) Check carefully for damage to painted surfaces. If there is any damage, touch up the damage following the procedure below:
   1. Clean all damaged spots and allow them to dry.
   2. Stir the paint and touch up the damaged spots lightly using a small brush.
   3. Allow the paint to dry completely.

Washing by an automatic car wash

NOTICE

- **If you use an automatic car wash, check that your vehicle's body parts, such as antenna, cannot be damaged. If you are in doubt, consult the car wash operator for advice.**
- **Do not wash a car with a roof end spoiler in an automatic car wash. It may get caught in the car wash and damage the spoiler.**
- **When washing the vehicle with a car wash machine (conveyor belt type, etc.) without shifting to the P position or stopping the vehicle, operate the Dual Sensor Brake Support II (DSBS II) OFF switch to stop the low speed brake support at a low speed (forward and backward).**
  Otherwise, the low speed brake support at a low speed (forward and backward) may unexpectedly activate, resulting in an accident.

Washing by a high-pressure cleaner

NOTICE

If you use a high-pressure cleaner, keep away the nozzle from your vehicle sufficiently.

- **Pointing the nozzle to the surrounding parts of camera can allow water to enter the camera.**
  This may cause a fire, malfunction, dew condensation, etc.
- **For vehicle with 360 view camera or rear view camera, do not point to the nozzle to the camera.**
- **Bringing the nozzle to your vehicle too close or pointing the nozzle to the opening of front grill or bumper etc. can cause damage and malfunction of the vehicle body and parts.**
- **Pointing the nozzle to door glasses and door frames can allow water to enter the cabin.**

Caring for the Windshield

If an oil film, etc. adheres to the windshield and the windshield wipers cannot clean it, use a glass cleaner (sold separately) to clean the windshield by hand.

Caring for Lights

Wash the lens part of light and wipe it off with a soft cloth.

NOTICE

- **Do not use the detergent including organic solvent on the lens surface of the light. The lens surface may be cracked.**
  If you use the detergent including organic solvent, rinse it off with ample water.
- **Do not wipe the lens surface by wax or a hard brush. This may damage the lens or hasten its deterioration.**

Caring for Cameras

Wash the lens part of camera and wipe it off with a soft cloth. If the lens part is very dirty, use a mild detergent.

NOTICE

- **Using alcohol, benzine, thinner etc. to wipe the camera may cause discoloration.**
  When you wipe the camera, do not use alcohol, benzine, thinner etc.
- **Hard coating is used for the lens of camera not to be easily scratched. However, if you use the brush for a vehicle, it may be difficult for you to see the image on the 360 view camera.**
  Be very careful not to scratch the lens.
- **The resin cover of the camera may be damaged if an organic solvent adheres to the camera.**
  Do not let organic solvent, body wax, oil film remover, or glass coating agent adhere to the product.
- **If the camera is subjected to a sudden temperature change, it may be damaged.**
  Do not expose the camera to sudden temperature changes such as melting frozen snow with hot water.

Caring for Aluminum Wheels

NOTE:

- *Do not use an acidic or alkaline detergent, or a cleaner containing petroleum solvent to wash aluminum wheels. These types of cleaners will cause permanent spots, discoloration and cracks on the finished surface and damage to the center cap.*
- *Do not use a bristle brush and a soap containing an abrasive material. These will damage the finished surface.*

Waxing

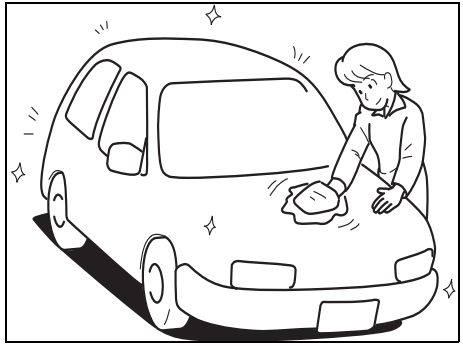

60G412

After washing the vehicle, waxing and polishing are recommended to further protect and beautify the paint.

- Only use waxes and polishes of good quality.
- When using waxes and polishes, observe the precautions specified by the manufacturers.

Cleaning Interior

- Clean out any dirt, sand, etc. using a vacuum cleaner, or wipe off the surfaces using a soft cloth moistened with cold or lukewarm water. If the interior is left dirty, scratches can occur.
- Quickly clean off any liquids such as those from air fresheners or spilled beverages by using tissue paper or a soft cloth. Leaving spilled liquids can cause staining, discoloration or cracking.

⚠ WARNING

Do not spray the interior with water or other liquids. If the navigation equipment, audio components, switches, wiring under the floor, or other electrical parts become wet, there is a risk of fire or malfunction, and the SRS airbag system could fail to function normally.
If you pour water or spill a drink in the vehicle, consult an authorized SUZUKI dealer or a qualified workshop as soon as possible for inspection.

NOTICE

- **Do not use chemical products containing the following ingredients. Doing so may cause staining, discoloration, deformation, or a deterioration in strength, etc.**
  - **– Solvents such as benzine, gasoline, thinner, or sticker peeling agents**
  - **– Acidic or alkaline detergents**
  - **– Bleaches or dyes**
- **Do not use chemical products that include silicone for cleaning the areas around the air conditioner, electronic equipment such as the audio or navigation systems or switches. Contact with silicone may cause them to malfunction.**
- **Do not leave colored leather goods, furs, vinyl articles, etc. in your vehicle for long periods. Doing so could cause discoloration or deformation of the interior.**

NOTE:
To prevent liquid-based air fresheners from spilling, it is recommended to fix their containers in place, or use solid-type air fresheners instead.

Vinyl Upholstery

Prepare a solution of soap or mild detergent dissolved in warm water. Apply the solution to the vinyl with a sponge or soft cloth and let it soak for a few minutes to loosen dirt.
Rub the surface with a clean, damp cloth to remove dirt and the soap solution. If some dirt still remains on the surface, repeat this procedure.

Fabric Upholstery

Remove loose dirt with a vacuum cleaner. Using a mild soap solution, rub stained areas with a clean damp cloth. To remove soap, rub the areas again with a cloth dampened with water. Repeat this until the stain is removed, or use a commercial fabric cleaner for tougher stains. If you use a fabric cleaner, carefully follow the manufacturer's instructions and precautions.

Leather Upholstery

Remove loose dirt with a vacuum cleaner. Using a mild soap or saddle soap solution, wipe dirt off with a clean damp soft cloth. To remove soap, wipe the areas again with a soft cloth dampened with water. Wipe the areas dry with a soft dry cloth. Repeat this until the dirt or stain is removed, or use a commercial leather cleaner for tougher dirt or stains. If you use a leather cleaner,

carefully follow the manufacturer's instructions and precautions. Do not use solvent type cleaners or abrasive cleaners.

NOTE:

- *In order to keep the leather upholstery looking good, it should be cleaned at least twice a year.*
- *If the leather upholstery becomes wet, immediately wipe it dry with a tissue paper or a soft cloth. Water may cause the leather to harden and shrink if it is not wiped off.*
- *When parking on sunny days, select a shady place or use a sunshade. If the leather upholstery is exposed to the direct sunlight for a long time, it may discolor and shrink.*
- *As is common with natural materials, leather is inherently irregular in grain and cowhide has spots in its natural state. These do not affect the performance of the leather in any way.*

Seat Belts

Clean seat belts with mild soap and water. Do not use bleach or dye on the belts. They may weaken the fabric of the belts.

Vinyl Floor Mats

Ordinary dirt can be removed from vinyl with water or the mild soap. Use a brush to help loosen dirt. After the dirt is loosened, rinse the mat thoroughly with water and dry it in the shade.

Carpets

Remove the dirt and soil as much as possible with a vacuum cleaner. Using a mild soap solution, rub stained areas with a clean damp cloth. To remove soap, rub the areas again with a cloth dampened with water. Repeat this until the stain is removed, or use a commercial carpet cleaner for tougher stains. If you use a carpet cleaner, carefully follow the manufacturer's instructions and precautions.

Inside of the windshield

When cleaning the inside of the windshield, protect the lens of the front camera from dust and glass cleaners.

Instrument Panel and Console

Remove loose dirt with a vacuum cleaner. Gently wipe dirt off with a tightly squeezed damp clean cloth. Repeat this until the dirt is removed.

NOTICE

Do not use chemical products that contain silicon to wipe electrical components such as the air conditioning system, audio, navigation system, or other switches. These will cause damage to the components.

Do not spray water or any liquid directly on instrument cluster or any other electrical or electronic components. This may cause damage and/or lead to non-functioning of the part.

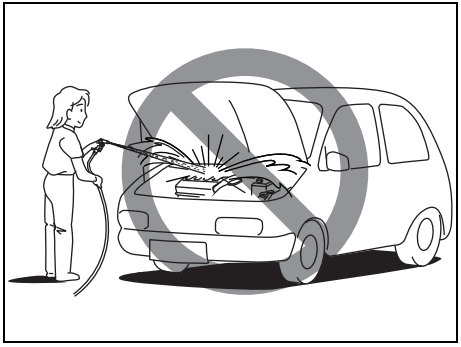

74TBX11005

NOTICE

- **Liquids such as liquid aromatics, soft drinks or juice may cause discoloration, wrinkles, and cracking to resin-based parts and textiles. Immediately wipe it dry with tissue paper or a soft cloth.**
- **Do not leave leather products with color, fur or vinyl products, etc. in your vehicle for long periods. It may cause discoloration or deterioration of interior.**

Inside of the Tailgate Window

NOTE:
Wipe the window along the antenna wires or heat wires by a soft cloth dampened with water to avoid damaging these wires.

Head-up Display

The surface of the display is coated, so please wipe off the dirt with a soft cloth like an eyeglass wipe.

NOTICE

- **Do not use a hard cloth or detergent as it may damage the display or the surface coating.**
- **Do not apply too much force when wiping the display or mirror, as it may damage it.**

SPECIFICATIONS

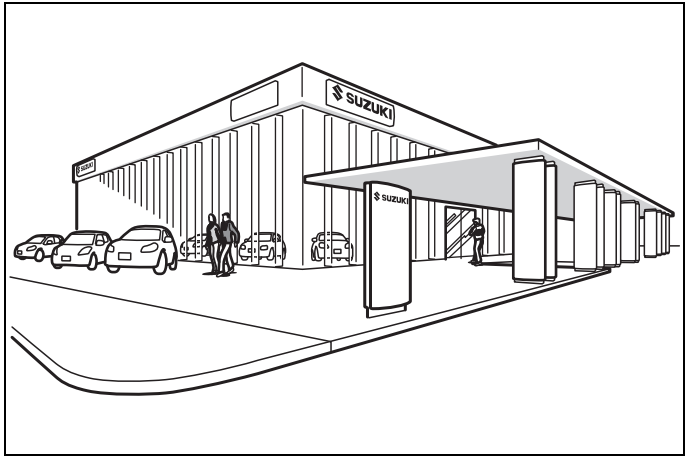

84MM01001

Vehicle Identification 12-1
Fuel Recommendation 12-2
Specifications 12-3

Vehicle Identification

Chassis Serial Number

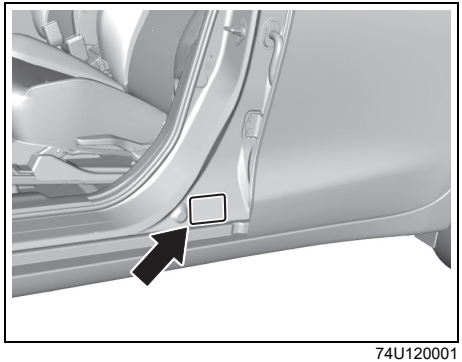

74U120001

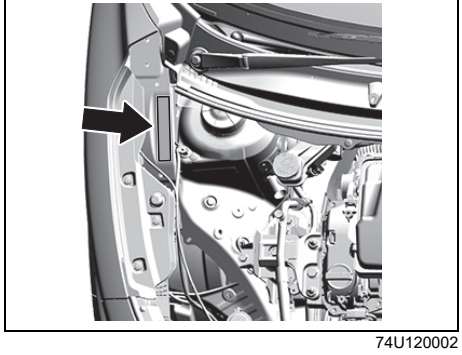

74U120002

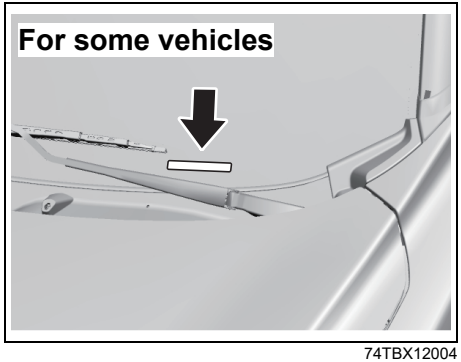

74TBX12004

The chassis and/or engine serial numbers are used to register the vehicle. They are also used to assist an authorized SUZUKI dealer or a qualified workshop when ordering or referring to special service information. Whenever you have occasion to consult an authorized SUZUKI dealer or a qualified workshop, remember to identify your vehicle with this number. Should you find the number difficult to read, you will also find it on the identification Label ID.

Engine Serial Number

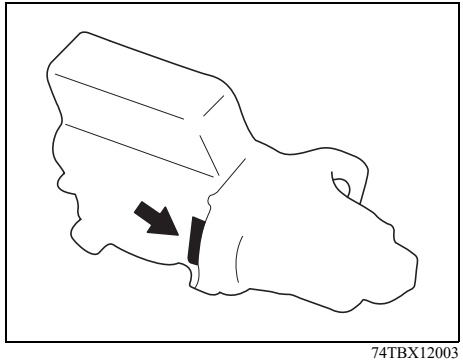

74TBX12003

The engine serial number is stamped on the cylinder block as shown in the illustration.

Fuel Recommendation

Petrol Engine
To avoid damaging catalytic converter, you must use unleaded petrol with an octane number (RON) of 91 or higher.

Gasoline/Ethanol blends
Blends of unleaded gasoline and ethanol (grain alcohol), also known as gasohol, are commercially available in certain areas. Blends of this type may be used in your vehicle if they are no more than 10% ethanol. Make sure this gasoline-ethanol blend has octane ratings no lower than those recommended for the gasoline.

NOTE:
If you are not satisfied with the driveability or fuel economy of your vehicle when you use a gasoline/alcohol blend, you should switch back to unleaded gasoline containing no alcohol.

Gasoline containing MTBE
Unleaded gasoline containing MTBE (methyl tertiary butyl ether) may be used in your vehicle if the MTBE content is not greater than 15%. This oxygenated fuel does not contain alcohol.

⚠ CAUTION

Use of spurious, low quality, adulterated fuel can cause damage to the engine and engine auxilliaries, affect functioning of engine and degrade engine performance including but not limited to engine seizure.

NOTICE

- **The fuel tank has an air space to allow for fuel expansion in hot weather. If you continue to add fuel after the filler nozzle has automatically shut off or an initial blowback occurs, the air chamber will become full. Exposure to heat when fully fuelled in this manner will result in leakage due to fuel expansion. To prevent such fuel leakage, stop filling after the filler nozzle has automatically shut off, or when initial vent blowback occurs, if using an alternative non-automatic system.**
- **Be careful not to spill fuel containing alcohol while refueling. If fuel is spilled on the vehicle body, wipe it up immediately. Fuels containing alcohol can cause paint damage, which is not covered under the New Vehicle Limited Warranty.**

NOTE:
- *For the Fuel Recommendation of Costa Rica and Panama models, refer to "For Costa Rica and Panama" in the "SUPPLEMENT" section.*
- *For the Fuel Recommendation of Bolivia and Peru models, refer to "For Bolivia and Peru" in the "SUPPLEMENT" section.*
- *For the Fuel Recommendation of Thailand models, refer to "For Thailand" in the "SUPPLEMENT" section.*

Specifications

NOTE:

Specifications are subject to change without notice.

ITEM: Dimensions		**UNIT: mm (in.)**
Overall length		3995 (157.3)
Overall width		1765 (69.5)
Overall height (Unladen)		1550 (61)
Wheelbase		2520 (99.2)
Track	Front*	1520 (59.8)
	Rear*	1530 (60.2)

*Same tyre in all variants.

ITEM: Engine		
Type	K15B	K15C
Number of cylinders	4	4
Bore	74.0 mm (2.91 in.)	74.0 mm (2.91 in.)
Stroke	85.0 mm (3.35 in.)	85.0 mm (3.35 in.)
Piston displacement	1462 cm3 (1462 cc, 89.2 cu.in)	1462cm3 (1462 cc, 89.2 cu.in)
Compression ratio	10.5 : 1	12.0 : 1

ITEM: Electrical	K15B	K15C
Standard spark plug	NGK KR6A-10	NGK ILZKR6Q11
Lead-acid battery	38B19L 20HR 35AH CCA 265A (JIS)	N55 20HR 42Ah CCA 370A (JIS)*1
Lithium-ion battery	-	Maintenance free*2
Fuses	See “INSPECTION AND MAINTENANCE” section.	

*1: Your vehicle is equipped with a lead-acid battery for exclusive use of the ENG A-STOP system.
When replacing the lead-acid battery, make sure to select the specified type for ENG A-STOP system. Consult an authorized SUZUKI dealer or a qualified workshop for replacing the lead-acid battery.
*2: If the lithium-ion battery or high voltage battery is completely discharged, the battery cannot be recharged. When replacing or disposing the lithium-ion battery or high voltage battery, consult an authorized SUZUKI dealer.

ITEM: Lights		WATTAGE	BULB No.
Headlight*1		LED	–
High mount stop light*1		LED	–
License plate light*1		LED	–
Daytime running light*1		LED	–
Position light*1		LED	–
Tail/brake light*1		LED	–
Rear reversing light*1		LED	–
Side turn signal light*1		LED	–
Turn Signal Light	Front*1	LED	–
	Rear*1	LED	–
Interior light	Front	12V 5W	W5W
	Center	12V 10W	C10W
	Luggage compartment	12V 5W	W5W
	Glove box light (if equipped)	12V 1.4 W	T5

If you need to replace the following bulbs indicated in the above table, consult an authorized SUZUKI dealer or a qualified workshop.
*1 Since the lights are non-disassemble type, you cannot replace a bulb. Replace the target assembly if any light is defective.

ITEM: Wheels and tyres		
Tyre size	195/60R16 89H*1	
Rim size	with aluminum wheels	16X6J
Spare*3	Tyre Size	195/60R16 89H*2
	Rim Size	16X6J
Tyre pressures	For the specified tyre pressure, see the tyre information label located on the driver's door lock pillar.	

*1: If you cannot prepare tyres with the specified load index rate and speed symbol, prepare tyres with higher load index rate and speed symbol.
*2: The spare wheel provided with Alloy wheel variant is steel wheel rim, hence follow 4 Tyre rotation only. (Refer section "INSPECTION AND MAINTENANCE")
*3: If applicable: The provision of different spare wheel is as per government notification/regulation (MORTH notification vide GSR 625 (E))

SPECIFICATIONS

The capacities listed below are approximate guide. The actual amount when replacing may differ.

ITEM: Recommended fuel / lubricants			Capacity
Fuel		See “Fuel Recommendation” in this section.	37 L (8.1 Imp gal)
Engine oil	K15B Engine	Classification: API SL, SM, SN or SP ILSAC GF-6 Viscosity: SAE 0W-20	3.1 L (5.5 Imp pt) (replacement with oil filter)
	K15C Engine	Classification: API SN or SP ILSAC GF-6 Viscosity: SAE 0W-16	3.3 L (5.8 Imp pt) (replacement with oil filter)
Engine coolant	K15B A/T	“SUZUKI LLC: Standard (Green) Coolant”	4.5 L (7.8 Imp pt) (Left Hand Drive Vehicle) 4.6 L (8.0 Imp pt) (Right Hand Drive Vehicle) (including reservoir tank)
	K15C A/T		4.6 L (8.0 Imp pt) (Left Hand Drive Vehicle) 4.7 L (8.2 Imp pt) (Right Hand Drive Vehicle) (including reservoir tank)
Automatic transmission oil	4AT	“SUZUKI AT OIL AW-1”	5.0 L (8.8 Imp pt)
	6AT	“SUZUKI AT OIL AW-1”	5.8 L (10.2 Imp pt)
Brake fluid		SAE J1703 or DOT3	Refill to the proper oil level according to the instructions in “INSPECTION AND MAINTENANCE” section.
Windshield washer fluid		–	2.0 L (3.5 Imp gal)

SUPPLEMENT

For Thailand 13-1

For Thailand

Fuel

To avoid damaging catalytic converter, you must use unleaded gasoline with an octane number (RON) of 91 or higher.
This is identified by a label attached on fuel lid that states: “UNLEADED FUEL ONLY”, “NUR UNVERBLEITES BENZIN”, “ENDAST BLYFRI BENSIN”, “SOLO GASOLINA SIN PLOMO” or “KHUSUS BENSIN TANPA TIMBAL”.

Gasoline/Ethanol blends
Blends of unleaded gasoline and ethanol (grain alcohol), also known as gasohol, are commercially available in certain areas. Blends of this type may be used in your vehicle if they are no more than 20% ethanol.
Make sure this gasoline-ethanol blend has octane ratings no lower than those recommended for the gasoline.

NOTE:
If you are not satisfied with the driveability or fuel economy of your vehicle when you use a gasoline/alcohol blend, you should switch back to unleaded gasoline containing no alcohol.

Gasoline containing MTBE
Unleaded gasoline containing MTBE (methyl tertiary butyl ether) may be used in your vehicle if the MTBE content is not greater than 15%. This oxygenated fuel does not contain alcohol.

NOTICE

The fuel tank has an air space to allow for fuel expansion in hot weather. If you continue to add fuel after the filler nozzle has automatically shut off or an initial blowback occurs, the air chamber will become full. Exposure to heat when fully fuelled in this manner will result in leakage due to fuel expansion. To prevent such fuel leakage, stop filling after the filler nozzle has automatically shut off, or when initial vent blowback occurs, if using an alternative non-automatic system.

NOTICE

Be careful not to spill fuel containing alcohol while refueling. If fuel is spilled on the vehicle body, wipe it up immediately. Fuels containing alcohol can cause paint damage, which is not covered under the New Vehicle Limited Warranty.

INDEX

Symbols

"ACC" Indicator Light 4-61
"ENG A-STOP OFF" Light 4-64
"ENG A-STOP" Indicator Light 4-63
"SET" Indicator Light 4-59

Numerics

360 View Camera 5-120
360 View Camera (Vehicle Without SUZUKI SAFETY SUPPORT) 5-148
4-speed Automatic Transmission 5-22
6-speed Automatic Transmission 5-25

A

ABS Warning Light 5-191
Accelerator and brake 4-21
Accelerator pedal 5-10
Accessory Socket 7-9
Adaptive cruise control 5-80
Adaptive cruise control system indicator light 4-67
Air Cleaner 9-14
Air Conditioner Filter Replacement 9-37
Air Conditioning System 9-37
Airbag Warning Light 4-55
Anti-lock Brake System (ABS) 5-189
Anti-lock Brake System (ABS) Warning Light 4-56
Assist Grips 7-13
Automatic Heating and Air Conditioning System (Climate Control) 7-25
Automatic Transmission (AT) Fluid 9-15
Average fuel consumption 4-7, 4-21
Average speed 4-21

B

Battery 5-3, 9-23, 12-4
Battery replacement 3-7, 3-14
Blind Spot Monitor (BSM) 5-92
Blind Spot Monitor (BSM) OFF indicator light 4-68
Brake Assist System 5-188
Brake Discs and Brake Drums 9-19
Brake Fluid 9-17
Brake Pedal 5-10, 9-18
Brake System Warning Light 4-54
Brakes 9-17
Braking 5-187
Brightness control 4-3, 4-18
Bulb Replacement 9-30

C

Catalytic Converter 6-13
Central Door Locking System 3-3
Certification Mark of Child Restraint System to Comply with UN R44 / R129 Standard 2-32
Changing Engine Oil 9-12
Changing Wheels 10-11
Charge Warning Light 4-59
Chassis Serial Number 12-1
Child Restraint Systems 2-30
Child Restraint Systems Installation Suitability for Each Seat Position 2-34
Child-Proof Locks (rear door) 3-4
Clock 4-5, 4-20
Clock and date 4-21
Coolant Level Check 9-13

Correct Sitting Posture 2-48
Corrosion Prevention 11-1
Cruise Control Indicator Light 4-59
D
Daily Inspection Checklist 5-1
Daytime Running Light (D.R.L.) 3-24, 9-32
Deceleration Energy Regenerating Indicator Light 4-64, 5-34
Door Locks 3-1
Door Pocket 7-13
Drink Holder 7-10
Drive Belt 9-3
Driving on Hills 6-7
Driving range 4-7, 4-21
Driving time 4-21
Dual Sensor Brake Support II (DSBS II) 5-58
Dual Sensor Brake Support II (DSBS II) OFF indicator light 4-65
Dual Sensor Brake Support II (DSBS II) OFF switch 5-65
E
Electric Power Steering Light 4-58
Electric Window Controls 3-18
Electronic Stability Program (ESP®) 5-183
Emergency locking retractor (ELR) 2-21
Energy flow 4-10, 4-27
ENG A-STOP Indicator Light 4-63
ENG A-STOP OFF Light 5-41
ENG A-STOP OFF Switch 5-41
ENG A-STOP System (Engine Auto Stop Start System) 5-34
Engine Coolant 9-13, 12-7
Engine Hood 7-4
Engine Oil 12-7
Engine Oil and Filter 9-11
Engine Oil Pressure Warning Light 4-58
Engine Serial Number 12-1
Engine Switch 5-6
Engine Switch Illumination 5-11
Engine Trouble: Does not Start 10-15
Engine Trouble: Overheating 10-15
Engine Trouble: Starter Does not Operate 10-15
ESP® Indicator Light 4-62, 5-184
ESP® OFF Indicator Light 4-62
ESP® OFF switch 5-185
F
Floor Mats 2-1
Folding Rear Seats 2-14
Footrest 7-13
For Thailand 13-1
Front Airbags 2-47
Front armrest with console box 7-12
Front Position Light 9-32
Front Seat Back Pocket 7-15
Front Seats 2-5
Front Turn Signal Light 9-32
Fuel 12-7, 13-1
Fuel consumption 4-7, 4-21
Fuel Filler Cap 7-1
Fuel Filler Door 7-1
Fuel gauge 4-2, 4-17
Fuel Recommendation 12-2
Function of Airbags 2-54

Fuses 9-26, 12-4
Fuses in Engine Compartment 9-26
Fuses Under Dashboard 9-28
G
Gasoline containing MTBE 12-2
Gasoline/Ethanol blends 12-2
Gear position 4-6
Gearshift Indicator 4-7, 4-29, 5-29
Glove Box 7-12
Glove Box Light 7-8, 9-34, 12-5
Guide me light 3-25
H
Handling for Airbags 2-52
Hazard Warning Switch 3-30
Head Restraints 2-7, 2-13
Headlight Aiming 9-29
Headlight Leveling Switch 3-20
Headlights 9-32
Head-up Display 5-110
Head-up Display (Vehicle Without SUZUKI SAFETY SUPPORT) 5-141
Heated Rear Window Switch 3-34
Heating and Air Conditioning System 7-16
High beam assist 5-78
High beam assist indicator light (green) 4-67
High beam assist warning light (yellow) 4-60
High Engine Coolant Temperature Warning Light (red color) 4-57
High Mount Stop Light 9-32
Highway Driving 6-6
Hill hold control system 5-186
Horn 3-33
I
If you cannot Shift Automatic Transmission Gearshift Lever out of “P” (PARK) 5-29
If You Get a Flat Tyre While Driving 10-14
Ignition “ON” Indicator Light 4-61
Ignition key reminder 5-9
Ignition switch 5-5
Illumination Indicator Light 4-62
Immobilizer / Keyless Push Start System Warning Light 4-60
Immobilizer System 5-8
Immobilizer/Keyless Push Start System Warning Light 5-8
Improving Fuel Economy 6-8
Information Display (Type A) 4-4
Information Display (Type B) 4-19
Inside Rearview Mirror 2-8
Installation of Child Restraint with Top Tether 2-44
Installation of radio frequency transmitters 7-32
Instantaneous fuel consumption 4-7, 4-21
Instrument Cluster (Type A) 4-1
Instrument Cluster (Type B) 4-15
Interior Light 7-7, 9-32, 12-5
Interior Workable Area 5-11
Intersection Guidance (When using Android Auto™ or Apple CarPlay on infotainment system) 4-28, 5-112, 5-143
J
Jacking Instructions 10-8
Jump-starting Instructions 10-13

K

Keyless Entry System Transmitter 3-6
Keyless Push Start System 5-10
Keyless Push Start System Remote Controller 3-9
Keyless push start system remote controller battery consumption warning light 3-14
Keys 3-1

L

Lane change signal 3-29
Lane departure prevention indicator light 4-66
Lane departure prevention OFF indicator light 4-66
Lane departure prevention system 5-66
Lane departure warning 5-66
Lane keep assist 5-73
Lane keep assist indicator light 4-66
Lap-shoulder Belt 2-21
License Plate Light 9-32
Light Reminder Buzzer 3-24
Lighting Control Lever 3-22
Lighting Operation 3-22
Lithium-ion battery 5-35
Lithium-ion battery indication 5-33
Low Engine Coolant Temperature Light (blue color) 4-63
Low Fuel Warning Light 4-56
Luggage Compartment Cover 7-16
Luggage Compartment Hook 7-15
Luggage Compartment Light 7-8, 12-5

M

Main Beam (High beam) Indicator Light 4-61
Maintenance Recommended Under Severe Driving Conditions 9-6
Maintenance Schedule 9-2
Malfunction Indicator Light 4-57
Manual air conditioning system (with digital control panel) 7-18
Manual mode 5-27
Manual mode indicator 4-7
Master Warning Indicator Light 4-64
Mirrors 2-8
Motion 4-21

O

Odometer 4-7, 4-29
Off-road Driving 6-8
Oil Filter Replacement 9-12
Oil Level Check 9-12
Open Door Warning Light 4-60
Outside Rearview Mirrors 2-9
Outside Rearview Mirrors Folding Switch 2-10
Overdrive off switch light 4-65

P

Parking Brake 9-19
Parking Brake Lever 5-18
Parking Brake Reminder Buzzer 5-19
Parking sensor indicator light 4-68
Parking sensors 5-105
Parking Sensors (Vehicle Without SUZUKI SAFETY SUPPORT) 5-174
Pedal 5-10
Periodic Maintenance Schedule 9-2
Petrol Engine 12-2
Pinching prevention function 3-19
Power-assisted Brakes 5-188

Preparation Before Winter Season 9-38
PUSH indicator light 4-61
R
Radio Antenna 7-32
Raising Vehicle with Garage Jack 10-9
Rear Combination Light 9-32
Rear Cross Traffic Alert (RCTA) OFF indicator light 4-68
Rear CrossTtraffic Alert (RCTA) 5-98
Rear Passenger's Seat Belt Reminder Light 4-55
Rear Seats 2-13
Rear Window Washer 3-33
Rear Window Wiper 3-32, 9-36
Rearview Camera 5-180
Refill with Oil and Oil Leakage Check 9-12
Remote Audio Controls 7-33
Remote Controller Outside Warning 5-13
Remote Folding Mirrors 2-11
Replacement of the Battery 9-24
Roof Rails 7-34
Running-in 6-13
S
Safety for Child 2-16
Seat Adjustment 2-5
Seat Belt 2-20
Seat Belt Care 2-27
Seat Belt Force Limiter System 2-29
Seat Belt Handling 2-26
Seat Belt Pretensioner System 2-27
Seat Belt Reminder 2-23
Seat Belts and Child Restraint Systems 2-2
Seat height adjustment lever 2-6
Seat position adjustment lever 2-6
Seat Utility 2-14
Seatback angle adjustment lever 2-6
Securing Child Restraint System by ISOFIX 2-41
Securing Child Restraint System by Seat Belt 2-40
Security System 3-16
Selecting an Appropriate Child Restraint System 2-32
Selection of coolant 9-13
Selection of Ignition Modes 5-11
Selector position 4-6
Setting Mode 4-11, 4-29
SHVS (Smart Hybrid Vehicle by Suzuki) 5-32
Side airbags and side curtain airbags 2-48
Side Door Locks 3-2
Side Turn Signal Light 9-32
Spark Plug 9-15, 12-4
Specified Fluid 9-15
Specified Oil 9-11
Speedometer 4-2, 4-17
Stability Control System 5-183
Starting / stopping engine (vehicle with keyless push start system) 5-16

Starting / stopping engine (vehicle without keyless push start system) 5-15
Steering assist indicator light 4-67
Steering lock warning light 4-58
Steering Wheel 9-20
Stopping Engine 5-15, 5-17
Storage Area 7-11
Stuck Vehicle 6-9
Sun Visor 7-6
Supplemental Restraint System (Airbags) 2-46
SUZUKI SAFETY SUPPORT 5-46
T
Tachometer 4-2, 4-17
Tailgate 3-4
Temperature Gauge 4-18
Theft deterrent light 4-62
Thermometer 4-6, 4-21
Tilt / Telescoping Steering Lock Lever 2-8
Torque and power 4-21
Total idling stop time and total idling fuel saved 4-21, 4-25
Towing by Tow Truck 10-1
Towing by Using Towing Eye 10-2
Traction Control System 5-183
Transmission Warning Light 4-59
Trip meter 4-7
Turn Signal Control Lever 3-29
Turn Signal Indicators 4-61
Turn Signal Operation 3-29
Tyre 9-20, 12-6
Tyre Changing Tool 10-6
Tyre Inspection 9-21
Tyre Pressure 5-2
Tyre Rotation 9-22
U
Ultrasonic sensors 5-101
USB Charging Socket 7-14
USB Socket 7-14
Using transmission 5-22
V
Vanity Mirror 7-6
Vehicle Identification 12-1
Vehicle Loading 8-1
Vehicle speed 4-27
Vehicle swaying warning 5-67
W
Warning and Indicator Lights 4-54
Warning and indicator messages 4-33, 5-90, 5-97, 5-100, 5-109, 5-179
Warning Label of SRS Airbag for Front Passenger's Seat 2-50
Warning Triangle 10-16
Washing 11-3
Waxing 11-6
When Starting the Engine 2-61
Windows 3-18
Windshield Washer 3-32
Windshield Washer Fluid 9-36
Windshield Wiper and Washer Lever 3-30
Windshield Wipers 3-31, 9-34
Wiper Blades 9-34
Wireless Charger 7-34

For countries, in which the revised edition is applicable after the third edition of UN Regulation No.10 has been enacted.

Installation of Radio Frequency (RF) Transmitting Equipment

Your vehicle is conformed to the revised edition since the third edition of UN Regulation No.10.

When you intend to use RF transmitting equipment in your vehicle, we strongly recommend that you select the equipment which conforms to applicable rules or regulations in your country, and consult an authorized SUZUKI dealer or qualified service technician for advice.

Table : Installing and the use of the on-board RF transmitter equipment

Frequency bands (MHz)		Antenna position at vehicle*	Maximum output power (W)
144-146	Amateur band	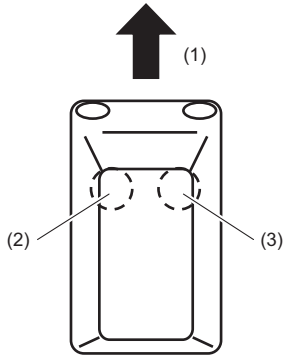	50
430-440	Amateur band		50
1200-1300	Amateur band		10

(1) Front
(2) Antenna installation position: Front left of roof
(3) Antenna installation position: Front right of roof

*The illustration is example of hatchback vehicle.

Specific conditions for installation

NOTE:
1) Antenna cable shall be routed as far as possible from the vehicle electrical and electronic systems and wiring harness in the vehicle.
2) Power cable of transmitter shall be properly connected to lead-acid battery on the vehicle.

NOTICE
Before using your vehicle, check if there is no interference to all electrical devices on your vehicle for both Standby mode and Transmitting mode of the RF transmitting equipment.



CLASS A

NBTC ID. A57004-17-2815



CLASS A

NBTC ID. A57007-20-2815

This telecommunications equipment and device comply with the standards or technical specifications of the NBTC. This radio communication equipment emits electromagnetic waves that comply with the standards for human health safety from the use of radio communication equipment announced by the National Broadcasting and Telecommunication Commission (NBTC). To avoid potential dangers from electromagnetic waves, please maintain a distance of more than 20 cm from the radar sensor while it is operating. This radio communication equipment emits electromagnetic waves that comply with the standards for human health safety from the use of radio communication equipment announced by the National Broadcasting and Telecommunications Commission (if equipped).



K56RA, I55R0, K56R0, K56RQ, K73R0
P55R0, R55R2, R55R3, T55R1, K72R0
K84S0, K74UA, T85UE

MEMO

MEMO

MEMO

MEMO

BATTERY LABEL SYMBOL MEANINGS

	No smoking, no naked flames, no sparks			Battery acid
	Shield eyes			Note operating instructions
	Keep away from children			Explosive gas

Prepared by

Suzuki Motor Corporation

July, 2025

Part No. 99011-74US0-01E
Printed in Indonesia

TP584

SERVICE STATION INFORMATION

Fuel recommendation:
See page 12-2

Engine oil:

K15B Engine
Classification: API SJ, SL, SM, SN or SP
ILSAC GF-6
Viscosity: SAE **0W-20**, 5W-30, 10W-30, 10W-40, 15W-40, 20W-40

K15C Engine
Classification: API SL, SM, SN or SP
ILSAC GF-6
Viscosity: SAE **0W-16**, 0W-20, 5W-30

For further details, see “Engine Oil and Filter” in the “INSPECTION AND MAINTENANCE” section.

Brake fluid:
DOT3 or SAE J1703

Tyre cold pressure:
See the “Tyre Information Label” located on the driver’s door lock pillar.

英

SUZUKI

99011-74US0-01E

Suzuki Motor Corporation Part No. 99011-74US0-01E July, 2025 C 英

Printed in Indonesia