FOREWORD

This manual should be considered as a permanent part of the vehicle and should remain with the vehicle when resold or otherwise transferred to a new owner or operator. Please read this manual carefully before operating your new SUZUKI vehicle and review the manual from time to time. It contains important information on safety, operation and maintenance.

SUZUKI MOTOR CORPORATION

All information in this manual is based on the latest product information available at the time of publication. Due to improvements or other changes, there may be discrepancies between information in this manual and your vehicle. SUZUKI MOTOR CORPORATION reserves the right to make production changes at any time, without notice and without incurring any obligation to make the same or similar changes to vehicles previously built or sold.

This vehicle may not comply with standards or regulations of other countries. Before attempting to register this vehicle in any other country, check all applicable regulations and make any necessary modifications.

IMPORTANT

⚠WARNING/⚠CAUTION/*NOTICE*/*NOTE*

Please read this manual and follow its instructions carefully. To emphasize special information, the symbol ⚠ and the words **WARNING**, **CAUTION**, ***NOTICE*** and *NOTE* have special meanings. Pay particular attention to messages highlighted by these signal words:

⚠ WARNING
Indicates a potential hazard that could result in death or serious injury.

⚠ CAUTION
Indicates a potential hazard that could result in minor or moderate injury.

NOTICE
Indicates a potential hazard that could result in vehicle damage.

NOTE:
Indicates special information to make maintenance easier or instructions clearer.

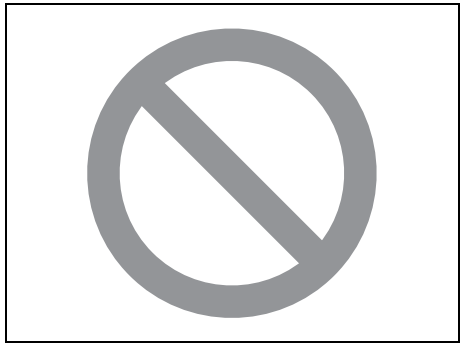

75F135

The circle with a slash in this manual means “Do not do this” or “Do not let this happen”.

MODIFICATION WARNING

⚠ WARNING

Do not modify this vehicle. Modification could adversely affect safety, handling, performance, or durability and may violate governmental regulations. In addition, damage or performance problems resulting from modification may not be covered under warranty.

⚠ WARNING

Improper installation of mobile communication equipment such as cellular telephones, CB (Citizen’s Band) radios or any other wireless transmitters may cause electronic interference with your vehicle’s ignition system or any other electrical systems, resulting in vehicle performance problems. Consult a SUZUKI dealer or a qualified workshop for advice.

NOTICE

The diagnostic connector of your vehicle is prepared only for the specific diagnostic tool for inspection and service purpose. Connecting any other tool or device may interfere with electronic parts operations and cause running out of batteries.

INTRODUCTION

Thank you for choosing SUZUKI product and welcome to our growing family. Your choice was a wise one; SUZUKI products have great value that will give you driving pleasure for years.

This owner's manual was prepared to give you a safe, enjoyable, and trouble-free experience with your SUZUKI vehicle. In this manual, you will learn about the vehicle's operation, its safety features and maintenance requirements. Please read the manual carefully before operating your vehicle. Afterwards, keep this manual in the glove box for further reference.

Should you resell the vehicle, please leave this manual with it for the next owner.

In addition to the owner's manual, the other booklets provided with your SUZUKI vehicle explain the vehicle's warranties. We recommend you read them as well to familiarize yourself with this important information.

When planning the regular scheduled maintenance of your SUZUKI, we recommend you visit your local SUZUKI dealership. Their factory-trained technicians will provide the best possible service and use only genuine SUZUKI parts and accessories.

NOTE:
The illustrations in this manual represent a typical variation, which may differ from your vehicle.

"SUZUKI dealer" means an Authorized SUZUKI Dealer and an Authorized SUZUKI Service Workshop.

SUZUKI MOTOR CORPORATION

86TS0-01E

VEHICLE DATA RECORDINGS

There are certain components of your vehicle incorporating data storage modules or memories, which temporarily or permanently store the technical data below listed. These data are exclusively technical and serve for (i) identifying and correcting faults occurred in the Vehicle and/or (ii) optimizing functions of the Vehicle.

Recorded data

- Malfunctions, faults, and errors in important system components. (e.g. lights, brakes)
- Reactions of the Vehicle in certain situations (e.g. inflation of SRS airbags, activation of stability control system).
- Operating conditions of system components (e.g. filling levels).
- Status messages of the Vehicle and its individual components (e.g. vehicle speed, acceleration, deceleration, lateral acceleration).
- Ambient conditions (e.g. outside temperature).

Recorded data vary depending on vehicle model or grade.

RECOMMENDATION OF GENUINE SUZUKI PARTS AND ACCESSORIES USE

SUZUKI strongly recommends the use of genuine SUZUKI parts and accessories. Genuine SUZUKI parts and accessories are built to the highest standards of quality and performance, and are designed to fit your vehicle's exact specifications.

A wide variety of non-genuine replacement parts and accessories for SUZUKI vehicles are currently available in the market. Using these parts and accessories can affect the vehicle performance and shorten its useful life. Therefore, installation of non-genuine SUZUKI parts and accessories is not covered under warranty.

Non-genuine SUZUKI parts and accessories

Some parts and accessories may be approved by certain authorities in your country.
Some parts and accessories are sold as SUZUKI-authorized replacement parts and accessories. Some genuine SUZUKI parts and accessories are sold as re-use parts and accessories. These parts and accessories are non-genuine SUZUKI parts and accessories and use of these parts is not covered under warranty.

Re-use of genuine SUZUKI parts and accessories

The resale or re-use of the following items which could cause hazards for users is expressly forbidden:

- Airbag components and all other pyrotechnic items, including their components (e.g. cushion, control devices and sensors)
- Seat belt system, including their components (e.g. webbing, buckles and retractors)

The airbag and seat belt pretensioner components contain explosive chemicals. These components should be removed and disposed of properly by SUZUKI-authorized service shop or scrap yard to avoid unintended explosion before scrapping.

SERVICE STATION GUIDE

1. Fuel (see section 9)
2. Engine hood (see section 5)
3. Tyre changing tools (see section 7)
4. Engine oil dipstick (see section 6)
5. Automatic transmission fluid dipstick <Red> (see section 6)
6. Engine coolant (see section 6)
7. Windshield washer fluid (see section 6)
8. Battery (see section 6)
9. Tyre pressure (see Tyre information label on driver's door lock pillar)
10. Spare tyre (see section 7)

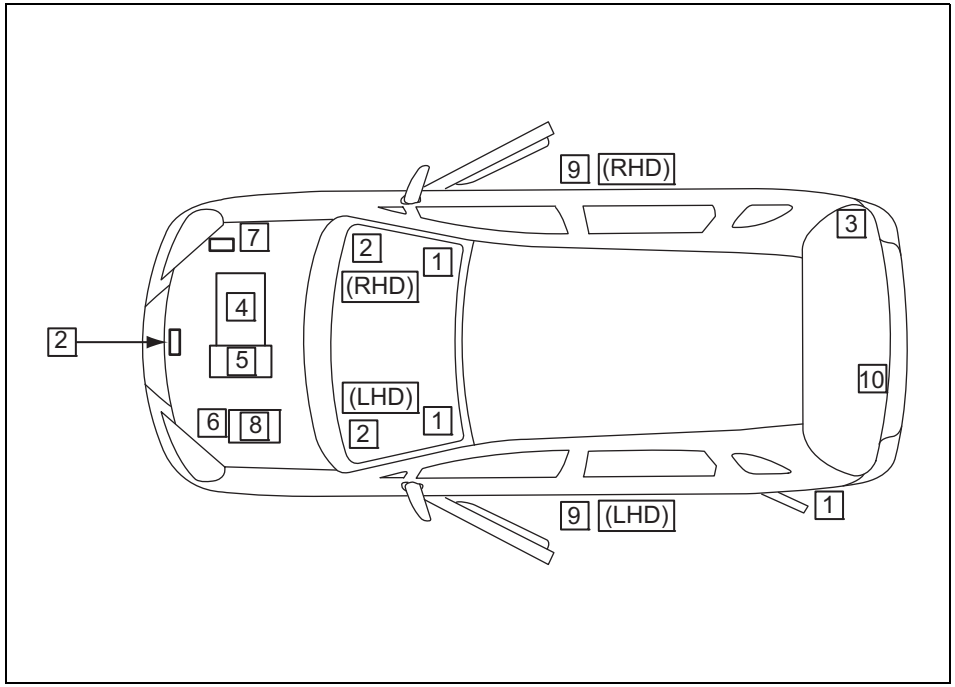

73RS007

LHD: Left Hand Drive
RHD: Right Hand Drive

TABLE OF CONTENTS

FOR SAFE DRIVING	1
BEFORE DRIVING	2
OPERATING YOUR VEHICLE	3
DRIVING TIPS	4
OTHER CONTROLS AND EQUIPMENT	5
INSPECTION AND MAINTENANCE	6
EMERGENCY SERVICE	7
APPEARANCE CARE	8
Specifications	9
SUPPLEMENT	10
INDEX	11

EXTERIOR

1. Rear Window Wiper (P.2-70)
2. High-mount Stop Light (P.6-42)
3. Radio Antenna (P.5-24)
4. Engine Hood (P.5-58)
5. Headlight (P.2-62, 6-38)
6. Windshield Wipers (P.2-69)
7. Fuel Filler Cap (P.5-57)
8. License Plate Light (P.6-41)
9. Tailgate (P.2-4)
10. Rear Combination Light (P.6-40)
11. Front Fog Light (if equipped) (P.2-60, 6-39)
12. Outside Rearview Mirrors (P.2-21)
13. Door Locks (P.2-2)
14. Parking Sensors (if equipped) (P.3-36)
15. Rearview Camera (if equipped) (P.3-43)

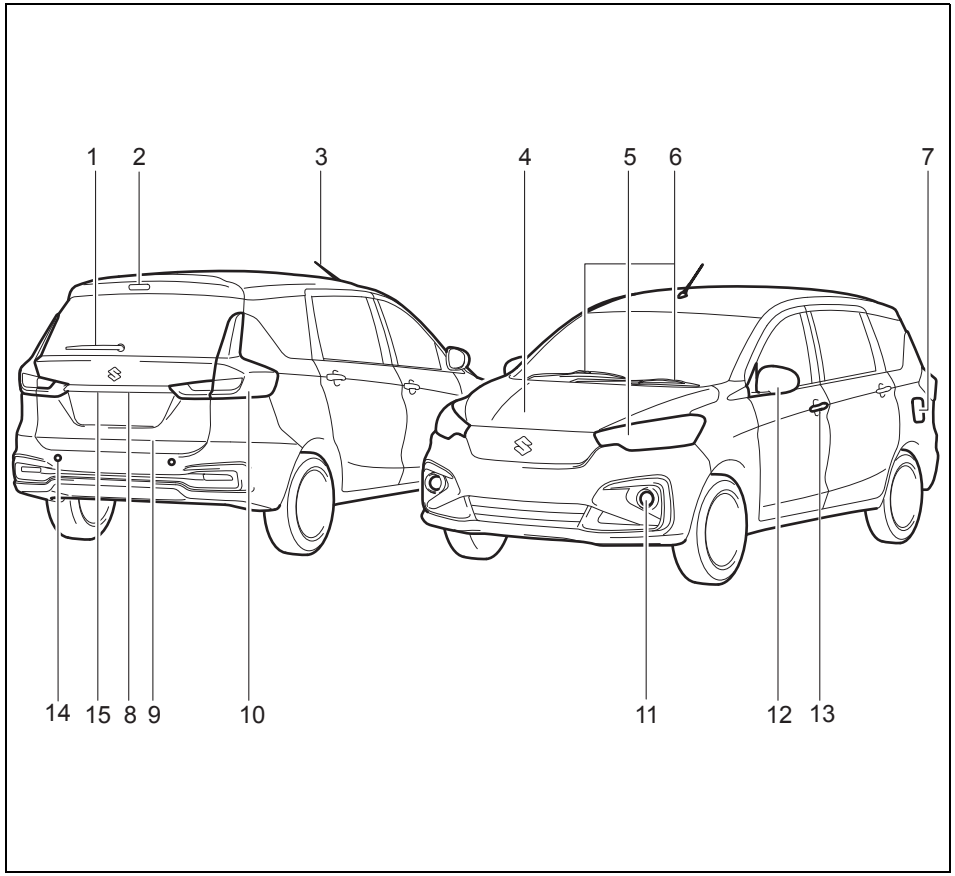

86T0002

INTERIOR

1. Inside Rearview Mirror (P.2-21)
2. Interior Light (P.5-61, 6-42)
3. Sun Visor (P.5-60)
4. Electric Mirrors Control Switch (if equipped) (P.2-21)/Power Window Controls (P.2-18)
5. Assist Grips (P.5-63)
6. Seat Belts (P.1-9)
7. Gearshift Lever (P.3-18)
8. Accessory Socket (if equipped) (P.5-62)

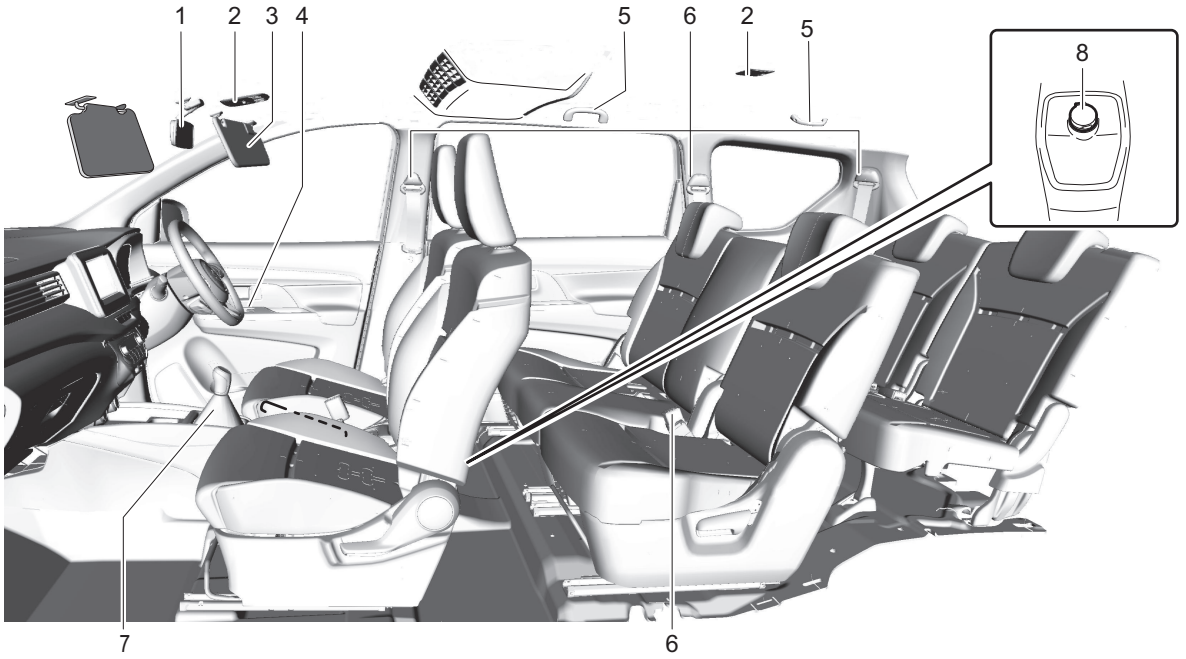

86T0007

ILLUSTRATED TABLE OF CONTENTS

1. Front Seats (P.1-1)
2. Parking Brake Lever (P.3-11)
3. Rear Seats (P.1-4)
4. Overhead Rear Air Conditioning System (if equipped) (P.5-3)
5. Hands-free Microphone (if equipped) (P.5-43)
6. Warning Label of SRS Airbag for Front Passenger's Seat (P.1-36) *1, *2

*1 Be sure to read the detailed information in the target page before using a child restraint system.

*2 NEVER use a rearward facing child restraint on a seat protected by an ACTIVE AIRBAG in front of it, DEATH or SERIOUS INJURY to the CHILD can occur.

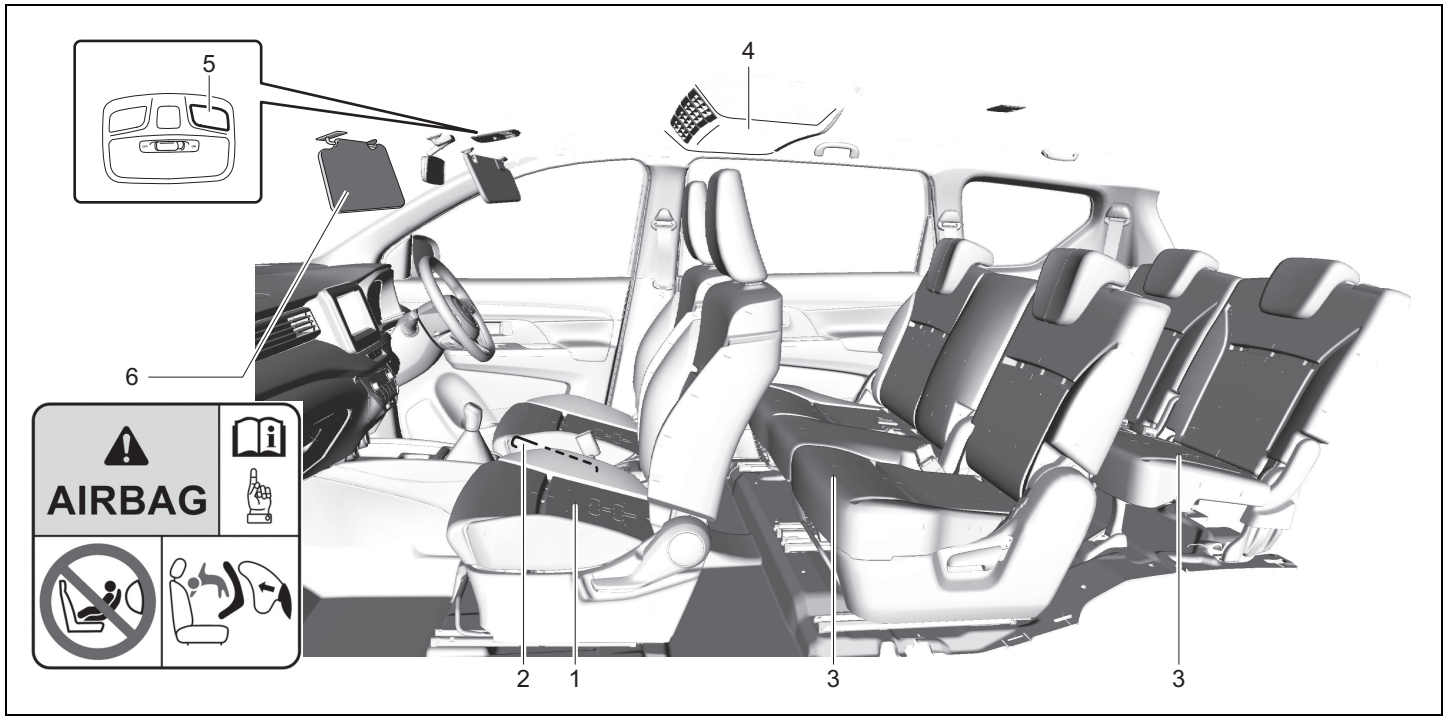

86T0024

INSTRUMENT PANEL

1. Front Airbags (P.1-32)
2. Audio System (if equipped) (P.5-25)
3. Hazard Warning Switch (P.2-68)
4. Windshield Wiper and Washer Lever (P.2-68)/Rear Window Wiper and Washer Switch (P.2-70)
5. Instrument Cluster (P.2-25)/ Information Display (P.2-28)
6. Lighting Control Lever (P.2-62)/ Front Fog Light Switch (if equipped) (P.2-67)
7. Glove Box (P.5-64)
8. Heating and Air Conditioning System (P.5-1)
9. Accessory Socket (P.5-62)
10. USB Socket (if equipped) (P.5-64)
11. Tilt Steering Lock Lever (P.2-71)
12. Ignition Switch (Vehicle without Keyless Push Start System) (if equipped) (P.3-3)
13. Engine Hood Release Handle (P.5-58)
14. Fuse Box (P.6-35)
15. Turn Signal Control Lever (P.2-67)
16. Engine Switch (Vehicle with Keyless Push Start System) (if equipped) (P.3-5)
17. Steering Switch (if equipped) (P.5-43)
18. Hands-free Switches (if equipped) (P.5-42)
19. Cruise control switches (if equipped) (P.3-34)
20. ENG A-STOP OFF switch (P.3-33)
21. Parking Sensor Switch (if equipped) (P.3-42)
22. ESP® OFF Switch (if equipped) (P.3-52)

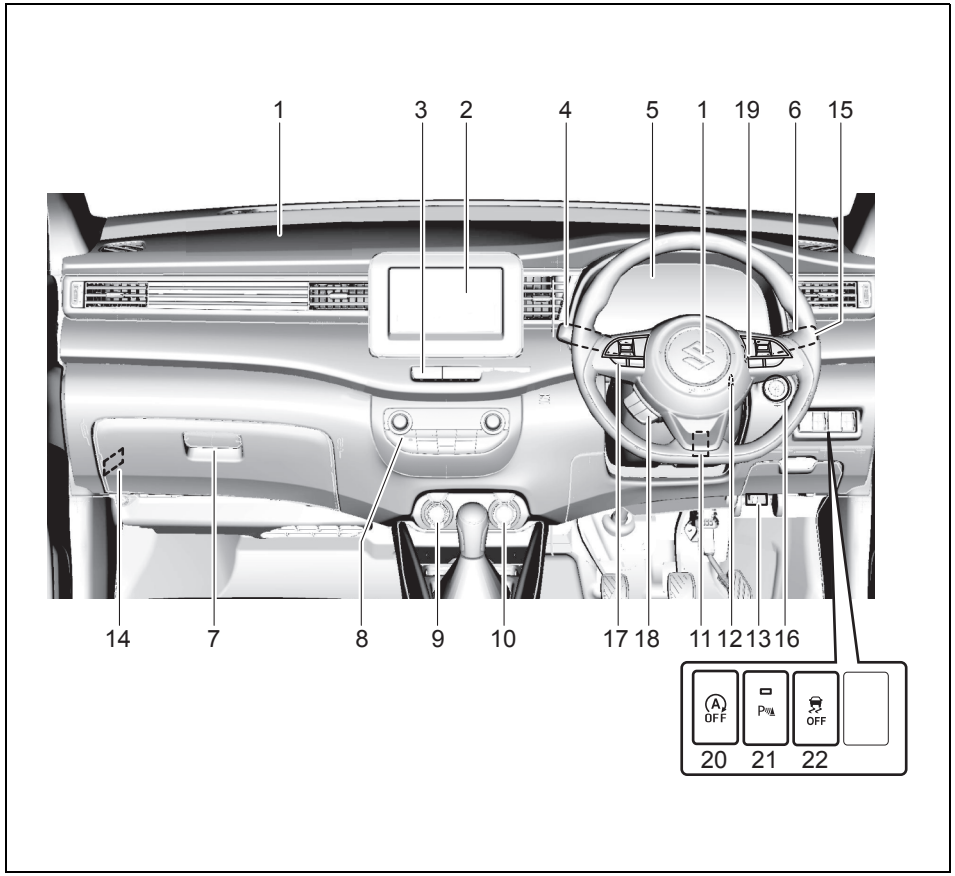

86T0003

MEMO

FOR SAFE DRIVING

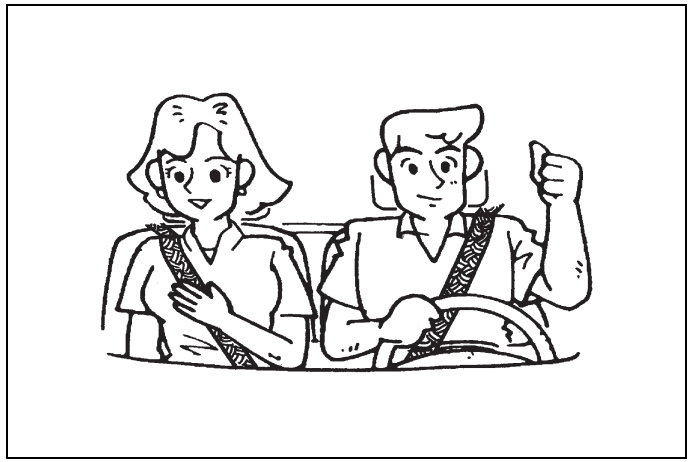

65D231S

Floor Mats 1-1
Front Seats 1-1
Rear Seats 1-4
Seat Belts and Child Restraint Systems 1-9
Child Restraint System for Countries Applied for
UN Regulation No.16 1-20
Supplemental Restraint System (Airbags) 1-31
Exhaust Gas Warning 1-40

Floor Mats

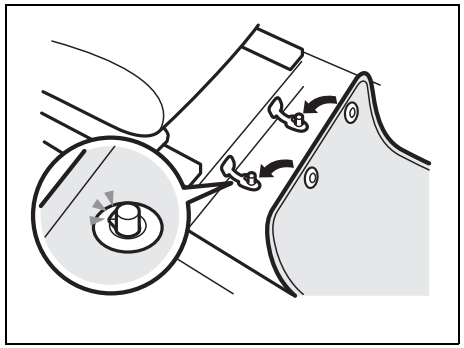

60MK020

To prevent the driver's side floor mat from sliding forward and possibly interfering with the operation of the pedals, genuine SUZUKI floor mats are recommended.
Whenever you put the driver's side floor mat back in the vehicle after it has been removed, be sure to hook the floor mat grommets to the fasteners and position the floor mat properly in the footwell.

When you replace the floor mats in your vehicle with a different type such as all-weather floor mats, we highly recommend using genuine SUZUKI floor mats for proper fitting.

⚠ WARNING

Failure to take the following precautions may result in the driver's side floor mat interfering with the pedals and causing a loss of vehicle control or an accident.
- **Make sure that the floor mat grommets are hooked to the fasteners.**
- **Never stack floor mats.**
- **Never use a floor mat which does not fit the floor contours.**

Front Seats

Seat Adjustment

⚠ WARNING

Never attempt to adjust the driver's seat or seatback while driving. The seat or seatback could move unexpectedly, causing loss of control. Make sure that the driver's seat and seatback are properly adjusted before you start driving.

⚠ WARNING

To avoid excessive seat belt slack, which reduces the effectiveness of the seat belts as a safety device, make sure that the seats are adjusted before the seat belts are fastened.

⚠ WARNING

Do not place any object under the front seat. If an object becomes caught under the front seat, the following may occur.
- **The seat will not be latched.**

⚠ WARNING

Do not leave cigarette lighters or spray cans on the floor. If a cigarette lighter or spray can is on the floor, it may light accidentally when luggage is loaded or the seat is adjusted, causing a fire.

Adjusting Seat Position



73R0032

The adjustment lever for each front seat is located under the front of the seat. To adjust the seat position, pull up on the adjustment lever and slide the seat forward or rearward.
After adjustment, try to move the seat forward and rearward to ensure that it is securely latched.

Adjusting Seat Height (if equipped)



72R0132

If the driver's seat is equipped with a seat height adjuster lever on the outboard side of the seat, raise or lower the seat by pulling up or down the adjuster lever.

Adjusting Seatbacks

⚠ WARNING

All seatbacks should always be in an upright position when driving, or seat belt effectiveness may be reduced. Seat belts are designed to offer maximum protection when seatbacks are in the upright position.

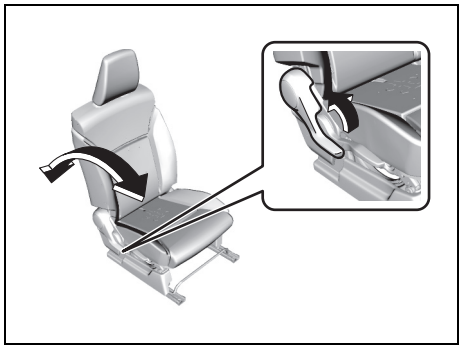

72R0133

To adjust the seatback angle of front seats, pull up the lever on the outboard side of the seat, move the seatback to the desired position, and release the lever to lock the seatback in place.

Head Restraints

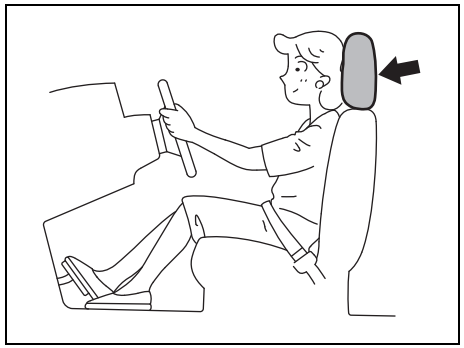

63J246

Head restraints are designed to help reduce the risk of neck injuries in the case of an accident. Adjust the head restraint to the position which places the center of the head restraint closest to the top of your ears. If this is not possible for very tall passengers, adjust the head restraint as high as possible.

⚠ WARNING

- **Never drive the vehicle with the head restraints removed.**
- **Do not attempt to adjust the head restraint while driving.**

NOTE:
It may be necessary to recline the seatback to provide enough overhead clearance to remove the head restraint.

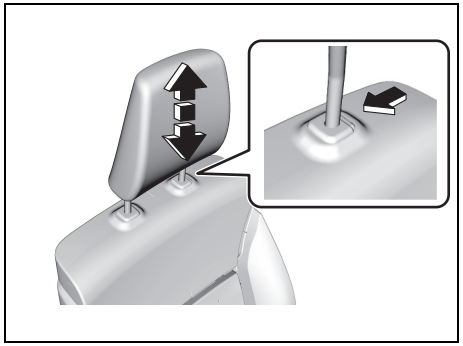

73R0035

To raise the front head restraint, pull upward the head restraint until it clicks. To lower the head restraint, push down on the head restraint while holding in the lock lever. If a head restraint must be removed (for cleaning, replacement, etc.), push in the lock lever and pull the head restraint all the way out.

Rear Seats

Seat Adjustment

⚠ WARNING

To avoid excessive seat belt slack, which reduces the effectiveness of the seat belts as a safety device, make sure that the seats are adjusted before the seat belts are fastened.

Adjusting Seat Position (for 2nd Row Seats)

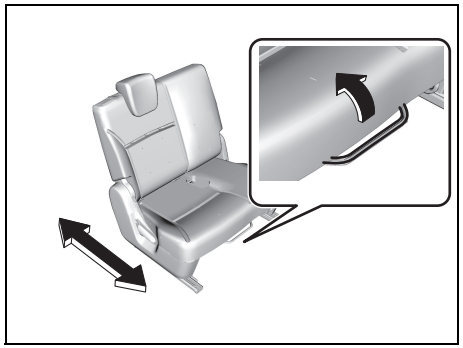

73R0036

The adjustment levers for 2nd row seats are located under the front of the seats. To adjust the seat position, pull up on the adjustment lever and slide the seat forward or rearward.
After adjustment, try to move the seat forward and rearward to ensure that it is securely latched.

NOTICE

When the 3rd row seat is folded forward, adjust the 2nd row seat not to reach the 3rd row seat.

Adjusting Seatbacks

⚠ WARNING

All seatbacks should always be in an upright position when driving, or seat belt effectiveness may be reduced. Seat belts are designed to offer maximum protection when seatbacks are in the upright position.

For 2nd row seats

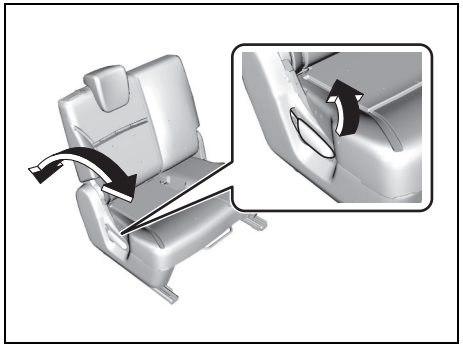

73R0037

To adjust the seatback angle of 2nd row seats, pull up the lever on the outboard side of the seat, move the seatback to the desired position, and release the lever to lock the seatback in place.

For 3rd row seats

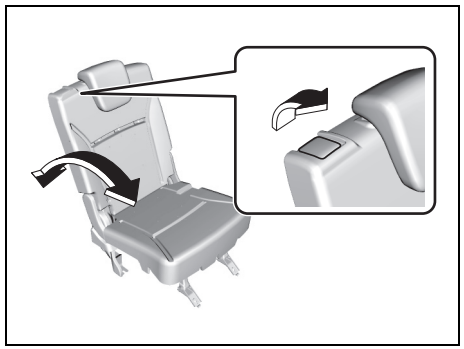

73RS017

To adjust the seatback angle of 3rd row seats, lift up the release lever, move the seatback to the desired position, and return the lever to lock the seatback in place.

Walk-in Type Seats (for 2nd Row Seats)

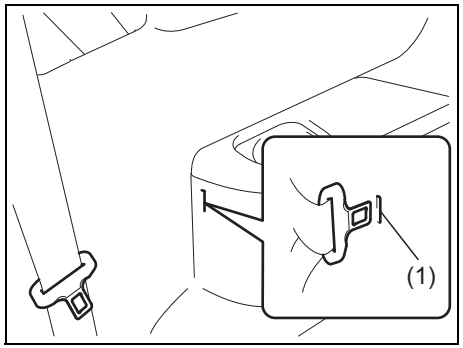

73R0038

NOTE:
To enter to or exit from the 3rd row seat, insert the tongue plate of the buckle into the part (1) before moving the 2nd row seat.

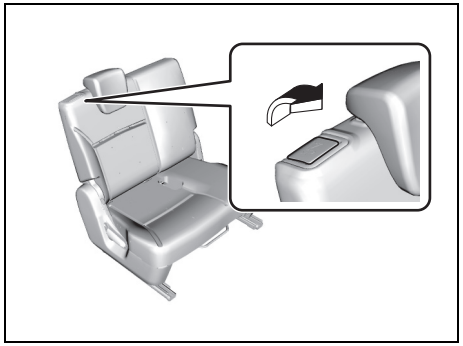

73R0039

The walk-in type seat can be moved to provide easy entry to and exit from the 3rd row seats. You can move a walk-in seat by lifting up the release lever and pushing the seatback forward.

⚠ WARNING

- **After using the walk-in function, be sure to return the folded seat back to an upright position.**
- **Before returning a walk-in seat to its normal seating position, make sure that the feet of the passenger in the 3rd row seat are out of the way.**
- **After returning the seat to its normal seating position, make sure it is securely latched.**

Head Restraints

Head restraints are designed to help reduce the risk of neck injuries in the case of an accident.

⚠ WARNING

- **Never drive the vehicle with the head restraints removed.**
- **Do not attempt to adjust the head restraint while driving.**

NOTE:
It may be necessary to fold forward the seatback to provide enough overhead clearance to remove the head restraint.

Adjust the head restraint to the position which places the center of the head restraint closest to the top of your ears. If this is not possible for very tall passengers, adjust the head restraint as high as possible.

2nd row side seats

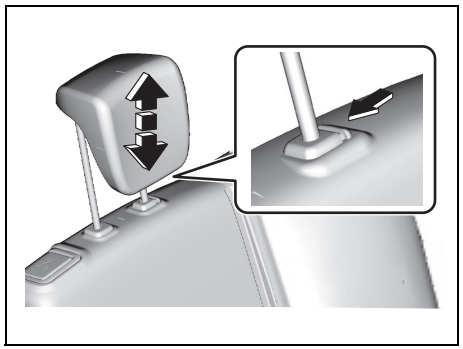

73RS010

2nd row center seat (if equipped)

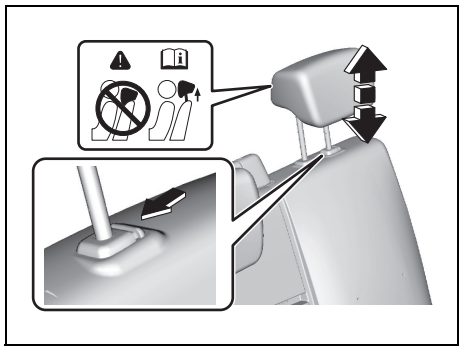

73R0325

To raise the 2nd head restraint, pull upward the head restraint until it clicks. To lower the head restraint, push down the head restraint while holding in the lock lever. If a head restraint must be removed (for cleaning, replacement, etc.), push in the lock lever and pull the head restraint all the way out.

When using the center head restraint, pull it up and lock it securely before driving.

⚠ WARNING

Do not allow anyone to sit in the 2nd row center seat with the center head restraint removed or in stowed position.

3rd row seats

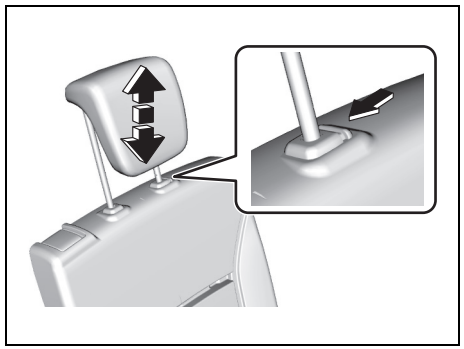

73R0040

To raise the 3rd head restraint, pull upward the head restraint until it clicks. To lower the head restraint, push down the head restraint while holding in the lock lever. If a head restraint must be removed (for cleaning, replacement, etc.), push in the lock lever and pull the head restraint all the way out.

When installing a child restraint system, raise the head restraint to the most upper position.

Folding Rear Seats

The rear seat of your vehicle can be folded forward to provide additional cargo space.

2nd row seats

To fold the 2nd row seat forward:

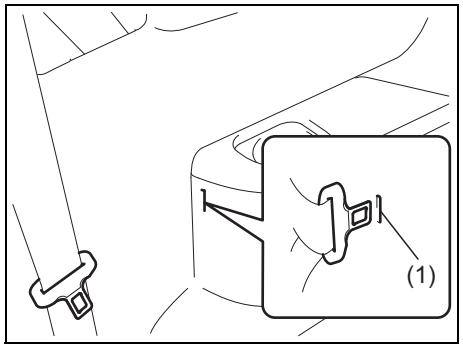

73R0038

1) Insert the tongue plate of the buckle into the part (1).

NOTICE

- **When you move a seatback, make sure the tongue plate of the buckle is inserted in the seat belt catch hole so the seat belts are not caught by the seatback, seat hinge, or seat latch. This helps prevent damage to the belt system.**
- **Make sure the belt webbing is not twisted.**

2) Lower the head restraint fully.
3) Store the seat belt buckles in the seat cushion slit.

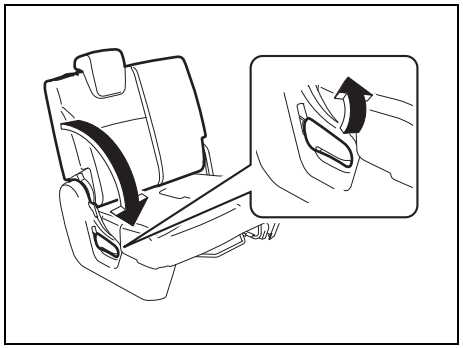

73R0041

4) Pull up the lever on the outboard side of the seat, and fold the seatback forward.

NOTICE

When the 2nd row seat head restraint reaches the front seatback, slide the front seat forward.

⚠ WARNING

If you need to carry cargo in the passenger compartment with the 2nd row seatback folded forward, be sure to secure the cargo or it may be thrown about, causing injury. Never pile cargo higher than the seatback.

To return the seat to the normal position, follow the procedure below.

NOTICE

When you move a seatback, make sure the tongue plate of the buckle is inserted in the seat belt catch hole so the seat belts are not caught by the seatback, seat hinge, or seat latch. This helps prevent damage to the belt system.

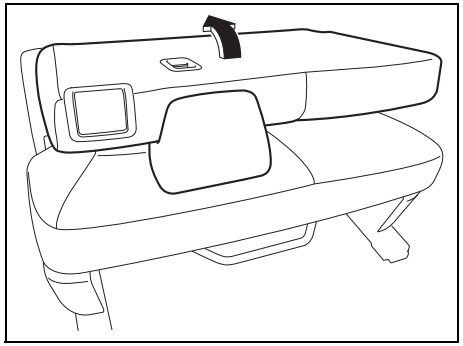

73R0006

Raise the seatback until it locks into place.

NOTE:
When the seatback is locked in the folded position, pull up the lever on the outboard side of the seat to unlatch the seatback.

After returning the seat, try moving the seatback to make sure they are securely latched.

3rd row seats

To fold the 3rd row seat forward:

1) Lower the head restraint fully.

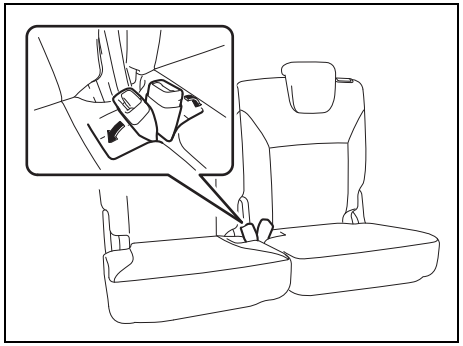

73R0207

2) Stow the seat belt buckles of the right and left seating position into the pocket of the seat cushion as shown in the illustration.

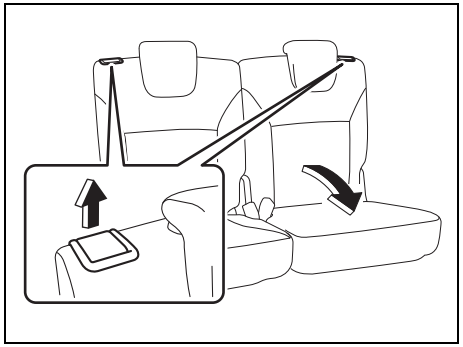

73R0007

3) Lift up the release lever on the top of seat, and fold the seatback forward.

NOTICE

When the 3rd row seat head restraint reaches the 2nd row seatback, slide the 2nd row seat forward.

NOTICE

When you are not using a seat belt, stow the seat belt buckles of the right and left seating position into the pocket first. This helps prevent being caught by the seat and being damaged.

⚠ WARNING

If you need to carry cargo in the passenger compartment with the 3rd row seatback folded forward, be sure to secure the cargo or it may be thrown about, causing injury. Never pile cargo higher than the seatback.

To return the seat to the normal position, follow the procedure below.

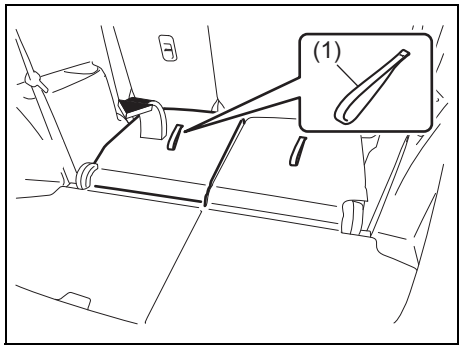

73R0008

Raise the seatback until it locks into place.

When you raise the seat from back of it, pull the strap (1).

NOTICE

Do not allow items in the luggage box to extend above the top of the luggage box. Otherwise, the luggage box or cover may be damaged.

After returning the seat, try moving the seatback to make sure they are securely latched.

Seat Belts and Child Restraint Systems

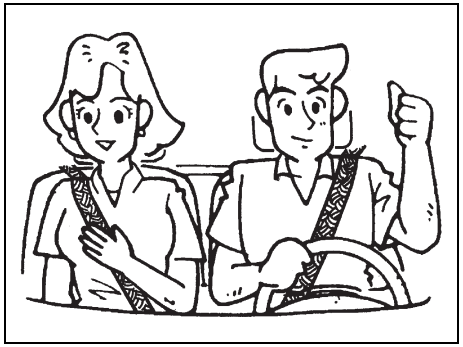

65D231S

⚠ WARNING

Wear your seat belt at all times.

⚠ WARNING

An airbag supplements, or adds to, the frontal collision protection offered by seat belts. The driver and all passengers must be properly restrained by wearing seat belts at all times, whether or not an airbag is mounted at their seating position, to minimize the risk of severe injury or death in the event of a collision.

⚠ WARNING

Do not modify, remove, disassemble seat belts. Doing so may prevent them from functioning properly and cause the risk of severe injury or death in the event of a collision.

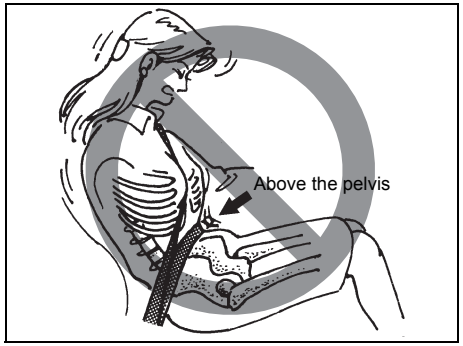

65D606

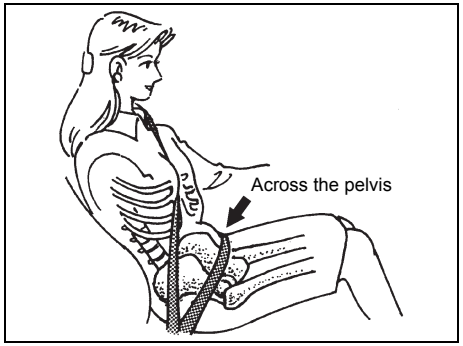

65D201

⚠ WARNING

- **Never allow persons to ride in the cargo area of a vehicle. In the event of an accident, there is a much greater risk of injury for persons who are not riding in a seat with their seat belt securely fastened.**
- **Seat belts should always be adjusted as follows:**
  - **– the lap portion of the belt should be worn low across the pelvis, not across the waist.**
  - **– the shoulder straps should be worn on the outside shoulder only, and never under the arm.**
  - **– the shoulder straps should be away from your face and neck, but not falling off your shoulder.**

(Continued)

⚠ WARNING

(Continued)

- **Seat belts should never be worn with the straps twisted and should be adjusted as tightly as is comfortable to provide the protection for which they have been designed. A slack belt will provide less protection than a snug belt.**
- **Check that seat belt latch plate (tongue) is inserted into the proper buckle especially in the rear seats. It is not possible to insert into the wrong buckles in the rear seats.**

(Continued)

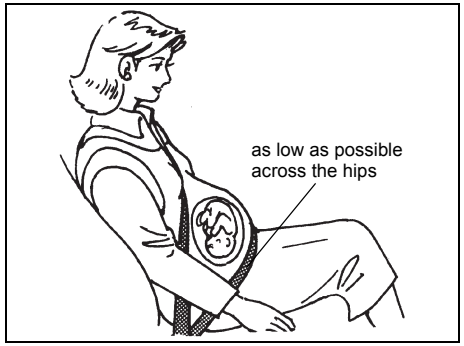

65D199

⚠ WARNING

(Continued)
- **Pregnant women should use seat belts, although specific recommendations about driving should be made by the woman's medical advisor. Remember that the lap portion of the belt should be worn as low as possible across the hips, as shown in the illustration.**
- **Do not fasten your seat belt over hard or breakable objects in your pockets or on your clothing. If an accident occurs, objects such as glasses, pens, etc. under the seat belt can cause injury.**

(Continued)



65D609

⚠ WARNING

(Continued)
- **Do not hold a child on a passenger's lap. Even if the passenger holds the child tightly, he/she would not be supported enough in the event of an accident and it could result in a serious injury of the child.**

(Continued)

⚠ WARNING

(Continued)
- **Never use the same seat belt for more than one occupant and never attach a seat belt over an infant or child being held on an occupant's lap. Such seat belt use could cause serious injury in the event of an accident.**
- **Periodically inspect seat belt assemblies for excessive wear and damage. Seat belts should be replaced if webbing becomes frayed, contaminated, or damaged in any way. It is essential to replace the entire seat belt assembly after it has been worn in a severe impact, even if damage to the assembly is not obvious.**
- **Children age 12 and under should ride properly restrained in the rear seat.**
- **Infants and small children should never be transported unless they are properly restrained. Restraint systems for infants and small children can be purchased locally and should be used. Check that the system you purchase meets applicable safety standards. Read and follow all the directions provided by the manufacturer.**

(Continued)

⚠ WARNING

(Continued)

- **For child, if the seat belt irritates the neck or face, use a child restraint system appropriately for the child. The seat belts of your vehicle are principally designed for persons of adult size.**
- **Avoid contamination of seat belt webbing by polishes, oils, chemicals, and particularly battery acid. Cleaning may safely be carried out using mild soap and water.**
- **Do not insert any items such as coins, clips, etc. into the seat belt buckles, and be careful not to spill liquids into these parts. If foreign materials get into a seat belt buckle, the seat belt may not work properly.**
- **All seatbacks should always be in an upright position when driving, or seat belt effectiveness may be reduced. Seat belts are designed to offer maximum protection when seatbacks are in the upright position.**

Lap-Shoulder Belt

Emergency Locking Retractor (ELR)

The seat belt has an emergency locking retractor (ELR), which is designed to lock the seat belt only during a sudden stop or impact. It also may lock if you pull the belt across your body very quickly. If this happens, let the belt go back to unlock it, and then pull the belt across your body more slowly.

Safety reminder

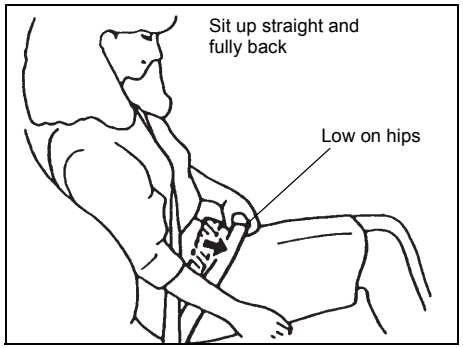

60A038

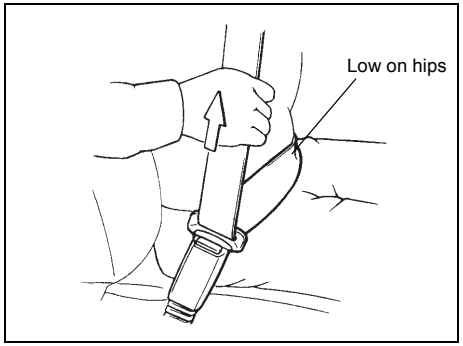

60A040

To reduce the risk of sliding under the belt during a collision, position the lap portion of the belt across your lap as low on your hips as possible and adjust it to a snug fit by pulling the shoulder portion of the belt upward through the latch plate. The length of the diagonal shoulder strap adjusts itself to allow freedom of movement.

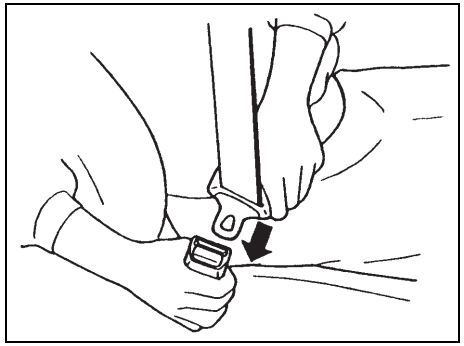

60A036

To fasten the seat belt, sit up straight and far back into the seat, pull the latch plate attached to the seat belt across your body and press it straight into the buckle until you hear a “click”. After pressing the latch plate into the buckle, pull the seat belt to make sure it is securely latched.

(for some vehicles)

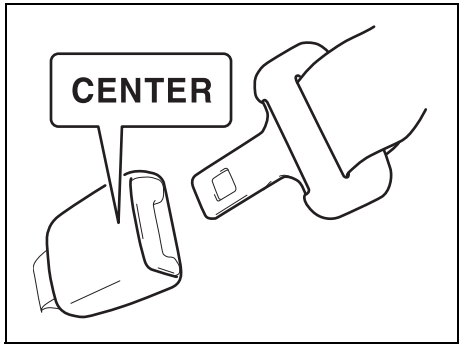

80J2008

NOTE:
The word “CENTER” is marked on the buckle for the rear center belt. The buckles are designed so a latch plate cannot be inserted into the wrong buckle.

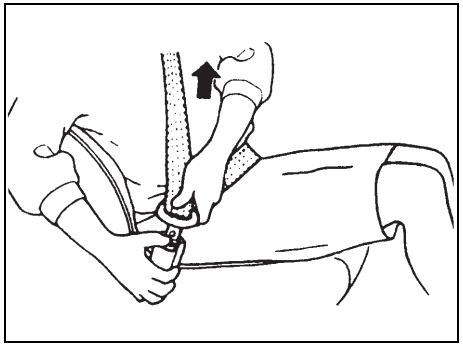

60A039

To unfasten the seat belt, push the red “PRESS” button on the buckle and retract the belt slowly while holding the belt or/and the latch plate.

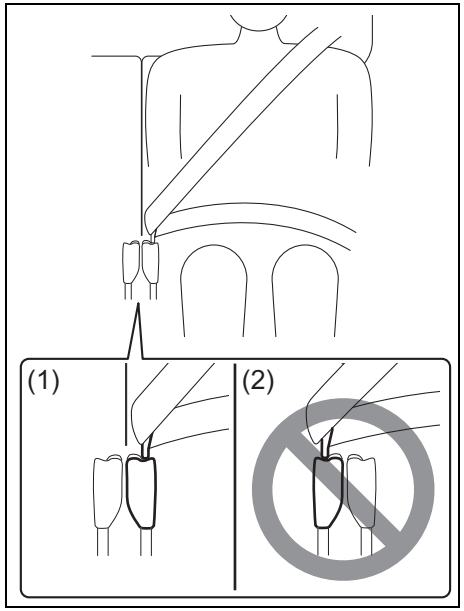

78RB02085

(1) Correct
(2) Wrong

⚠ WARNING

When fastening the 2nd and 3rd row seat belt, always use the closest buckle to you. If you use the buckle for your next rear seat position by mistake, the rear seat belt may not function properly.

Lap Belt (for Some Vehicles)

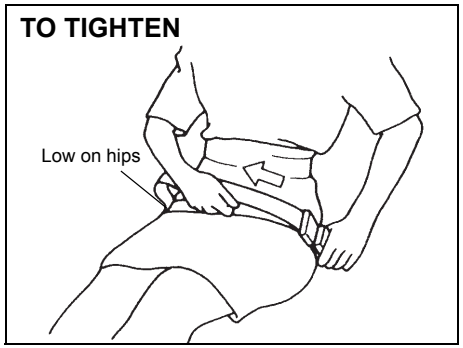

60MH021

Sit up straight and well back in the seat. To fasten the belt, pull the latch plate attached to the seat belt across your hips and press it straight into the buckle until you hear a “click”. To reduce the risk of sliding under the belt during a collision, position the belt across your lap as low on your hips as possible and adjust it to a snug fit.
To tighten the belt, pull the free end of the belt across alongside the lap strap.

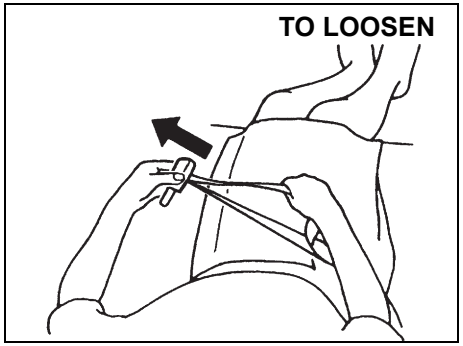

60MH022

To lengthen, release the latch plate from the buckle, pull the latch plate (adjuster) in the direction of the arrow. The latch plate should then be refitted into the buckle and the belt tightened as previously described.

To unfasten the belt, press the release button on the buckle catch.

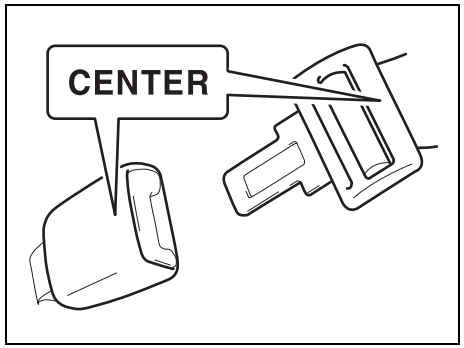

72R0153

NOTE:
The word "CENTER" is marked on the buckle and tongue for the rear center belt. The buckles are designed so a latch plate cannot be inserted into the wrong buckle.

Driver's Seat Belt Reminder Light / Front Passenger's Seat Belt Reminder Light

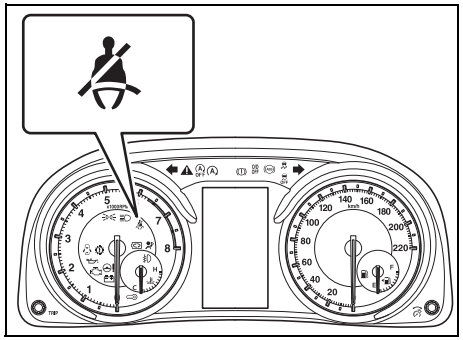

86T0027

When the driver or front passenger does not buckle his or her seat belt, the driver's seat belt reminder light in the instrument cluster will come on or brink and a buzzer will sound as a reminder to the driver or front passenger to buckle his or her seat belt. For more details, refer to the explanation below.

If the driver's or front passenger's seat belt remains unbuckled when the ignition switch is turned "ON" or pushed to "ON" mode, the reminder works as follows:

1) The driver's or front passenger's seat belt reminder light will come on.
2) After the vehicle's speed has reached about 15 km/h, the driver's or front passenger's seat belt reminder light will blink and a buzzer will sound for about 95 seconds.
3) After step 2) has finished, the reminder light will remain on until the driver's or front passenger's seat belt is buckled.

If the driver or front passenger has buckled his or her seat belt and later unbuckles the seat belt, the reminder system will be activated from step 1) or step 2) according to the vehicle's speed. When the vehicle's speed is below about 15 km/h, the reminder will start from step 1). When the vehicle's speed is above about 15 km/h, the reminder will start from step 2).

The reminder will be automatically canceled when the driver's or front passenger's seat belt is buckled or the ignition switch is turned off, or the engine switch is pressed to change the ignition mode to "LOCK" (OFF).

⚠ WARNING

It is absolutely essential that the driver and passengers fasten their seat belts at all times. Persons who are not fastening seat belts have a much greater risk of injury if an accident occurs. Make a regular habit of buckling your seat belt before putting the key in the ignition or pressing the engine switch.

NOTICE

The sensor of the front passenger's seat belt reminder is located in the seat cushion. Therefore, if you spill liquid such as liquid aromatics, soft drinks or juice on the front passenger's seat cushion, immediately wipe it dry with a soft cloth. Otherwise, the sensor of the front passenger's seat belt reminder can be damaged.

NOTE:

- *If you put an object on the passenger's seat, the weight of the object will be sensed by the sensor and the front passenger's seat belt reminder light will come on and then the interior buzzer may beep.*
- *If a child or a small sized person sit on the front passenger's seat or the cushion is put on the front passenger's seat, the weight will not be sensed by the sensor and the interior buzzer may not beep.*

Seat Belt Catch Hole (for 2nd Row Seats)

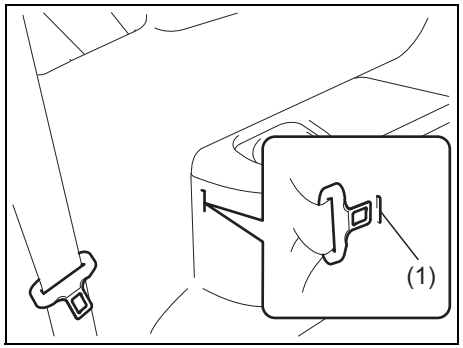

73R0038

NOTE:
To enter to or exit from the 3rd row seat, insert the tongue plate of the buckle into the part (1) before moving the 2nd row seat.

NOTICE

When you move a seatback, make sure the tongue plate of the buckle is inserted in the seat belt catch hole so the seat belts are not caught by the seatback, seat hinge, or seat latch. This helps prevent damage to the belt system.

Seat Belt Inspection

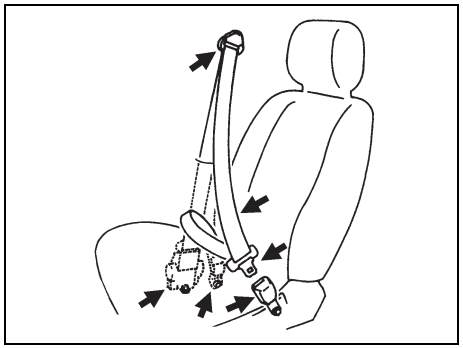

65D209S

Periodically check if the seat belts work properly and are not damaged. Check the webbing, buckles, latch plates, retractors, anchorages, and guide loops. Replace any seat belts which do not work properly or are damaged.

⚠ WARNING

Inspect all seat belt assemblies after any collision. Any seat belt assembly which was in use during a collision (other than a very minor one) should be replaced, even if damage to the assembly is not obvious. Any seat belt assembly even which was not in use during a collision must be replaced the airbags and the seat belt pretensioners activated. The airbags, the pretensioners and load limiter will only function once. In case they did not activate, consult with SUZUKI dealer or a qualified workshop.

Seat Belt Pretensioner System

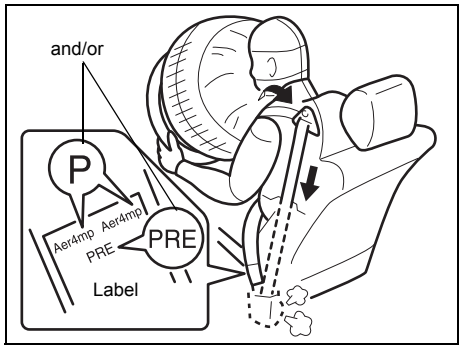

63J269

⚠ WARNING

This section describes your SUZUKI vehicle's seat belt pretensioner system. Read and follow all these instructions carefully to minimize your risk of severe injury or death.

To determine if your vehicle is equipped with a seat belt pretensioner system at the front seating positions, check the label on the seat belt at the bottom part. If the letters "p" and/or "PRE" appear as illustrated, your vehicle is equipped with the seat belt pretensioner system. You can use the pretensioner seat belts in the same manner as ordinary seat belts.
Read this section and "Supplemental restraint system (airbags)" section to learn more about the pretensioner system.

The seat belt pretensioner system works with the supplemental restraint system (airbags). The collision sensors and the electronic controller of the airbag system also control the seat belt pretensioners. The pretensioners are triggered only when there is a frontal collision severe enough to trigger the airbags and the seat belts are fastened. For precautions and general information including servicing the pretensioner system, refer to "Supplemental restraint system (airbags)" section in addition to this "Seat belt pretensioner system" section, and follow all those precautions.

The pretensioner is located in each front seat belt retractor. The pretensioner tightens the seat belt so the belt fits the occupant's body more snugly in the event of a frontal collision. The retractors will remain locked after the pretensioners are activated. Upon activation, some noise will occur and some smoke may be released.

These conditions are not harmful and do not indicate a fire in the vehicle.
The driver and all passengers must be properly restrained by fastening seat belts at all times, whether or not a pretensioner is equipped at their seating position, to minimize the risk of severe injury or death in the event of a collision.

Sit fully back in the seat; sit up straight; do not lean forward or sideways. Adjust the belt so the lap portion of the belt is worn low across the pelvis, not across the waist. Please refer to “Seat adjustment” section and the instructions and precautions about the seat belts in this “Seat belts and child restraint systems” section for details on proper seat and seat belt adjustments.

Please note that the pretensioners along with the airbags will activate in severe frontal collisions. They are not designed to activate in rear impacts, roll-overs, or minor frontal collisions. The pretensioners can be activated only once. If the pretensioners are activated (that is, if the airbags are activated), have the pretensioner system serviced by a SUZUKI dealer or a qualified workshop as soon as possible.

If AIRBAG light on the instrument cluster does not blink or come on briefly when the ignition switch is turned “ON” or pushed to “ON” mode, stays on for more than 10 seconds, or comes on while driving, the pretensioner system or the airbag system may not work properly. Have both systems inspected by a SUZUKI dealer or a qualified workshop as soon as possible.

Service on or around the pretensioner system components or wiring must be performed only by a SUZUKI dealer or a qualified workshop who is specially trained. Improper service could result in unintended activation of pretensioners or could render the pretensioner inoperative. Either of these two conditions may result in personal injury.

To prevent damage or unintended activation of the pretensioners, check that the battery is disconnected and the ignition switch has been in LOCK position or the ignition mode has been LOCK (OFF) for at least 90 seconds before performing any electrical service work on your SUZUKI vehicle.

Do not touch pretensioner system components or wiring. The wires are wrapped with yellow tape or yellow tubing, and the couplers are yellow. When scrapping your SUZUKI vehicle, ask a SUZUKI dealer or a qualified workshop, body repair shop, or scrap yard for assistance.

Child Restraint Systems

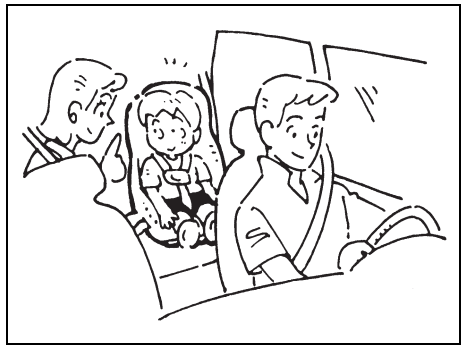

60G332S

The following types of child restraint system are available generally.

Infant restraint - rear seat only

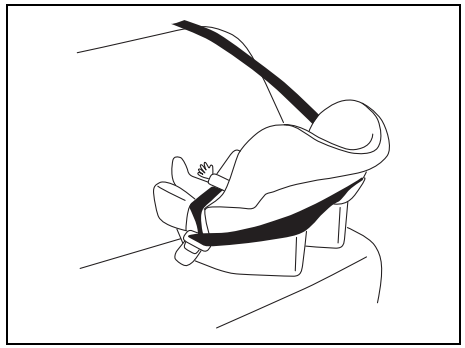

80JC007

Child restraint

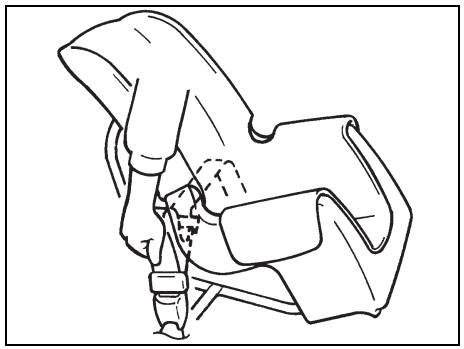

80JC016

Booster seat

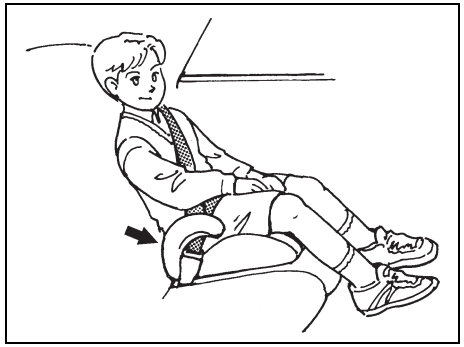

80JC008

SUZUKI highly recommends that you use a child restraint system to restrain infants and small children. Many different types of child restraint systems are available; check that the restraint system you select meets applicable safety standards.

All child restraint systems are designed to be secured in vehicle seats either by seat belts (lap belts or the lap portion of lap-shoulder belts) or by special rigid lower anchor bars built into the seat. Whenever possible, SUZUKI recommends that child restraint systems be installed on the 2nd row seat. According to accident statistics, children are safer when properly restrained in rear seats than in front seats.

If you must use a front-facing child restraint in the front passenger's seat, adjust the passenger's seat as far back as possible.

NOTE:
Observe any statutory regulation about child restraints.

⚠ WARNING

- **Do not install a rear-facing child restraint in the front passenger's seat. If the passenger's front airbag inflates, a child in a rear-facing child restraint could be killed or severely injured. The back of a rear-facing child restraint would be too close to the inflating airbag.**

(Continued)

⚠ WARNING

(Continued)

- **When installing a child restraint system to the rear seat, touching the child's foot or the child restraint system to the seatback of the front seat can cause serious injury to the child in the event of an accident. Adjust the front seat so that it does not touch the child or the child restraint system.**
- **If child restraint systems are not installed properly, children or other occupants could be seriously injured in the event of an accident. Secure the child restraint system firmly according to both this manual and the instruction provided by child restraint system's manufacturer.**
- **If the child is not secured properly in the child restraint system, it could cause serious injury to the child in the event of an accident. Use the child restraint system correctly following the instruction provided by child restraint system's manufacturer.**

Child Restraint System for Countries Applied for UN Regulation No.16

⚠ CAUTION

Adjust the height of the head restraint or remove it for fitting the child restraint, as necessary. However, if a booster cushion not equipped with the head restraint is fitted, the seat head restraint should not be removed. If the head restraint is removed for fitting the child restraint, you need to install it again after removing the child restraint.
If the child restraint is fitted improperly, a child sitting in it could be injured in a collision. (Refer to "Installation with lap-shoulder seat belts" section, "Installation with ISOFIX type anchorages" section and "Installation of child restraint with top tether" section in this section for details.)

Child Restraint (for the 2nd Row Center Seat Type with the Lap Belt)

The suitability of each passenger's seat position for carriage of children and fitting of child restraint system is shown in the table below.

Child restraint systems suitability for each seat position

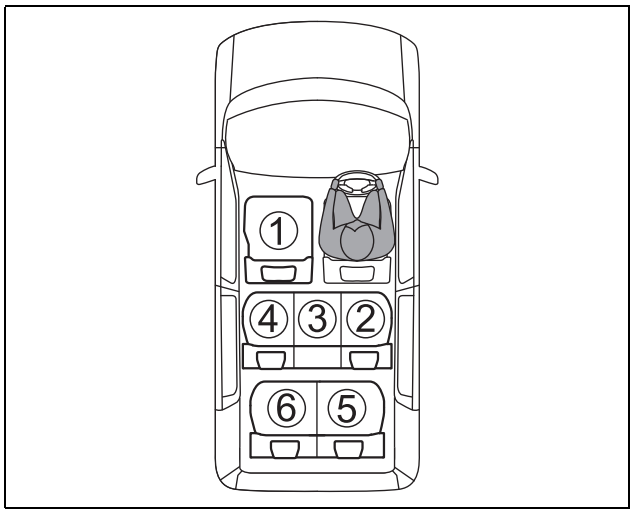

NOTE:
The above illustration shows Right handle drive vehicle. Seat position number of ①, ②, ④, ⑤ and ⑥ is same as Right handle drive vehicle for Left handle drive vehicle.
① Front passenger's seat
② 2nd seat right side
④ 2nd seat left side
⑤ 3rd seat right side
⑥ 3rd seat left side

Seat position No.	Marking	*NOTICE*
①	U	1), 2), 3)
②, ④	U	2), 3)
③	X	
⑤, ⑥	X	

Marking	Description
U	It is suitable for universal category of child restraint system fixed with the vehicle seat belt.
	It is suitable for ISOFIX child restraint system.
	This seat is equipped with Top tether anchorage point.
	Never use a rear-facing child restraint system on the passenger seat.
X	It is not suitable for child restraint system.

NOTICE

1) Move the front seat fully rearward.
2) When you install a front-facing child restraint, if there is a gap or space between the child restraint and the seatback, adjust the seatback angle in order to install the child restraint system properly.
3) If the head restraint interferes with the child restraint system, adjust the height of the head restraint or remove it, as necessary.

Detailed information for child restraint system

Seat position number	Seating position					
	①	②	③	④	⑤	⑥
Seating position suitable for universal belted (YES/NO)	YES[1)]	YES	NO	YES	NO	NO
i-Size seating position (YES/NO)	NO	NO	NO	NO	NO	NO
Seating position suitable for lateral fixture (L1/L2)	NO	X	NO	X	NO	NO
Suitable rear-facing fixture (R1/R2/R3)	NO	R1,R2,R3	NO	R1,R2,R3	NO	NO
Suitable front-facing fixture (F2X/F2/F3)	NO	F2X,F2,F3	NO	F2X,F2,F3	NO	NO

NOTE:
1) When installing the child restraint systems, only a front-facing child restraint is suitable.

Key of letters to be inserted in the above table
YES =Suitable for this seating position
NO = Not suitable for this seating position
X =ISOFIX position is not suitable for ISOFIX child restraint systems in this fixture.

Child Restraint (for the 2nd Row Center Seat Type with the Lap-Shoulder Belt)

The suitability of each passenger's seat position for carriage of children and fitting of child restraint system is shown in the table below.

Child restraint systems suitability for each seat position

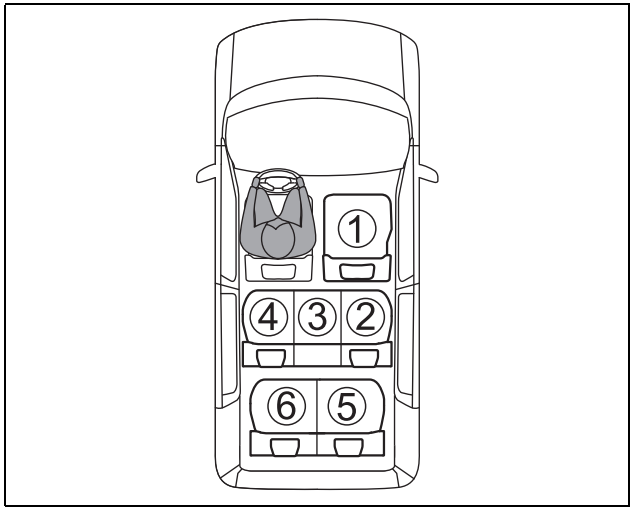

NOTE:
The above illustration shows Left handle drive vehicle.
Seat position number of ①, ②, ④, ⑤ and ⑥ is same as Left handle drive vehicle for Right handle drive vehicle.
① Front passenger's seat
② 2nd seat right side
④ 2nd seat left side
⑤ 3rd seat right side
⑥ 3rd seat left side

Seat position No.	Marking	*NOTICE*
①	U	1), 2), 3)
②, ④	U	2), 3)
③	U	2), 3)
⑤, ⑥	X	

Marking	Description
U	It is suitable for universal category of child restraint system fixed with the vehicle seat belt.
	It is suitable for ISOFIX child restraint system.
	This seat is equipped with Top tether anchorage point.
	Never use a rear-facing child restraint system on the passenger seat.
X	It is not suitable for child restraint system.

NOTICE

1) Move the front seat fully rearward.
2) When you install a front-facing child restraint, if there is a gap or space between the child restraint and the seatback, adjust the seatback angle in order to install the child restraint system properly.
3) If the head restraint interferes with the child restraint system, adjust the height of the head restraint or remove it, as necessary.

Detailed information for child restraint system

Seat position number	Seating position					
	①	②	③	④	⑤	⑥
Seating position suitable for universal belted (YES/NO)	YES[1)]	YES	YES	YES	NO	NO
i-Size seating position (YES/NO)	NO	NO	NO	NO	NO	NO
Seating position suitable for lateral fixture (L1/L2)	NO	X	NO	X	NO	NO
Suitable rear-facing fixture (R1/R2/R3)	NO	R1,R2,R3	NO	R1,R2,R3	NO	NO
Suitable front-facing fixture (F2X/F2/F3)	NO	F2X,F2,F3	NO	F2X,F2,F3	NO	NO

NOTE:
1) When installing the child restraint systems, only a front-facing child restraint is suitable.

Key of letters to be inserted in the above table
YES =Suitable for this seating position
NO = Not suitable for this seating position
X =ISOFIX position is not suitable for ISOFIX child restraint systems in this fixture.

If your child restraint system has no size class (or if you cannot find information in the following table), refer to the child restraint system suitability information for the vehicle or ask the retailer of your child seat.

Mass group	Size class	Fixture	Description
0 (up to 10 kg)	F	L1	Left Lateral facing position Child Restraint Systems (carry-cot)
	G	L2	Right Lateral facing position Child Restraint Systems (carry-cot)
	E	R1	Rear-facing seat
0+ (up to 13kg)	E	R1	Rear-facing seat
	D	R2	Reduced-Size rear-facing toddler Child Restraint Systems
	C	R3	Full-Size rear-facing toddler Child Restraint Systems
I (9kg to 18kg)	D	R2	Reduced-Size rear-facing toddler Child Restraint Systems
	C	R3	Full-Size rear-facing toddler Child Restraint Systems
	B	F2	Reduced-Height front-facing toddler Child Restraint Systems
	B1	F2X	Reduced-Height front-facing toddler Child Restraint Systems
	A	F3	Full-Height front-facing toddler Child Restraint Systems
II (15kg to 25kg)	X	X	–
III (22kg to 36kg)	X	X	–

Key of letters to be inserted in the above table
X = There is no fixture for this mass group.

Installation with Lap-Shoulder Seat Belts

⚠ CAUTION

If your vehicle is equipped with the head restraint, adjust the height of the head restraint or remove it for fitting the child restraint, as necessary. However, if a booster cushion not equipped with the seatback is fitted, the seat head restraint should not be removed. If the head restraint is removed for fitting the child restraint, you need to install it again after removing the child restraint.
If the child restraint is fitted improperly, a child sitting in it could be injured in a collision.

NOTE:
Stow the removed head restraint in the luggage compartment so it will not cause inconvenience to the occupants.

ELR type belt

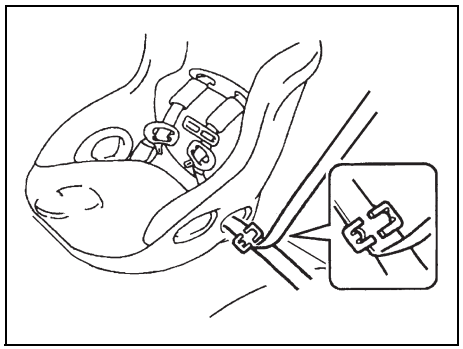

80JC021

Whenever possible, SUZUKI recommends that child restraint systems be installed on the 2nd row seat. According to accident statistics, children are safer when properly restrained in seats than in front seats.

- If you must install the child restraint system on the front passenger's seat, follow instructions below.
  – Slide the seat to the most rear position by the seat position adjustment lever.
  – If there is a gap or space between the child restraint and the seatback, adjust the seatback angle in order to install the child restraint system properly.

Install your child restraint system according to the instructions provided by the child restraint system manufacturer.

Check that the seat belt is securely latched.
Move the child restraint system in all directions to check that it is securely installed.
When you put your child in the child restraint system, appropriately slide the front seat forward not to touch a part of your child's body.

Installation with ISOFIX Type Anchorages

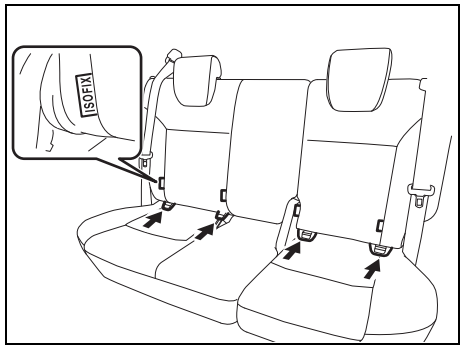

73R0326

Your vehicle is equipped with the lower anchorages in the 2nd row seat outboard seating positions for securing a ISOFIX type of child restraints with the connecting bars. The lower anchorages are located where the rear of the seat cushion meets the bottom of the seatback.

⚠ WARNING

Install the ISOFIX type of child restraint(s) in the only outboard seating positions, not in the central position for the 2nd row seat.

Install the ISOFIX type child restraint system according to the instructions provided by the child restraint system manufacturer. After installation, try moving the child restraint system in all directions especially forward to check that connecting bars are securely latched to the anchorages.

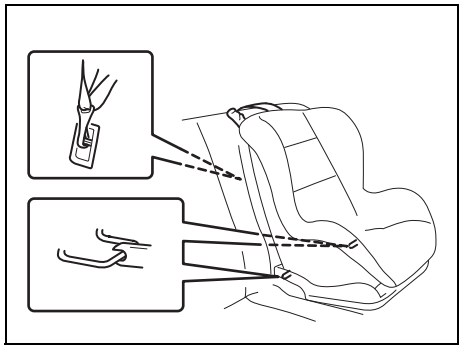

84MM00252

Your vehicle is equipped with the top tether anchorages. Use the top tether strap of the child restraint according to the instructions provided by the child restraint system manufacturer.

Here is a general instruction:

⚠ CAUTION

If your vehicle is equipped with the head restraint, adjust the height of the head restraint or remove it for fitting the child restraint, as necessary. However, if a booster cushion not equipped with the seatback is fitted, the seat head restraint should not be removed. If the head restraint is removed for fitting the child restraint, you need to install it again after removing the child restraint.
If the child restraint is fitted improperly, a child sitting in it could be injured in a collision.

NOTE:
Stow the removed head restraint in the luggage compartment so it will not cause inconvenience to the occupants.

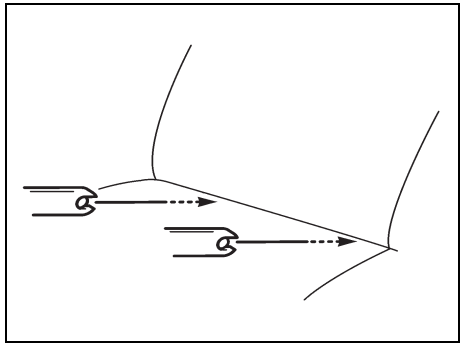

78F114

1) Place the child restraint in the 2nd row seat, inserting the connecting bars to the anchorages between the seat cushion and the seatback.

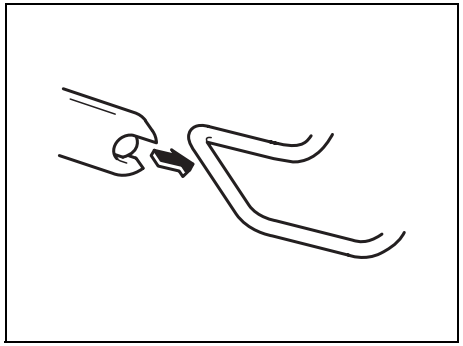

68LM268

2) Use your hands to carefully align the connecting bar tips with the anchorages. Take care not to pinch your fingers.

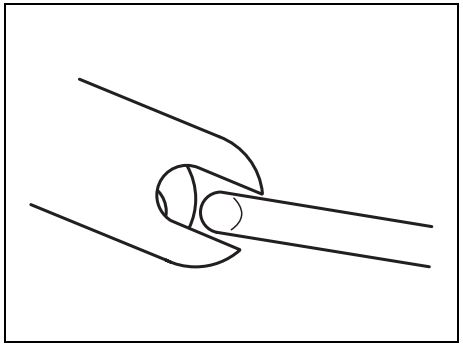

54G184

3) Push the child restraint toward the anchorages so that the connecting bar tips are partially hooked to the anchorages. Use your hands to confirm the position.

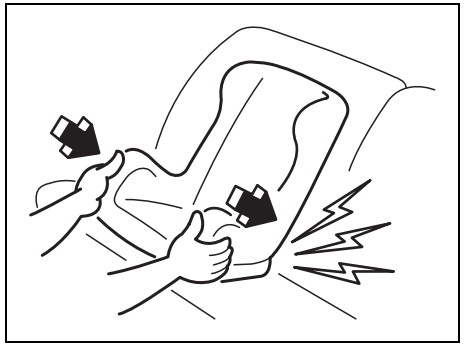

54G185

4) Grasp the front of the child restraint and push the child restraint forcefully to latch the connecting bars. Check that they are securely latched by trying to move the child restraint system in all directions, especially forward.
5) Attach the top tether strap referring to “Installation of child restraint with top tether” section.
   When you put your child in the child restraint system, appropriately slide the front seat forward not to touch a part of your child’s body.

NOTICE
When installing a child restraint system to the 2nd row seat, slide the seat installed the child restraint system as far back as possible.

Installation of Child Restraint with Top Tether

⚠ CAUTION
If your vehicle is equipped with the head restraint, adjust the height of the head restraint or remove it for fitting the child restraint, as necessary. However, if a booster cushion not equipped with the seatback is fitted, the seat head restraint should not be removed. If the head restraint is removed for fitting the child restraint, you need to install it again after removing the child restraint. **If the child restraint is fitted improperly, a child sitting in it could be injured in a collision.**

NOTE:
Stow the removed head restraint in the luggage compartment so it will not cause inconvenience to the occupants.

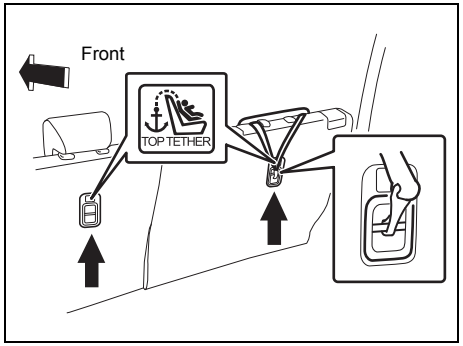

73R0175

Some child restraint systems require the use of a top tether strap. Top tether anchorage brackets are provided in your vehicle at the locations shown in the illustrations.
The number of the top tether anchorage brackets provided in your vehicle depends on the vehicle specification. Install the child restraint system as follows:

1) Secure the child restraint on the 2nd row seat using the procedure described above for securing a restraint system that does not require a top tether strap.
2) Hook the top tether strap to the top tether anchorage bracket and tighten the top tether strap according to the instructions provided by the child restraint system manufacturer. Attach the top tether strap to the corresponding top tether anchorage bracket located directly behind the child restraint.

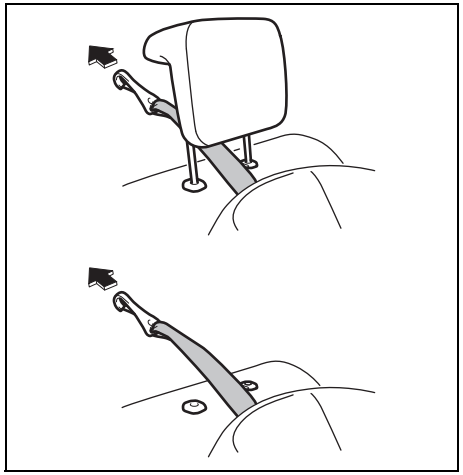

73R0176

3) When routing the top tether strap, pass the top tether strap as shown in the illustration. (Refer to “Head restraints” section for details on how to adjust the height of head restraint or remove it.)
4) Check that cargo does not interfere with routing of the top tether strap.

NOTICE
When installing a child restraint system to the 2nd row seat, slide the seat installed the child restraint system as far back as possible.

Supplemental Restraint System (Airbags)

⚠ WARNING

This section of the owner's manual describes the protection provided by your SUZUKI's SUPPLEMENTAL RESTRAINT SYSTEM (airbags).
Please read and follow ALL these instructions carefully to minimize your risk of severe injury or death in the event of a collision.

Your vehicle is equipped with a Supplemental Restraint System consisting of the following components in addition to a lap-shoulder belt at each front seating position.

1. Driver's front airbag module
2. Front passenger's front airbag module
3. Seat belt pretensioners
4. Airbag controller
5. Forward collision sensor

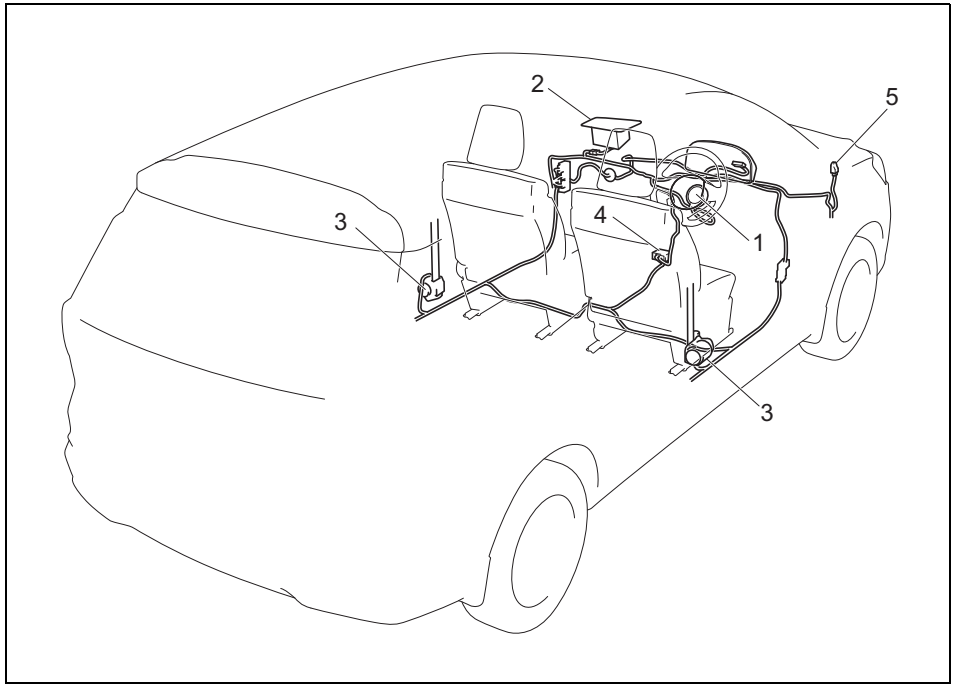

73R0044

⚠ WARNING

An airbag supplements or adds to the collision protection offered by seat belts. The driver and all passengers must be properly restrained by fastening seat belts at all times, whether or not an airbag is mounted at their seating position, to minimize the risk of severe injury or death in the event of a collision.

AIRBAG light



63J030

If the “AIRBAG” light on the instrument cluster does not blink or come on when the ignition switch is first turned to the ON position, or the ignition mode is first changed to “ON”, or the “AIRBAG” light stays on, or comes on while driving, the airbag system (or the seat belt pretensioner system) may not work properly. Have the airbag system inspected by a SUZUKI dealer or a qualified workshop as soon as possible.

⚠ WARNING

If the airbag-related parts are replaced or repaired, which has an impact on the airbag functions, the airbag may activate unnecessarily or may not activate when necessary.
The following situations may give a negative impact to the airbag system. In these cases, consult a SUZUKI dealer or a qualified work shop beforehand.

- **Removing the steering wheel, repairing the areas around the steering wheel. etc.**
- **Center console repair, repairs around the instrument cluster, repairs under the front seat, and repairs of electrical wiring**
- **Installation of audio equipment. etc.**
- **Sheet metal painting and repairs around the dashboard**
- **Replacement of the front seat and repairs around the seat**

Front Airbags

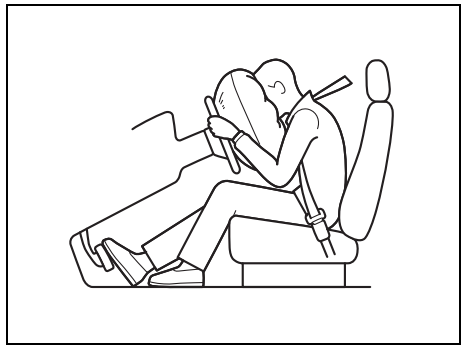

63J113

Front airbag is designed to inflate in severe frontal collisions when the ignition switch is in ON position or the ignition mode is “ON”.

Front airbag is not designed to inflate in rear impacts, side impacts, rollovers or minor frontal collisions, since they would offer no protection in those types of accidents. Remember, since an airbag deploys only one time during an accident, seat belts are needed to restrain occupants from further movements during the accident.

Therefore, an airbag is not a substitute for seat belts. To maximize your protection, always fasten your seat belts. Be aware

that no system can prevent all possible injuries that may occur in an accident.

Driver's front airbag

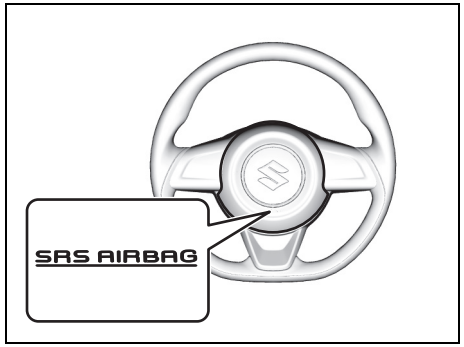

73R0009

Front passenger's front airbag

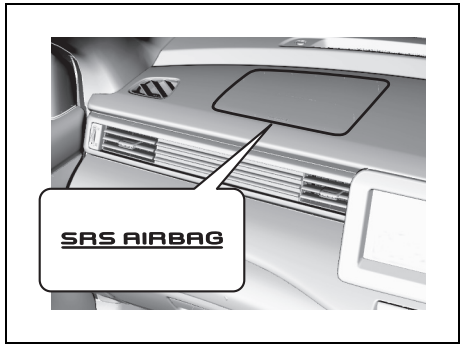

73R0010

The driver's front airbag is located behind the center pad of the steering wheel and the front passenger's front airbag is located behind the passenger's side of the dashboard. The words "SRS AIRBAG" are molded into the airbag covers to identify the location of the airbags.

⚠ WARNING

- **Do not install a rear-facing child restraint in the front passenger's seat. If the passenger's front airbag inflates, a child in a rear-facing child restraint could be killed or severely injured. The back of a rear-facing child restraint would be too close to the inflating airbag.**
- **If the airbag stored place is damaged or cracked, the airbag system may not work properly, which could result in serious injury in the event of a collision. Have your vehicle inspected by a SUZUKI dealer or a qualified workshop.**

Refer to "Seat belts and child restraint systems" section for details on securing your child.

Conditions of front airbags deployment (inflation)

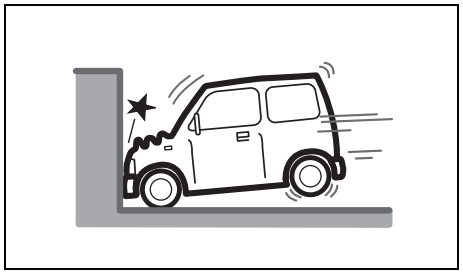

80J097

- Frontal collision with a fixed wall that does not move or deform at more than about 25 km/h (15 mph)

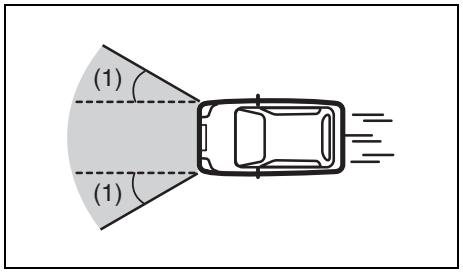

80J098E

- Strong impact equivalent to frontal collision such as above at left and right angles of about 30 degrees (1) or less from the front of your vehicle

Conditions of front airbags may inflate
Receiving a strong impact to the lower body of your vehicle, the front airbags may inflate.

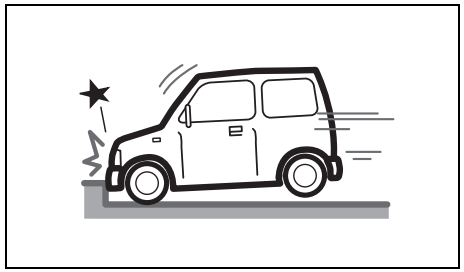

80J099

- Hitting a curb or medial strip

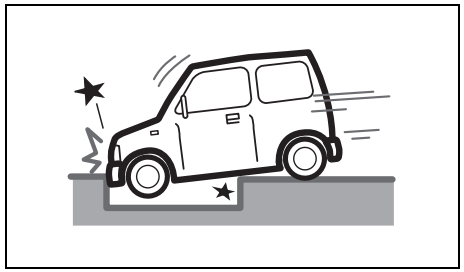

80J100E

- Falling into a deep hole or ditch

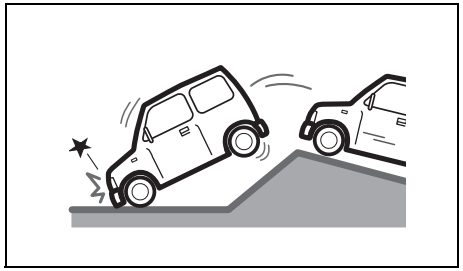

80J101

- Landing hard or falling

Front airbags may not inflate
The front airbags may not inflate when a strong impact has not occurred since the collision object was easy to be deformed or moved, or the collided portion of your vehicle was easy to be deformed.
Also, front airbags may not inflate in many cases when the collision angle is greater than about 30 degrees at left and right angles from the front of your vehicle.

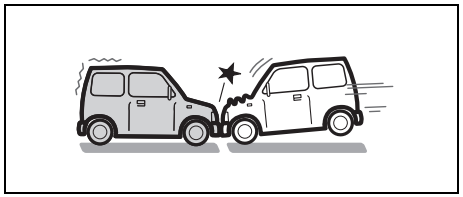

80J102

- Frontal collision to a stopped vehicle at less than about 50 km/h (30 mph)

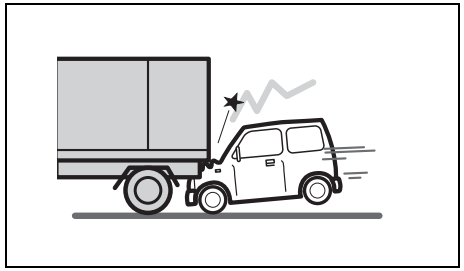

80J103

- Collision that the front of your vehicle goes under the bed of a truck etc.

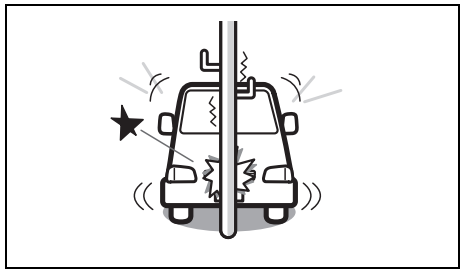

80J104

- Collision with a utility pole or stumpage

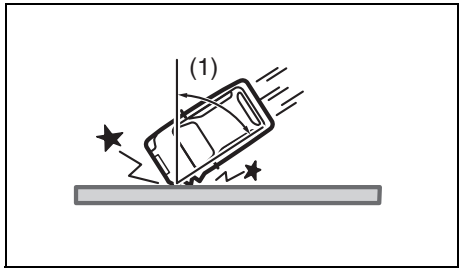

80J105E

- Collision with a fixed wall or guardrail at left and right angles of greater than about 30 degrees (1) from the front of your vehicle

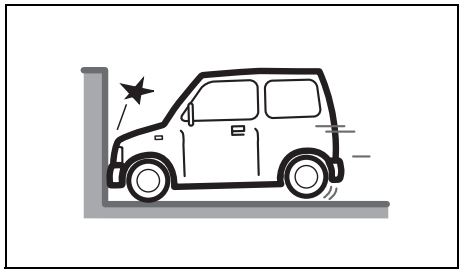

80J106

- Frontal collision with a fixed wall that does not move or deform at less than about 25 km/h (15 mph)

Front airbags do not inflate

Front airbags do not inflate in rear impacts, side impacts or rollovers, etc. However, these might inflate in a strong impact.

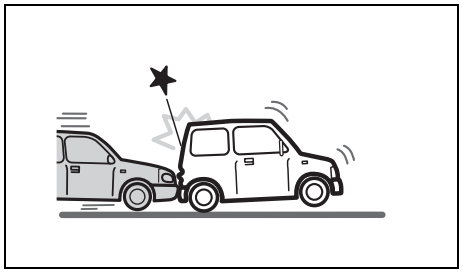

80J120

- Impact from the rear

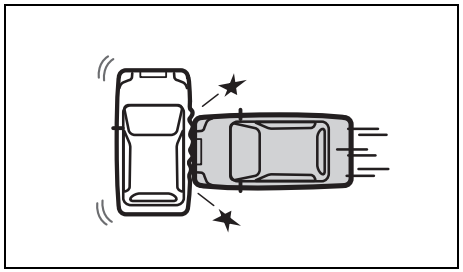

80J119

- Impact from the side

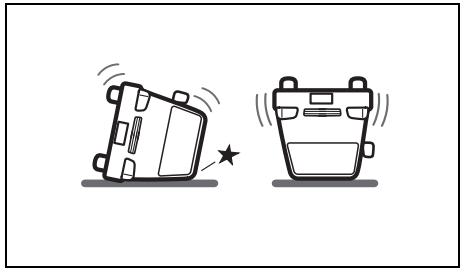

80J110

- Vehicle rollover

Warning Label of SRS Airbag for Front Passenger's Seat



72M00150

You may find this label on the sun visor.

⚠ WARNING

NEVER use a rearward facing child restraint on a seat protected by an ACTIVE AIRBAG in front of it, DEATH or SERIOUS INJURY to the CHILD can occur.

Description of warning label

Symbol	Symbol meaning
	Do not install a rear-facing child restraint system to the front passenger's seat equipped with an airbag.
	If the front passenger's seat airbag were to be deployed, a major impact could be applied to a rear-facing child restraint system and the child.
	For more details, read this owner's manual.

⚠ WARNING

If the AIRBAG light in the instrument cluster ever comes on and stays on, it means that something may be wrong with the airbag system. If this ever happens, have the vehicle serviced immediately, because the airbags may not offer the protection for which they were designed.

How the System Works

In a frontal collision, the collision sensors will detect rapid deceleration, and if the controller judges that the deceleration represents a severe frontal collision, the controller will trigger the inflators. The inflators inflate the appropriate airbags with nitrogen or argon gas. The inflated airbags provide a cushion for your head and upper body. The airbag inflates and deflates so quickly that you may not even realize that it has activated. The airbag will neither hinder your view nor make it harder to exit the vehicle.

⚠ CAUTION

Airbags must inflate quickly and forcefully in order to reduce the chance of serious or fatal injuries. However, an unavoidable consequence of the quick inflation is that the airbag may irritate bare skin, such as the facial area against a front airbag. Wash off any residue as soon as possible to prevent skin irritation. Also, upon inflation, a loud noise will occur and some powder and smoke will be released. These conditions are not harmful and do not indicate a fire in the vehicle. Be aware, however, that some airbag components may be hot for a while after inflation. This may cause burn injury.

A seat belt helps keep you in the proper position for maximum protection when an airbag inflates. Adjust your seat as far back as possible while still maintaining control of the vehicle. Sit fully back in your seat; sit up straight; do not lean over the steering wheel or dashboard. Please refer to the “Seat Adjustment” section and the “Seat Belts and Child Restraint Systems” in this section for details on proper seat and seat belt adjustments.



65D610



65D608

⚠ WARNING

- **The driver should not lean over the steering wheel. The front passenger should not rest his or her body against the dashboard where a front airbag is mounted or a child should not stand in front of the dashboard. Otherwise, he or she will get too close to the dashboard. In these situations, the out-of-position occupant would be too close to an inflating airbag, and may suffer severe injury.**
- **Do not attach any objects to, or place any objects over, the steering wheel or dashboard. Do not place any objects between the airbag and the driver or front passenger. These objects may interfere with airbag operation or may be propelled by the airbag in the event of a collision. Also, these objects may move when you start moving vehicle or while vehicle is moving, they may interfere with driver's view or safe driving. In each conditions may cause severe injury.**
- **Do not strike or apply significant levels of impact to the airbag component areas. It can cause the airbags to malfunction.**

(Continued)

⚠ WARNING

(Continued)

- **Do not modify the system in any way including replacing the steering wheel, placing stickers on the steering wheel pad, painting the steering wheel, or covering the steering wheel with a cover.**
- **Do not place stickers on or paint the instrument panel. Do not install and set up accessories, air fresheners, ETC readers, or portable navigation systems. Do not stand umbrellas or similar in front of airbags.**
- **Excluding genuine SUZUKI parts, do not attach accessories to the front windshield or the rearview mirror.**
- **Even though your vehicle may be moderately damaged in a collision, the collision may not have been severe enough to trigger the airbags to inflate. If your vehicle sustains ANY front-end or side damage, have the airbag system inspected by a SUZUKI dealer or a qualified workshop to ensure it is in proper working order. If the original function of airbag system is damaged, airbag may not function effectively and fully in case of an emergency.**

Your vehicle is equipped with a diagnostic module which records information about the airbag system if the airbags deploy in a collision. The module records information about overall system status, which sensors activated the deployment, and for a certain vehicle only, whether the driver's seat belt was in use.

Servicing the airbag system

⚠ WARNING

- **If the airbag stored place is damaged or cracked, the airbag system may not work properly, which could result in serious injury in the event of a collision. Have your vehicle inspected by a SUZUKI dealer or a qualified workshop.**
- **If you smash the airbag stored place or apply a strong impact to it, the airbag may not work properly or may inflate unexpectedly, resulting in serious injury. Do not smash the airbag stored place or apply a strong impact to it.**
  - **– Center console repair, repairs around the instrument cluster, repairs under the front seat, and repairs of electrical wiring - Installation of audio equipment, etc.**
  - **– Sheet metal painting and repairs around the dashboard**
  - **– Replacement of the front seat and repairs around the seat**
  - **– Repairs around the front pillar, the back pillar or the roof side**
  - **– Repairs around the center pillar**

If your vehicle ever gets in deep water and the driver's floor is submerged, the airbag controller could be damaged. If it does, have the airbag system inspected by the SUZUKI dealer or a qualified workshop as soon as possible.

Special procedures are required for servicing or replacing an airbag. For that reason, only a SUZUKI dealer or a qualified workshop should be allowed to service or replace your airbags. Please remind anyone who services your SUZUKI that it has airbags.

Service on or around airbag components or wiring must be performed only by a SUZUKI dealer or a qualified workshop. Improper service could result in unintended airbag deployment or could render the airbag inoperative. Either of these two conditions may result in severe injury.

To prevent damage or unintended inflation of the airbag system, be sure the battery is disconnected and the ignition switch has been in the LOCK position for at least 90 seconds before performing any electrical service work on your SUZUKI. Do not touch airbag system components or wires. The wires are wrapped with yellow tape or yellow tubing, and the couplers are yellow for easy identification.

Scrapping a vehicle that has an uninflated airbag can be hazardous. Ask your dealer, body repair shop or scrap yard for help with disposal.

⚠ CAUTION

If you do not handle the airbags properry, they may inflate unexpectediy, resulting in personal injury. When scrapping the airbags or the vehicle that has the airbags, consult a SUZUKI dealer or a qualified workshop.

Exhaust Gas Warning

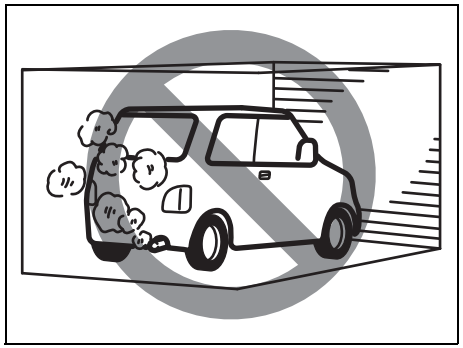

52D334

⚠ WARNING

Avoid breathing exhaust gases. Exhaust gases contain carbon monoxide, a potentially lethal gas that is colorless and odorless. Since carbon monoxide is difficult to detect by itself, be sure to take the following precautions to help prevent carbon monoxide from entering your vehicle.

- **Do not leave the engine running in garages or other confined areas.**

(Continued)

⚠ WARNING

(Continued)

- **Do not park with the engine running for a long period of time, even in an open area. If it is necessary to sit for a short time in a parked vehicle with the engine running, make sure the air intake selector is set to "FRESH AIR" and the blower is at high speed.**
- **Avoid operating the vehicle with the tailgate or trunk open. If it is necessary to operate the vehicle with the tailgate or trunk open, make sure all windows are closed, and the blower is at high speed with the air intake selector set to "FRESH AIR".**
- **To allow proper operation of your vehicle's ventilation system, keep the air inlet grille in front of the windshield clear of snow, leaves or other obstructions at all times.**
- **Keep the exhaust tailpipe area clear of snow and other material to help reduce the buildup of exhaust gases under the vehicle. This is particularly important when parked in blizzard conditions.**
- **Have the exhaust system inspected periodically for damage and leaks. Any damage or leaks should be repaired immediately.**

MEMO

BEFORE DRIVING

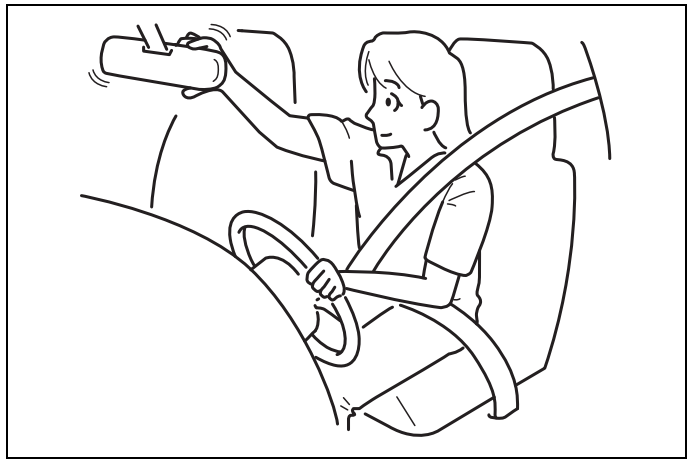

60G404

Keys 2-1
Door Locks 2-2
Keyless Entry System Transmitter / Keyless Push Start System Remote Controller (if equipped) 2-6
Theft Deterrent Alarm System (if equipped) 2-14
Theft Deterrent Light (if equipped) 2-18
Windows 2-18
Mirrors 2-21
Instrument Cluster 2-25
Speedometer 2-26
Tachometer 2-26
Fuel gauge 2-26
Temperature Gauge 2-27
Brightness Control 2-27
Information Display 2-28
Warning and Indicator Lights 2-52
Lighting Control Lever 2-62
Front Fog Light Switch (if equipped) 2-67
Turn Signal Control Lever 2-67
Hazard Warning Switch 2-68
Windshield Wiper and Washer Lever 2-68
Tilt Steering Lock Lever 2-71
Horn 2-71
Heated Rear Window Switch (if equipped) 2-72
Vehicle Loading 2-72
Trailer Towing Your Vehicle 2-73

Keys

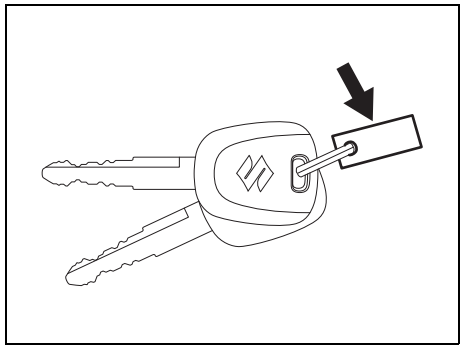

73R0130

Your vehicle comes with a pair of identical keys. Keep the spare key in a safe place. One key can open all of the locks on the vehicle.

The key identification number is stamped on a metal tag provided with the keys or on the keys. Keep the tag (if equipped) in a safe place. If you lose your keys, you will need this number to have new keys made. Write the number below for your future reference.

KEY NUMBER:

Immobilizer System

This system is designed to help prevent vehicle theft by electronically disabling the engine starting system.
The engine can be started only with your vehicle's original immobilizer ignition key or keyless push start system remote controller, which has an electronic identification code programmed in it. The key or remote controller communicates the identification code to the vehicle when the ignition switch is turned "ON" or pushed to "ON" mode. If you need to make
spare keys or remote controllers, see a SUZUKI dealer or a qualified workshop. The vehicle must be programmed with the correct identification code for the spare. A key made by an ordinary locksmith will not work.

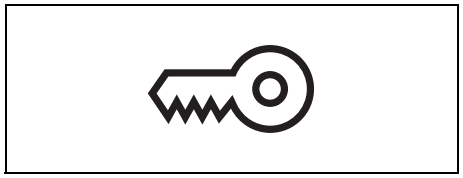

80JM122

If the immobilizer/keyless push start system warning light blinks when the ignition switch is in ON position or the ignition mode is "ON", the engine will not start.

For vehicles without a keyless push start system
If this light blinks, turn the ignition switch to LOCK position, and then turn it back to ON position.
If the light still blinks after the ignition switch is turned back to ON position, there may be something wrong with your key or with the immobilizer system. Ask a SUZUKI dealer or a qualified workshop to have the system inspected.

For vehicles with a keyless push start system
If this light blinks, change the ignition mode to "LOCK" (OFF), and then change it back to "ON". Also refer to "If the "PUSH" Indicator light blinks and the engine cannot be started" in "Starting engine (vehicle with keyless push start system) (if equipped)" in "OPERATING YOUR VEHICLE" section.
If the light still blinks after the ignition mode is changed back to "ON", there may be something wrong with your key or with the immobilizer system. Ask a SUZUKI dealer or a qualified workshop to have the system inspected.

The immobilizer/keyless push start system warning light may also blinks if the remote controller is not in the vehicle when you close the door or attempt to start the engine.

NOTE:
- *If you lose your immobilizer ignition key or remote controller, ask a SUZUKI dealer or a qualified workshop as soon as possible to deactivate the lost one, and to make a new key or remote controller.*
- *If you own other vehicles with immobilizer keys, keep those keys away from the ignition switch or the engine switch when using your SUZUKI vehicle. Otherwise, or the engine may not be started because they may interfere with your SUZUKI vehicle's immobilizer system.*
- *If you attach any metal objects to the immobilizer key or remote controller, it may not start the engine.*

NOTICE

The immobilizer key and remote controller are sensitive electronic instruments.
To avoid damaging them:
- **Do not expose them to impacts, moisture or high temperature such as on the dashboard under direct sunlight.**
- **Keep them away from magnetic objects.**

NOTICE

Do not modify or remove the immobilizer system.
If modified or removed, the system cannot be properly operated.

This immobilizer system is maintenance-free

Ignition Key Reminder

A buzzer sounds intermittently to remind you to remove the ignition key if it is in the ignition switch when the driver's door is opened.

Door Locks

Side Door Locks

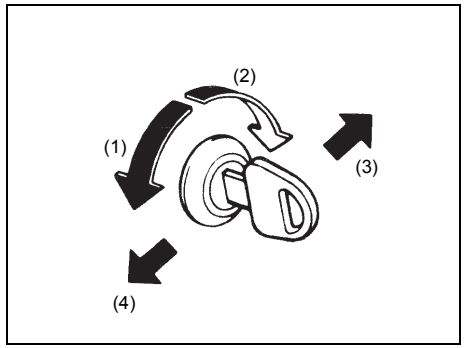

60B008

(1) UNLOCK
(2) LOCK
(3) Front
(4) Rear

To lock a front door from outside the vehicle:

- Insert the key and turn the top of the key toward the front of the vehicle, or
- Turn the lock knob forward, then pull and hold the door handle as you close the door.

To unlock a front door from outside the vehicle, insert the key and turn the top of the key toward the rear of the vehicle.

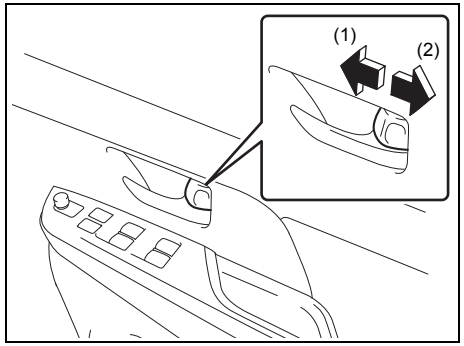

73R0001

(1) LOCK
(2) UNLOCK

To lock a door from inside the vehicle, turn the lock knob forward. Turn the lock knob rearward to unlock the door.

To lock a rear door from outside the vehicle, turn the lock knob forward and close the door. You do not need to pull and hold the door handle as you close the door.

NOTE:
Be sure to hold the door handle when you close a locked front door, or the door will not remain locked.

Central Door Locking System

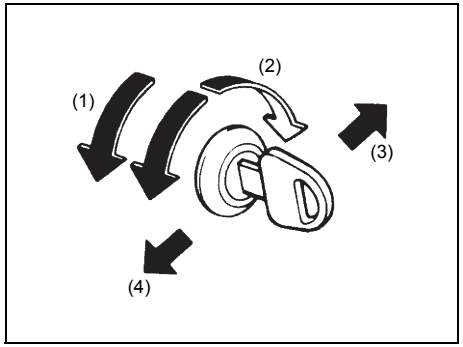

54G294

(1) UNLOCK
(2) LOCK
(3) Front
(4) Rear

You can lock and unlock all doors (including the tailgate) simultaneously by using the key in the driver's door lock.

To lock all doors simultaneously, insert the key in the driver's door lock and turn the top of the key toward the front of the vehicle once.

To unlock all doors simultaneously, insert the key in the driver's door lock and turn the top of the key toward the rear of the vehicle twice.

To unlock the driver's door only, insert the key in that door lock and turn the top of the key toward the rear of the vehicle once.

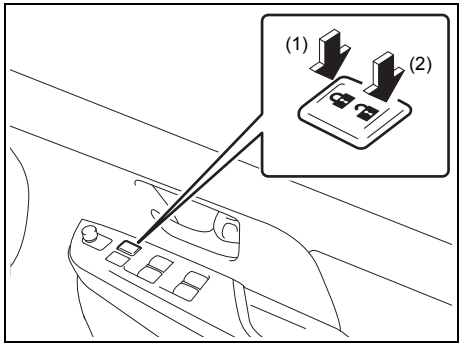

73R0002

(1) LOCK
(2) UNLOCK

You can also lock or unlock all doors by depressing the front or rear of the switch, respectively.

NOTE:
- *You can also lock or unlock all doors by operating the transmitter or remote controller. Refer to "Keyless push start system remote controller / Keyless entry system transmitter (if equipped)" in this section.*
- *If your vehicle is equipped with the keyless push start system, you can also lock or unlock all doors by pushing the request switch. Refer to "Keyless push start system remote controller / Keyless entry system transmitter (if equipped)" in this section.*

Child-Proof Locks (Rear Door)

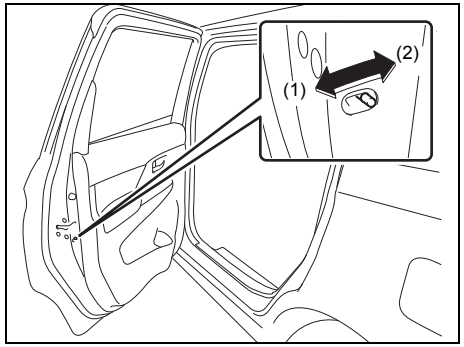

73R0003

(1) LOCK
(2) UNLOCK

Each of the rear doors is equipped with a child-proof lock which can be used to help prevent unwanted opening of the door from inside the vehicle. When the lock lever is in LOCK position (1), the rear door can only be opened from outside. When the lock lever is in UNLOCK position (2), the rear door can be opened from inside or outside.

⚠ WARNING

Place the child-proof lock in LOCK position whenever children are seated in the rear.

Tailgate

⚠ WARNING

Always make sure that the tailgate is closed and latched securely. Completely closing the tailgate helps prevent occupants from being thrown from the vehicle in the event of an accident. Completely closing it also helps keep exhaust gases from entering the vehicle.

Type 1

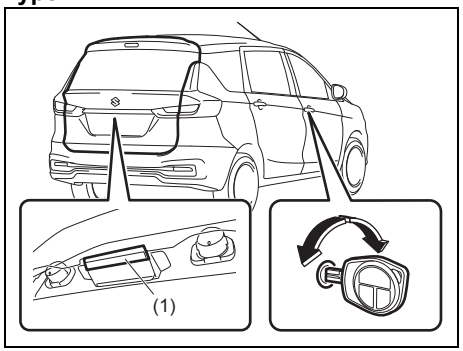

73R0019

(1) Tailgate handle

You can lock and unlock the tailgate by using the key in the driver's door lock.

To open the tailgate, pull up the tailgate handle (1) and lift the tailgate.

If you cannot unlock the tailgate by using the key in the driver's door lock due to a discharged lead-acid battery or malfunction, follow the procedure below to unlatch the tailgate from inside the vehicle.

1) Fold the rear seat forward for easier access. Refer to "Folding rear seats" section for details on how to fold the rear seat forward.

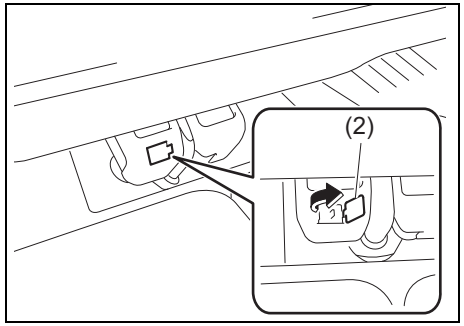

73R0020

2) Open the cover (2) in the lock mechanism of the tailgate.

NOTE:
Be careful not to lose the cover (2) because it is small and detachable.

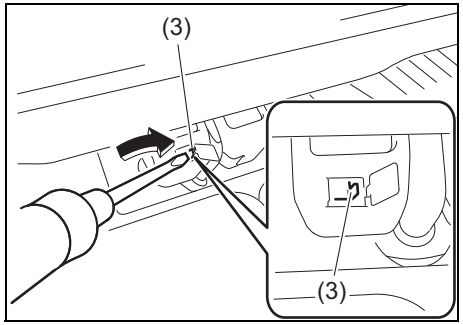

73R0021

3) Move the lever (3) in arrow direction by using a flat-bladed screwdriver to unlock the tailgate.
4) Push open the tailgate from inside. The tailgate will be latched again by simply closing the tailgate.

If the tailgate cannot be unlatched by pushing the unlatch switch (1), have the vehicle inspected by a SUZUKI dealer or a qualified workshop.

⚠ CAUTION

Check that there is no one near the tailgate when pushing open the tailgate from inside the vehicle.

Type 2

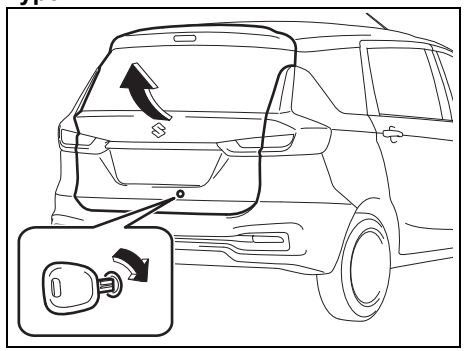
73R0023

To open the tailgate, insert the key and turn it clockwise to unlatch and lift the tailgate.

NOTICE

Do not use the key to lift up the tailgate, or the key may break off in the lock.

Keyless Entry System Transmitter / Keyless Push Start System Remote Controller (if equipped)

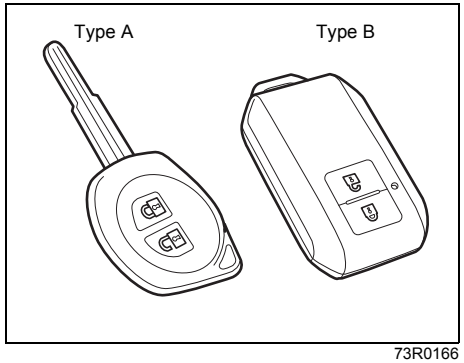

73R0166

Your vehicle is equipped with either a keyless entry system transmitter (Type A) or a keyless push start system remote controller (Type B). The transmitter (Type A) has only a keyless entry function. The remote controller (Type B) has a keyless entry function and a keyless push start system. For details, refer to the following explanations.

⚠ WARNING

Radio waves from the keyless push start system antenna(s) may interfere with operation of electrical medical equipment such as pacemakers. Failure to take the precautions listed below can increase the risk of severe injury or death due to radio wave interference.

- **Anyone who uses electrical medical equipment such as a pacemaker should consult the medical equipment supplier or their medical advisor about whether radio waves from the antenna(s) can interfere with the medical equipment.**
- **If radio wave interference is a concern, have the function of the antenna(s) disabled by a SUZUKI dealer or a qualified workshop.**

Keyless Entry System Transmitter (Type A)

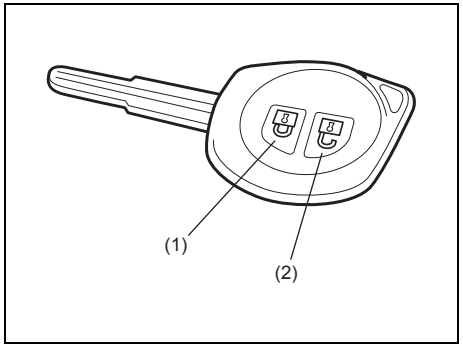

72R0148

(1) LOCK button
(2) UNLOCK button

You can lock or unlock all doors (including the tailgate) simultaneously by operating the transmitter near the vehicle.

Central door locking system

- To lock all doors, push LOCK button (1) once.
- To unlock only the driver's door, push UNLOCK button (2) once.
- To unlock other doors, push UNLOCK button (2) once again.

NOTE:
You can switch the function that unlocks all doors from requiring two pushes to requiring one push, and vice versa, via the information display setting mode. For details on how to use the information display, refer to "Information display" in this section.

The turn signal lights will flash once when the doors are locked.

When the doors are unlocked:
- The turn signal lights will flash twice.
- If the interior light switch is in the "DOOR" position, the interior light will turn on for about 15 seconds and then fade out. If you insert the key into the ignition switch during this time, the light will start to fade out immediately.

Be sure the doors are locked after you operate the LOCK button (1).

NOTE:
If no door is opened within about 30 seconds after the UNLOCK button (2) is operated, the doors will automatically lock again.

NOTE:
- *The maximum operating distance of the keyless entry system transmitter is about 5 m (16 ft.), but this can vary depending on the surroundings, especially near other transmitting devices such as radio towers or CB (Citizen's Band) radios.*
- *The door locks cannot be operated with the transmitter, if the ignition key is inserted in the ignition switch.*
- *When any door is open, the door locks can be operated only unlock with the transmitter.*
- *If you lose one of the transmitters, ask a SUZUKI dealer or a qualified workshop dealer as soon as possible for a replacement. Be sure to have your dealer program the new transmitter code in your vehicle's memory so that the old code is erased.*

NOTICE

The transmitter is a sensitive electronic instrument. To avoid damaging the transmitter:
- **Do not expose it to impacts, moisture or high temperature such as by leaving it on the dashboard under direct sunlight.**
- **Keep the transmitter away from magnetic objects such as a television.**

Battery replacement

If the transmitter becomes unreliable, replace the battery.

To replace the battery of the transmitter:

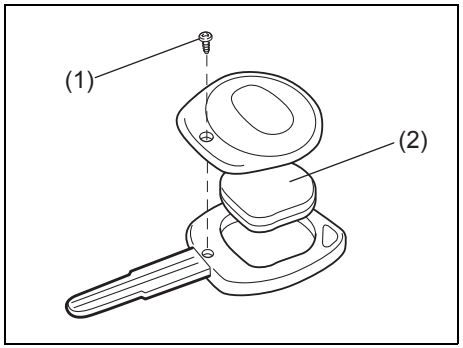

68LM248

1) Remove the screw (1), and open the transmitter cover.
2) Remove the transmitter (2).

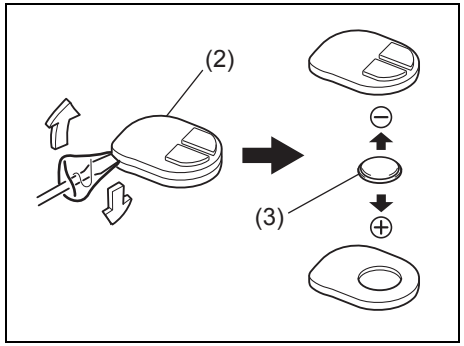

73R0197

(3) Button type lithium battery:
CR1616 or equivalent

3) Put the edge of a flat blade screwdriver covered with a soft cloth in the slot of the transmitter (2) and pry it open.
4) Replace the battery (3) so its + terminal faces the "**+**" mark of the transmitter.
5) Close the transmitter and install it into the transmitter holder.
6) Close the transmitter cover, install and tighten the screw (1).
7) Make sure the door locks can be operated with the transmitter.
8) Dispose of the used battery properly according to applicable rules or regulations. Do not dispose of lithium batteries as ordinary household trash.

⚠ WARNING

Swallowing a lithium battery may cause serious internal injury. Do not allow anyone to swallow a lithium battery. Keep lithium batteries away from children and pets. If swallowed, contact a physician immediately.

NOTICE

- **The transmitter is a sensitive electronic instrument. To avoid damaging it, do not expose it to dust or moisture or tamper with internal parts.**
- **When replacing the battery by yourself, the transmitter controller could be damaged affected by static electricity. Discharge the static electricity built up in your body by touching metal before replacing the battery.**

NOTE:
Used batteries must be disposed of properly according to applicable rules or regulations and must not be disposed of with ordinary household trash.

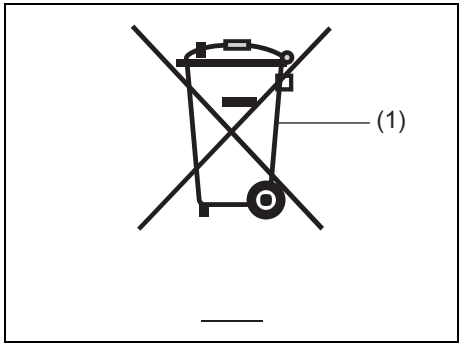

80JM133

(1) Crossed-out wheeled bin symbol

The crossed-out wheeled bin symbol (1) indicates that a used battery should be collected separately from ordinary household trash.

By ensuring the used battery is disposed of or recycled correctly, you will help prevent potential negative consequences for the environment and human health, which could otherwise be caused by inappropriate battery disposal. The recycling of materials will help to conserve natural resources. For more detailed information about disposing of or recycling the used battery, consult a SUZUKI dealer or a qualified workshop.

Keyless Push Start System Remote Controller (Type B)

The remote controller enables the following operations:
- You can lock or unlock the doors by pushing LOCK/UNLOCK buttons on the remote controller. Refer to the explanation in this section.
- You can lock or unlock the doors by pushing the request switch in the front outside door handles. For details, refer to the explanation in this section.
- You can start the engine without using an ignition key. For details, refer to “Engine Switch (Vehicle with Keyless Push Start System)” in “OPERATING YOUR VEHICLE” section.

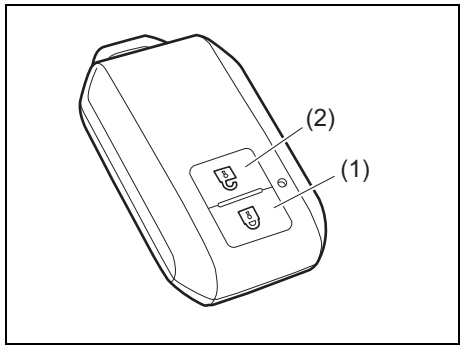

52RM20060

(1) LOCK button
(2) UNLOCK button

You can lock or unlock all doors (including the tailgate) simultaneously by operating the remote controller near the vehicle.

Central door locking system
- To lock all doors, push LOCK button (1) once.
- To unlock only the driver’s door, push UNLOCK button (2) once.
- To unlock other doors, push UNLOCK button (2) once again.

NOTE:
You can switch the function that unlocks all doors from twice operations to once operation, and vice versa, via the setting mode of the information display. For details on how to use the information display, refer to “Information Display” in this section.

The turn signal lights will flash once and the exterior buzzer will sound once when the doors are locked.

When the doors are unlocked:
- The turn signal lights will flash twice and the exterior buzzer will sound twice.
- If the interior light switch is in the “DOOR” position, the interior light will turn on for about 15 seconds and then fade out. If you press the engine switch during this time, the light will start to fade out immediately.

Be sure the doors are locked after you operate the LOCK button (1).

NOTE:
If no door is opened within about 30 seconds after the UNLOCK button (2) is operated, the doors will automatically lock again.

NOTE:
You can set whether the exterior buzzer sounds when locking or unlocking the doors via the setting mode of the information display. For details on how to use the information display, refer to “Information Display” in this section.

NOTE:
- *The maximum operating distance of the remote controller is about 5 m (16 ft.), but this can vary depending on the surroundings, especially near other transmitting devices such as radio towers or CB (Citizen’s Band) radios.*
- *The door locks cannot be operated with the remote controller if the ignition mode is other than the “LOCK” (OFF).*
- *When any door is open, if you push the LOCK button on the remote controller, the exterior buzzer will sound and doors cannot be locked.*
- *If you lose one of the remote controllers, ask a SUZUKI dealer or a qualified workshop dealer as soon as possible for a replacement. Be sure to have your dealer program the new remote controller code in your vehicle’s memory so that the old code is erased.*

Keyless unlocking/locking using the request switches

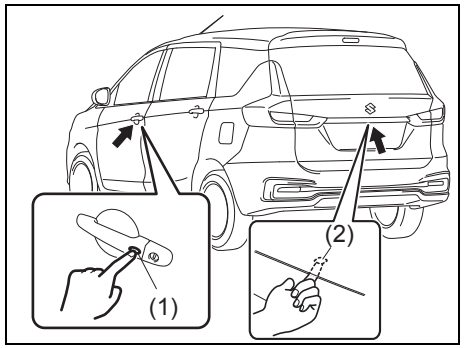

73R0022

When the remote controller is within the operating range described in this section, you can lock or unlock the doors (including the tailgate) by pushing the request switch (1) on the driver's door handle, front passenger's door handle or tailgate (2).

To lock all doors when all doors are unlocked:

- To lock all doors, push one of the request switches once.

The turn signal lights will flash once and the exterior buzzer will sound once when the doors are locked.

To unlock a door or all doors:

- Push one of the request switches once to unlock the respective door or the tailgate.
- Push one of the request switches twice to unlock all doors.

NOTE:
You can switch the function that unlocks all doors from twice operations to once operation, and vice versa, via the setting mode of the information display. For details on how to use the information display, refer to "Information Display" in this section.

When the doors are unlocked:

- The turn signal lights will flash twice and the exterior buzzer will sound twice.
- If the interior dome light switch is in DOOR position, the interior dome light will turn on for about 15 seconds and then fade out. If you press the engine switch during this time period, the light will start to fade out immediately.

Be sure the doors are locked after you operate the request switch to lock the doors.

NOTE:

- *The door locks cannot be operated by the request switch under the following conditions:*
  - *If any door or tailgate is open or is not completely closed.*
  - *If the ignition mode is other than "LOCK" (OFF).*
- *If no doors are opened within about 30 seconds after unlocking the doors by pushing the request switch, the doors will be locked again automatically.*

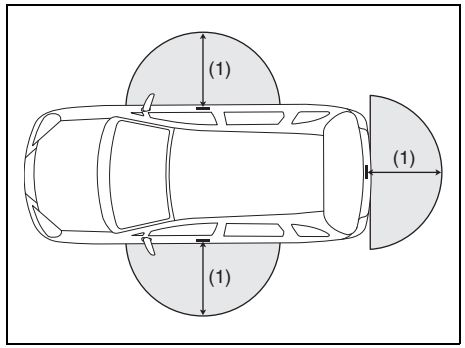

80J056

(1) 80 cm (2 1/2 feet)

When the remote controller is within approximately 80 cm (2 1/2 feet) from a front door handle or the tailgate switch, which is specified as the operating range, you can lock or unlock the doors by pushing the request switch.

NOTE:
- *If the remote controller is outside the operating range described above, you will not be able to operate the request switch.*
- *If the battery of the remote controller runs down or there are strong radio waves or noise, the operating range may be reduced or the remote controller may become inoperative.*
- *If the remote controller is too close to the door glass, the request switches may not operate.*
- *If a spare remote controller is in the vehicle, the request switches may not operate normally.*
- *The remote controller will only activate a request switch if it is within the activate operating range. For example, if the remote controller is within the operating range for the driver's door request switch but not for the front passenger's door request switch not for the tailgate request switch, the driver's door switch can be operated but the front passenger's door switch or tailgate switch cannot be operated.*

NOTICE

The remote controller is a sensitive electronic instrument. To avoid damaging the remote controller:
- **Do not expose it to impacts, moisture or high temperature such as by leaving it on the dashboard under direct sunlight.**
- **Keep the remote controller away from magnetic objects such as a television.**

NOTE:
The keyless push start system may not function correctly in certain environments or under certain operating conditions such as the followings:
- *When there are strong electromagnetic wave coming from a television, power station or a cellular phone.*
- *When the remote controller is in contact with or covered by a metal object.*
- *When a radio wave type remote keyless entry is used nearby.*
- *When the remote controller is placed near an electronic device such as personal computer.*

Some additional precautions you should take and information you should be aware of are:
- *Make sure the key is always stowed in the remote controller. If the remote controller becomes unusable, you will not be able to lock or unlock the doors without the key.*
- *Make sure that the driver always carries the remote controller.*
- *If you lose one of the remote controllers, ask a SUZUKI dealer or a qualified workshop as soon as possible for a replacement. Be sure to have your dealer program the new remote controller code in your vehicle's memory so that the old code is erased.*
- *You can use up to four remote controllers and the keys for your vehicle. Ask a SUZUKI dealer or a qualified workshop for details.*
- *The battery life of the remote controller is about two years, but it can vary depending on usage conditions.*

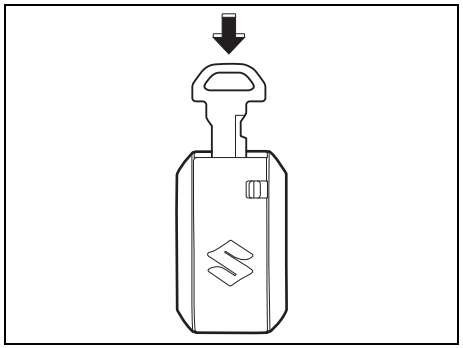

52RM20080

To stow the key into the remote controller, push the key in the remote controller until you hear a click.

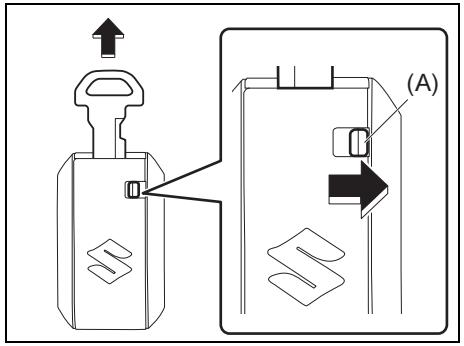

52RM20090

To remove the key from the remote controller, slide the lock knob (A) in the direction of the arrow and pull the key out from the remote controller.

Request switch warning buzzer

This exterior buzzer beeps for about 2 seconds in the following conditions to warn you that the request switch is not working:

- The request switch is pressed after all doors are closed with the ignition mode changed to ACC or ON position by pressing the engine switch when the controller is outside the vehicle.
- The request switch is pressed under any of the following conditions with the ignition mode in “LOCK” (OFF) position.
  – The remote controller is left inside the vehicle.
  – Any door (including the tailgate) is open.

To securely lock the doors and the tailgate using the remote controller:
With the ignition mode changed to “LOCK” (OFF) by pressing the engine switch, bring out the remote controller. Press the request switch again and check that all doors are completely locked.

Reminder function

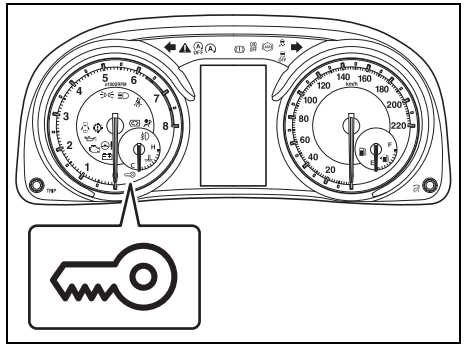

86T0029

If the remote controller is not in the vehicle under the following conditions, the buzzer sounds intermittently for about 2 seconds and the immobilizer/keyless push start system warning light on the instrument cluster blinks:
When one or more doors are opened and all of the doors are later closed with the ignition mode is other than “LOCK”.
While the warning light is on, the engine can not start.

The indicator light will turn off within several seconds after the remote controller is returned to an area of the vehicle other than the rear luggage area.

If the remote controller is left in the vehicle and you try to lock the driver's door or front passenger's door as described below, the door will be automatically unlocked.

- If you open the driver's door and try to lock the door by turning the lock knob forward or pushing the power door locking switch, the driver's door will be automatically unlocked.
- If you open the front passenger's door and try to lock the door by turning the lock knob forward or pushing the power door locking switch, the front passenger's door will be automatically unlocked.

NOTE:

- *The reminder will not operate when the remote controller is on the instrument panel, in the glove box, in a storage compartment, in the sun visor or on the floor etc.*
- *Be sure that the driver always carries the remote controller.*
- *Do not leave the remote controller in the vehicle when leaving the vehicle.*

Battery replacement

If the remote controller becomes unreliable, replace the battery.

To replace the battery of the remote controller:

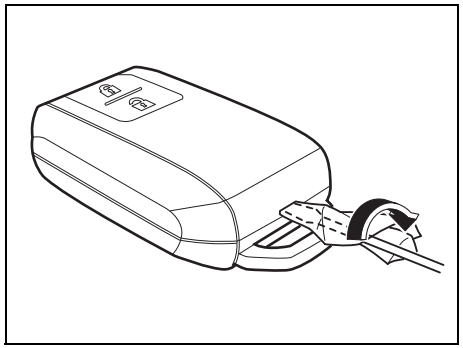

52RM20650

1) Insert a flat blade screwdriver covered with a soft cloth in the slot of the remote controller and pry it open.

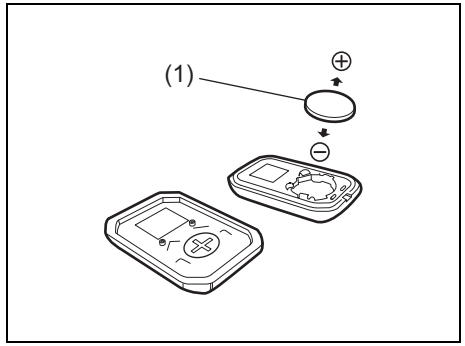

56RH00214

(1) Button type lithium battery: CR2032 or equivalent

2) Replace the battery (1) so its + terminal faces the bottom of the case as shown in the illustration.
3) Close the remote controller case firmly.
4) Make sure the door locks can be operated with the remote controller.
5) Dispose of the used battery properly according to applicable rules or regulations. Do not dispose of lithium batteries as ordinary household trash.

⚠ WARNING

Swallowing a lithium battery may cause serious internal injury. Do not allow anyone to swallow a lithium battery. Keep lithium batteries away from children and pets. If swallowed, contact a physician immediately.

NOTICE

- **The remote controller is a sensitive electronic instrument. To avoid damaging it, do not expose it to dust or moisture or tamper with internal parts.**
- **When replacing the battery by yourself, the remote controller could be damaged affected by static electricity. Discharge the static electricity built up in your body by touching metal before replacing the battery.**

NOTE:
Used batteries must be disposed of properly according to applicable rules or regulations and must not be disposed of with ordinary household trash.

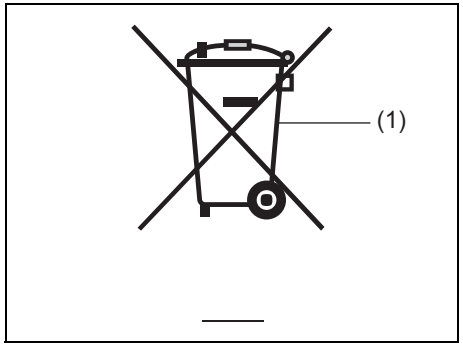

80JM133

(1) Crossed-out wheeled bin symbol

The crossed-out wheeled bin symbol (1) indicates that a used battery should be collected separately from ordinary household trash.

By ensuring the used battery is disposed of or recycled correctly, you will help prevent potential negative consequences for the environment and human health, which could otherwise be caused by inappropriate battery disposal. The recycling of materials will help to conserve natural resources. For more detailed information about disposing of or recycling the used battery, consult a SUZUKI dealer or a qualified workshop.

Theft Deterrent Alarm System (if equipped)

A theft deterrent alarm system is armed in about 20 seconds after you lock the doors.
Keyless entry system – Use the transmitter.
Keyless push start system – Use the remote controller or push the request switch on driver's door handle, front passenger's door handle or tailgate.
Once the system is armed, any attempt to open a door by using any other means (*) than the keyless push start system remote controller, the request switch or the keyless entry system transmitter will cause the alarm to be triggered.
* These means include the following:
  – The key
  – The lock knob on a door
  – The power door locking switch

NOTE:
- *The theft deterrent alarm system generates alarms when any of the predetermined conditions is met. However, the system does not have any function of blocking unauthorized entry into your vehicle.*
- *Always use the keyless push start system remote controller, the request switch or the keyless entry system transmitter to unlock the doors when the theft deterrent alarm system has been armed. Using a key instead will trigger the alarm.*
- *If a person who does not know the theft deterrent alarm system is going to drive your vehicle, we recommend you explain the system and its operation to the person, or disable the system beforehand. Mistakenly triggering the alarm may cause a nuisance to others.*
- *Even if the theft deterrent alarm system is armed, you should still be careful to guard against theft. Do not leave money or things of value in your vehicle.*

NOTICE
Do not modify or remove the theft deterrent alarm system. **If modified or removed, the system cannot be properly operated.**

The theft deterrent alarm system is maintenance-free.

How to arm the theft deterrent alarm system (when enabled)
Lock all doors (including the tailgate) using the keyless push start system remote controller, the request switch or the keyless entry system transmitter. The theft deterrent light (1) will start blinking, and the theft deterrent alarm system will be armed in about 20 seconds.
While the system is being armed, the indicator continues to blink at intervals of approximately 2 seconds.

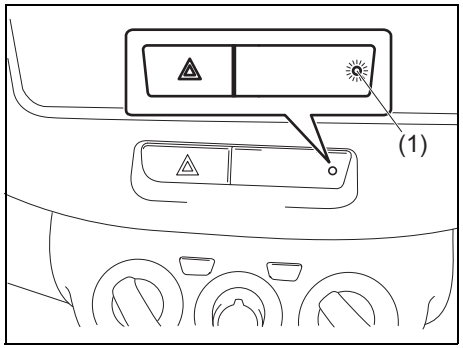

73R0025

NOTE:
- *To prevent the alarm from being accidentally triggered, avoid arming it while anyone remains inside the vehicle. The alarm will be triggered if any person inside unlocks a door by operating the lock lever or power door locking switch.*
- *The theft deterrent alarm system is not armed when all doors are locked using the key from outside, or using the door lock levers or the power door locking switch from inside.*
- *If any door is not operated within approximately 30 seconds after the doors have been unlocked using the keyless push start system remote controller, the request switch or the keyless entry system transmitter, the doors are automatically locked again. After the doors are locked, the theft deterrent alarm system will be armed in about 20 seconds if the system is in the enabled state.*

How to disarm the theft deterrent alarm system
Simply unlock the doors using the keyless push start system remote controller, the request switch or the keyless entry system transmitter. The theft deterrent light will go out, indicating that the theft deterrent alarm system is disarmed.

How to stop the alarm
Should the alarm be triggered accidentally, unlock the doors using the keyless push start system remote controller, the request switch or the keyless entry system transmitter, or press the engine switch to change the ignition mode to ON or turn the ignition switch to “ON” position. The alarm will then stop.

NOTE:
- *Even after the alarm has stopped, if you lock the doors using the keyless push start system remote controller, the request switch or the keyless entry system transmitter, the theft deterrent alarm system will be rearmed with a delay of about 20 seconds.*
- *If you disconnect the battery while the theft deterrent alarm system is in the armed condition or the alarm is actually in operation, the alarm will be triggered or re-triggered when the battery is then reconnected, although, in the latter case, the alarm remains stopped for the period between disconnection and reconnection of the battery.*
- *Even after the alarm has stopped at the end of the predetermined operation time, it will be triggered again if any door is opened without disarming the theft deterrent alarm system.*

Checking whether the alarm has been triggered during parking
If the alarm was triggered due to an unauthorized entry into the vehicle and you then press the engine switch to change the ignition mode to ON or turn the ignition switch to ON position, the theft deterrent light will blink rapidly for about 8 seconds and a buzzer will beep 4 times during this period. If this happens, check whether your vehicle has been broken into while you were away from it.

Enabling and disabling the theft deterrent alarm system
The theft deterrent alarm system can be either “enabled” or “disabled”.

When enabled (factory setting)
When the system is enabled, it causes the hazard warning lights to flash for about 40 seconds if any of the alarm trigger conditions is met. The system also causes the interior buzzer to beep intermittently for about 10 seconds, which is followed by intermittent sounding of the horn for about 30 seconds.
The theft deterrent light continues to blink during this time.

When disabled
When the system is disabled, it stays disarmed even if you perform any system arming operation.

How to switch the state of the theft deterrent alarm system
You can switch the theft deterrent alarm system from the enabled state to the disabled state, and vice versa, using the following method.

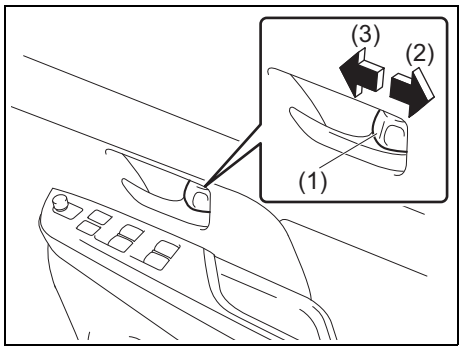

73R0026

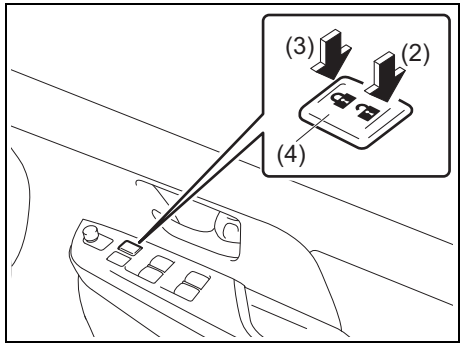

73R0027

(2) UNLOCK
(3) LOCK

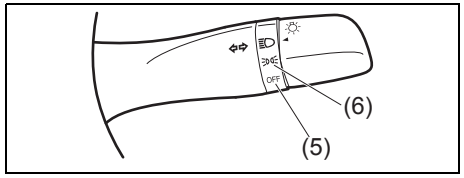

86T0102

1) Close all the doors and turn the lock knob (1) on the driver's door in the unlocking direction (2) (rearward). Turn the knob on the lighting control lever to the "OFF" position (5).

NOTE:
All operations included in the following steps 2) and 3) must be completed within 15 seconds.

2) Turn the knob on the lighting control lever to the position (6) and then to the "OFF" position (5). Repeat this operation 4 times with the control lever finally set to the "OFF" position.
3) Push the lock end (3) (forward end) of the power door lock switch (4) to lock the doors, and then the unlock end (2) (backward end) to unlock the doors. Repeat these operations 3 times and finally push the lock end of the switch.

Every time you perform the series of the above steps, the state of the theft deterrent alarm system changes from the currently selected one to the other. You can check whether the system is enabled or disabled by the number of interior buzzer beeps at the end of the procedure as follows.

System state	Number of beeps
Disabled	Once
Enabled	4 times

NOTE:
- *You cannot disable the theft deterrent alarm system while it is in the armed condition.*
- *If you fail to complete the operations in step 2) and 3) within 15 seconds, perform the procedure again from the beginning.*
- *Make sure all doors are closed when performing the above procedure.*

NOTE:
For vehicles with the keyless push start system, you can also switch the security system from the enabled state to the disabled state, and vice versa, via the setting mode of the information display. For details on how to use the information display, refer to "Information Display" in this section.

Theft Deterrent Light (if equipped)

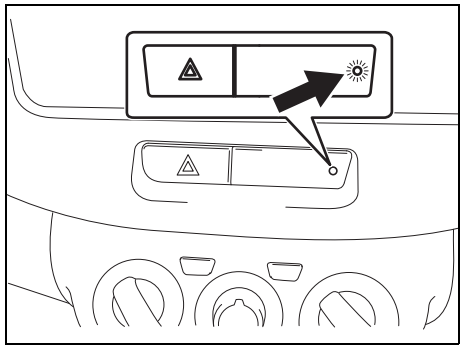

73R0178

This light will blink with the ignition switch in LOCK or ACC position, or the ignition mode “LOCK” (OFF) or “ACC”. The blinking light is intended to deter theft by leading others to believe that the vehicle is equipped with a security system.

NOTE:
For the theft deterrent alarm system, refer to “Theft deterrent alarm system (if equipped)” in this section.

Windows

Power Window Controls

The power windows can only be operated when the ignition switch is in the ON position.

Driver’s side

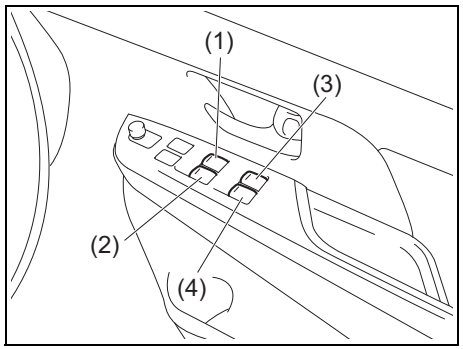

73R0004

The driver’s door has a switch (1) to operate the driver’s window, and a switch (2) to operate the front passenger’s window or there are switches (3), (4), to operate the rear right and left passenger windows, respectively.

Passenger’s door / rear door

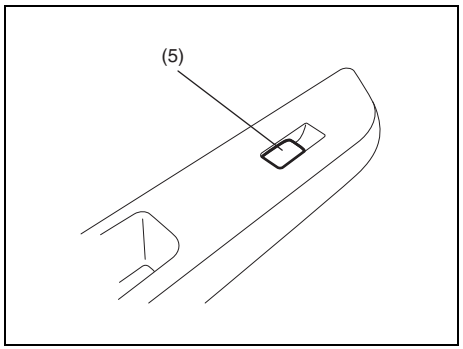

74LHT0205

The passenger’s door has a switch (5) to operate the passenger’s window.

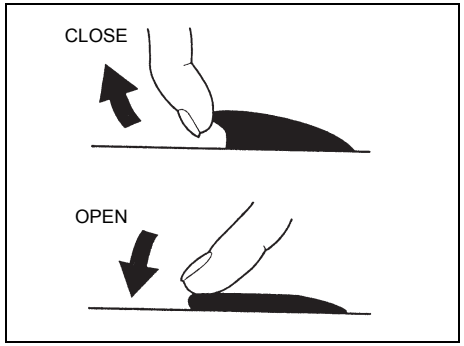

81A009

To open a window, push the top part of the switch and to close the window lift up the top part of the switch.
The driver's window has AUTO-DOWN and AUTO-UP features for added convenience (at tall booths or drive-through restaurants, for example). This means the driver can open or close the window without holding the window switch in DOWN or UP position. Press down or lift up the driver's window switch completely and release it. To stop the window before it reaches FULL-DOWN or FULL-UP position, pull up or push down the switch briefly.

Lock switch

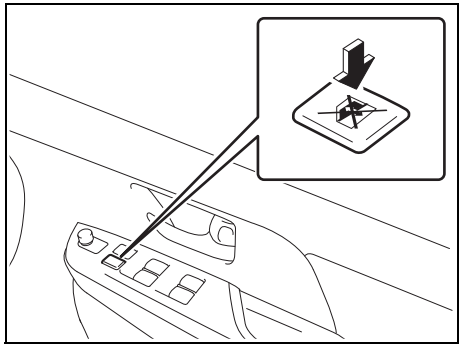

73R0005

The driver's door also has a lock switch for the passenger's windows. When you push in the lock switch, the passenger's windows cannot be raised or lowered by operating any of the switches (2), (3), (4) or (5). To restore normal operation, release the lock switch by pushing again.

⚠ WARNING

- **You should always lock the passenger's window operation when there are children in the vehicle. Children can be seriously injured if they get part of their body caught by the window during operation.**
- **To avoid injuring an occupant by window entrapment, check that no part of the occupant's body such as hands or head is in the path of the power windows when closing them.**
- **Always remove the ignition key or take the keyless push start system remote controller with you when leaving the vehicle even only for a short time. Also do not leave children alone in a parked vehicle. Unattended children could use the power window switches and get trapped by the window.**

NOTE:
If you drive with one of the rear windows open, you may hear a loud sound caused by air vibration. To reduce the sound, open the driver's or front passenger's window, or narrow the rear window opening.

Pinching Prevention Function

The driver's window is equipped with a pinching prevention function. This function detects a foreign object that is caught in the window as it is being closed by AUTO-UP feature, which allows you to close the window without holding the window switch in UP position, and stops the window from closing to prevent damage.

⚠ WARNING

To avoid injuring an occupant by window entrapment, check that no part of the occupant's body such as hands or head is in the path of the electric window when closing it.
This function may not detect an object due to the size, hardness, or position of the object being caught in the closing window.

⚠ CAUTION

- **The pinching prevention function does not operate while you are holding the window switch in UP position.**
- **The pinching prevention function may not detect an object caught in the window just before the window is fully closed.**

NOTE:
Even if you cannot close the window by the AUTO-UP feature because there may be something wrong with the pinching prevention function, you can close the window by holding the window switch in UP position.
If you drive in extreme off-road condition, the pinching prevention function may operate accidentally because the window reacts to vehicle jolting.

Pinching prevention function initialization
When you disconnect and reconnect the lead-acid battery or replace the fuse, the function will be deactivated. In this condition, the AUTO-DOWN feature will be deactivated, while the AUTO-UP feature may remain activated. The pinching prevention function needs to be initialized.

To initialize the pinching prevention function, use the following procedure:
1) Turn the ignition switch to "ON" position or press the engine switch to change the ignition mode to ON.
2) Open the driver's window fully by holding the window switch in DOWN position.
3) Close the driver's window by holding the switch in UP position, and keep holding the switch for 2 seconds after the window is fully closed.
4) Check the driver's window to see if the AUTO-DOWN/UP feature works.

⚠ WARNING

Whenever you disconnect and reconnect the lead-acid battery or replace the fuse, the pinching prevention function needs to be initialized.
The pinching prevention function will not be activated until the initialization is completed.

If the AUTO-DOWN/UP feature will not work after initialization, there might be something wrong with the pinching prevention function. Have your vehicle inspected by an authorized SUZUKI dealer.

Mirrors

Inside Rearview Mirror

You can adjust the inside rearview mirror by hand to see the rear of your vehicle in the mirror.

Type A

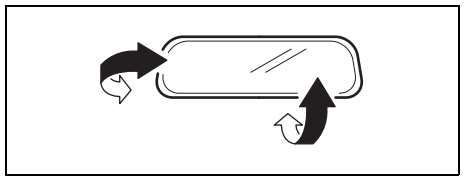

74LHT0235

Type B

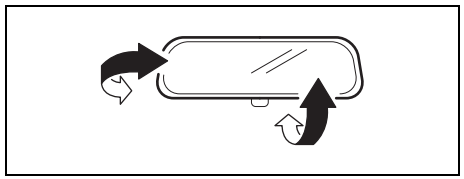

68LMT0205

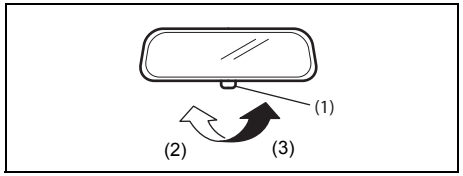

68LMT0206

(2) Day driving
(3) Night driving

To adjust the mirror, set the selector tab (1) to the day position, and then move the mirror up, down or sideways by hand to obtain the best view.
When driving at night, you can move the selector tab to the night position to reduce glare from the headlights of vehicles behind you.

⚠ WARNING

- **Always adjust the mirror with the selector set to the day position.**
- **Only use the night position if it is necessary to reduce glare from the headlights of vehicles behind you. Be aware that in this position you may not be able to see some objects that could be seen in the day position.**

Outside Rearview Mirrors

Adjust the outside rearview mirrors so you can just see the side of your vehicle in the mirrors.

⚠ WARNING

Be careful when judging the size or distance of a vehicle or other object seen in the side convex mirror. Be aware that objects look smaller and appear farther away than when seen in a flat mirror.

Type 1

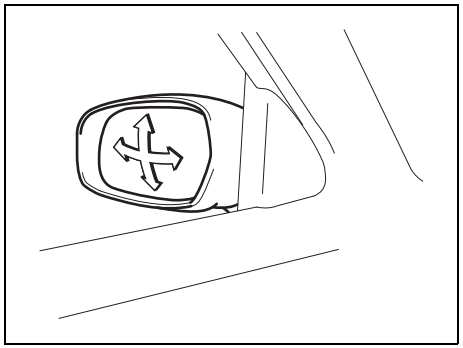

73R0029

Adjust the outside rearview mirrors so you can just see the side of your vehicle in the mirrors.

Type 2

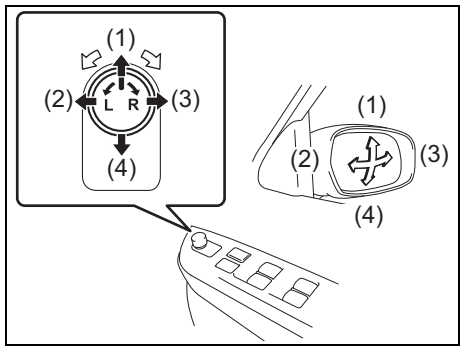

73R0030

The switch to control the electric mirrors is located on the driver's door panel. You can adjust the mirrors when the ignition switch is in "ACC" or "ON" position, or the ignition mode is "ACC" or "ON". To adjust the mirrors:

1) Rotate the selector switch to the left or right to select the mirror you wish to adjust.
2) Push the side of the switch to the direction in which you wish to move the mirror.
3) Return the selector switch to the center position to prevent unintended mirror movement.

Outside Rearview Mirrors Folding Switch (if equipped)

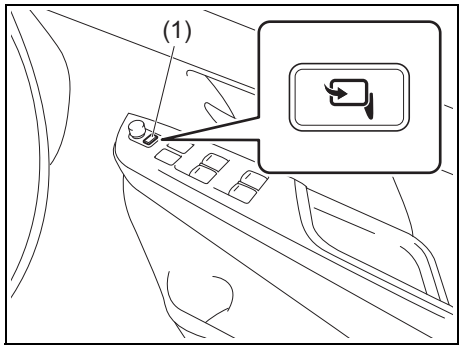

73R0031

You can fold the mirrors when you park the vehicle in a narrow space. When the ignition switch is in the ACC or ON position, or the ignition mode is "ACC" or "ON", push the folding switch (1) to fold and unfold the mirrors.
Make sure the mirrors are completely unfolded before you start driving.

⚠ CAUTION

Moving mirrors can pinch and injure a hand. Do not allow any one's hand to get near the mirrors when folding and unfolding the mirrors.

Remote Folding Mirrors (if equipped)

When the outside rearview mirror folding switch is in the unfolded position, the outside rearview mirrors are folded or unfolded in conjunction with the door locking or engine switch operation.

- When you lock the doors (including the tailgate) by using the remote controller or pushing the request switch, the mirrors will be folded automatically.
- To unfold the mirrors, push the engine switch to change the ignition mode to ACC or ON.
- The factory setting is that the function is enabled. You can switch the function from the enabled state to the disabled state, and vice versa. To switch the function for your preference, refer to "How to switch the remote folding mirror function".

NOTICE

In a cold winter such as the mirrors are frozen, disable the function. If the mirrors are folded and unfolded repeatedly without thawing, the mirrors may be damaged.

NOTE:
- *If the doors are locked by using the key, lock knob on a door or power door locking switch, the mirrors will not be folded automatically.*
- *If the outside rearview mirror folding switch is in the folded position, the mirrors will not be unfolded automatically, even when the engine switch is pushed to change the ignition mode to ACC or ON.*
- *If any of the doors is not opened within about 30 seconds after the doors are unlocked by using the keyless push start system remote controller or request switch, the doors will be locked again and the mirrors will be folded automatically.*

How to switch the remote folding mirror function

When the ignition mode is LOCK (OFF), you can switch the function from the enabled state to the disabled state, and vice versa, using the following method.

1) Sit in the driver's seat and make sure that all doors are closed.
   - If any door is open, the open door warning light comes on.

EXAMPLE

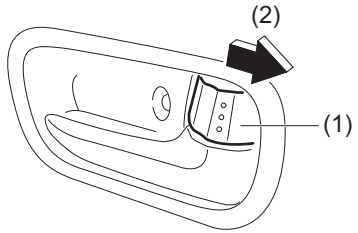

75RM263

2) Turn the lock knob (1) on the driver's door rearward (2).

NOTE:
All operations included in the following steps 3) and 4) must be completed within 15 seconds.

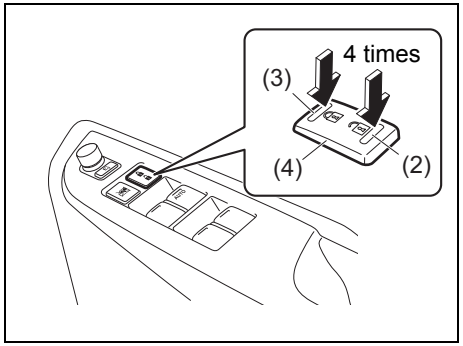

75RM264

3) Push the lock end (3) (forward end) of the power door lock switch (4) to lock the doors, and then the unlock end (2) (backward end) to unlock the doors. Repeat these operations 4 times and finally push the lock end of the switch.

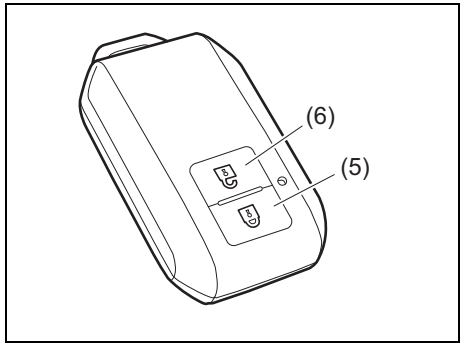

73SB005

(5) LOCK button
(6) UNLOCK button

4) Push any of the buttons on the keyless push start system remote controller 3 times.
   • Push either LOCK button or UNLOCK button described above you like.
   • During operation, the doors are not locked or unlocked.

Every time you perform the series of the above steps, the state of the remote folding mirror function changes from the currently selected one to the other. You can check whether the system is enabled or disabled by the number of interior buzzer beeps at the end of the procedure as follows.

System state	Number of beeps
Disabled	Once
⇕	⇕
Enabled	Twice

• If you cannot complete the operations in step 3) and 4) within 15 seconds correctly, the state of the remote folding mirror function will not change and the interior buzzer does not beep. Perform the procedure again from the beginning.

Instrument Cluster

1. Speedometer
2. Tachometer
3. Fuel gauge
4. Temperature gauge
5. Information display
6. Trip meter selector knob
7. Indicator selector knob
8. Warning and indicator lights

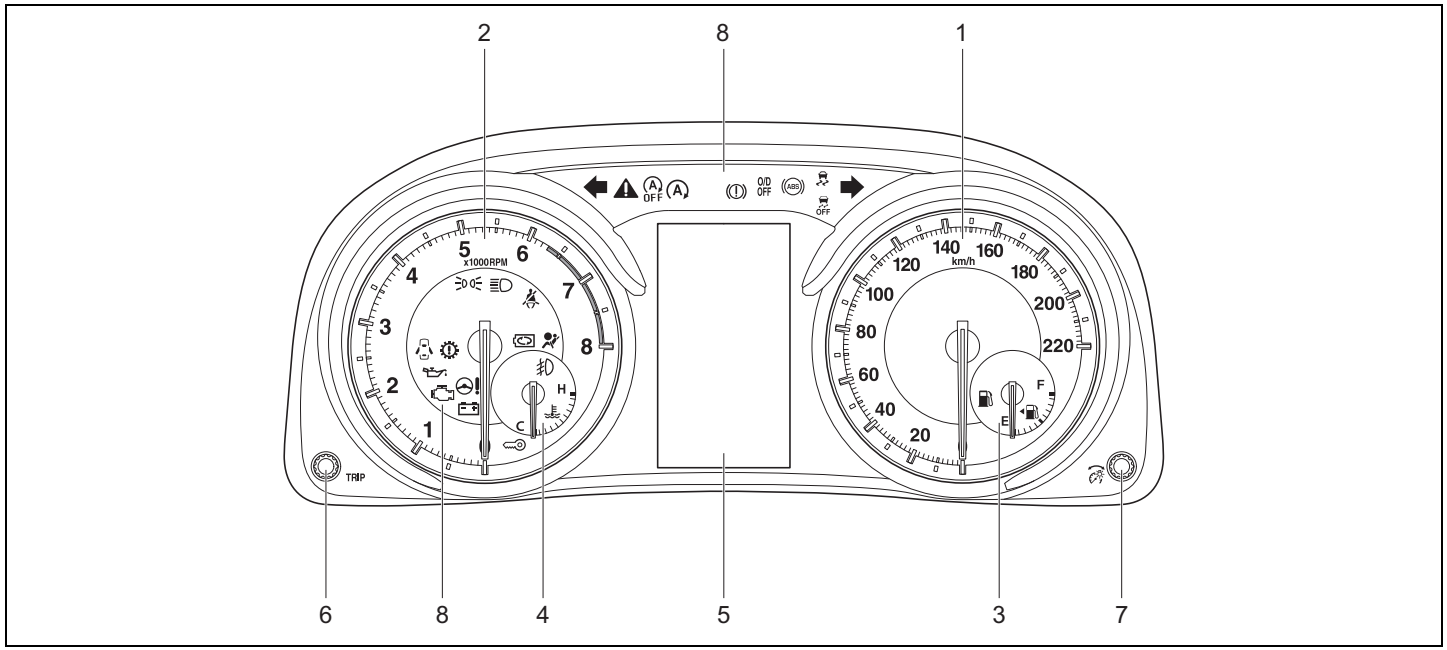

86T0004

Speedometer

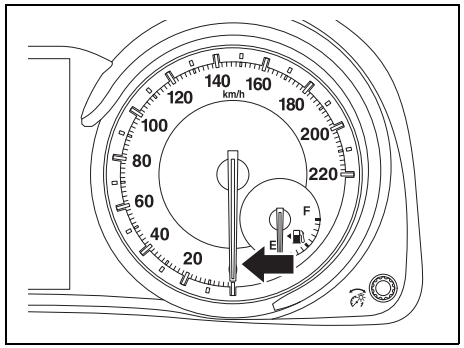

72R0056

The speedometer indicates vehicle speed.

Tachometer

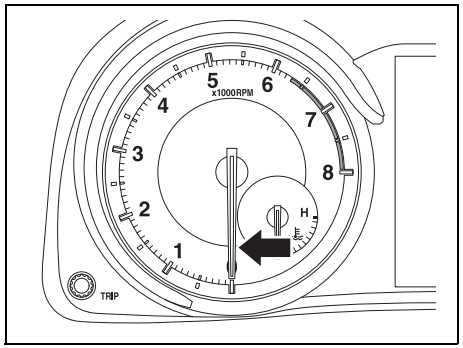

72R0057

The tachometer indicates engine speed in revolutions per minute.

NOTICE

Never drive the vehicle with the engine revving in the red zone or severe engine damage can result.
Keep the engine speed below the red zone even when downshifting to a lower gear position.
Refer to "Downshifting maximum allowable speeds" in the "OPERATING YOUR VEHICLE" section.

Fuel gauge

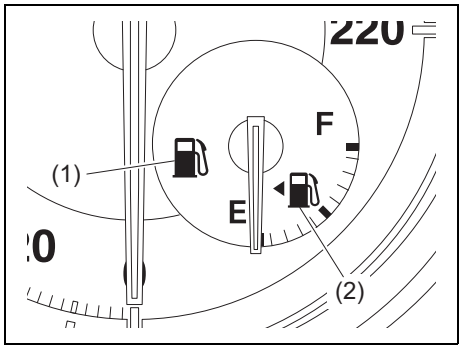

72R0058

When the ignition switch is in "ON" position or the ignition mode is "ON", this gauge gives a rough indication of the amount of fuel in the fuel tank. "F" stands for full and "E" stands for empty.

If the indicator approaches a low level (near "E") on fuel gauge, refill the tank as soon as possible.

NOTE:
The indicator moves a little depending on road conditions (for example, slope or curve) and driving conditions because of fuel moving in the tank.

If the low fuel warning light (1) comes on, refill the fuel tank as soon as possible.

NOTE:
The activation point of the low fuel warning light (1) varies depending on road conditions (for example, slope or curve) and driving conditions because of fuel movement in the tank.

Refer to “Low fuel warning light” in “Warning and indicator lights” in this section for details.

The mark (2) indicates that the fuel filler door is located on the left side of the vehicle.

Temperature Gauge

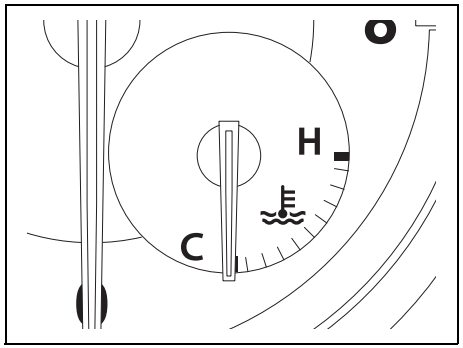

72R0059

When the ignition switch is in “ON” position or the ignition mode is “ON”, this gauge indicates the engine coolant temperature. Under normal driving conditions, the indicator should stay within the normal, acceptable temperature range between “H” and “C”. If the indicator approaches “H”, overheating is indicated. Follow the instructions for engine overheating in “EMERGENCY SERVICE” section.

NOTICE
Continuing to drive the vehicle when engine overheating is indicated can result in severe engine damage.

Brightness Control

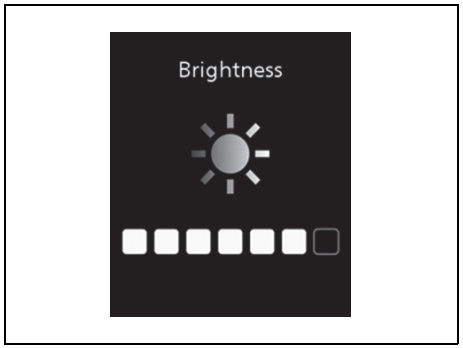

72R0063

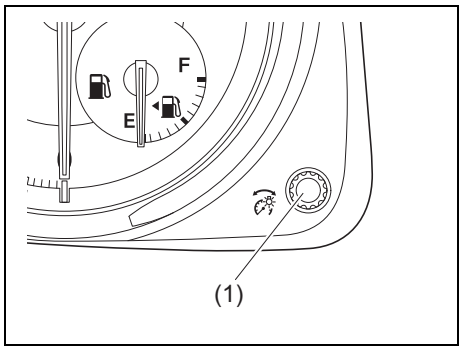

72R0060

When the ignition switch is turned “ON” or pushed to “ON” mode, the instrument panel lights come on.

Your vehicle has a system to automatically dim the brightness of the instrument panel lights when the position lights or headlights are on.

You can adjust the meter illumination brightness regardless of whether the position lights or headlights are off or on.

To increase the brightness of the instrument panel lights, turn the brightness control knob (1) clockwise.

To reduce the brightness of the instrument panel lights, turn the brightness control knob (1) counterclockwise.

⚠ WARNING

Do not adjust the brightness of the instrument panel lights while driving. Otherwise, you could lose control of the vehicle.

NOTE:
- *If you do not turn the brightness control knob within several seconds of activating, the brightness control display will be canceled automatically.*
- *When you reconnect the lead-acid battery, the brightness of the instrument panel lights will be reinitialized. Readjust the brightness according to your preference.*

NOTE:
If you adjust to the maximum brightness level when the position lights or headlights are on, the following functions will be cancelled.
- *The function which automatically dims the brightness of instrument panel lights.*
- *The function which operates with the brightness control, except maximum brightness level.*

Information Display

The information display is shown when the ignition switch is in “ON” position or the ignition mode is “ON”.

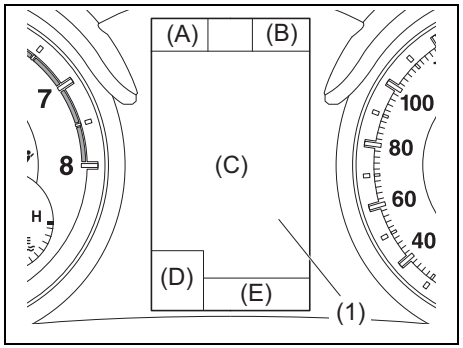

86T0011

(1) Information display

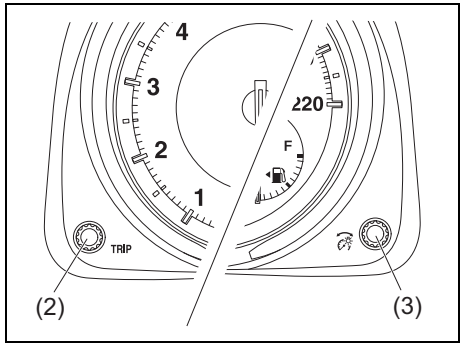

72R0062

(2) Trip meter selector knob
(3) Indicator selector knob

The information display shows the following information.

Display (A)
Clock

Display (B)
Thermometer

Display (C)
Fuel consumption / Driving range / Average speed / Driving time / Clock and date / Motion / Torque and power / Accelerator and brake / Energy flow / Total idling stop time and Total idling fuel saved

Display (D)
Selector position (for automatic transmission vehicles) / Gearshift indicator (for manual transmission vehicles)

Display (E)
Trip meter / Odometer



72R0135

When the ignition switch is turned “ON” or pushed to “ON” mode, the message shown in the above illustration will appear on the display for several seconds.

Some warning and indicator messages may appear on the display when the ignition switch is in “ACC” or “LOCK” position, or the ignition mode is “ACC” or “LOCK” (OFF).

Clock

When the ignition switch is in “ON” position or the ignition mode is “ON”, the display (A) shows the time.

To set the clock, follow “Setting mode” instructions in this section.

⚠ WARNING

If you attempt to adjust the display while driving, you could lose control of the vehicle.
Do not attempt to adjust the display while driving.

Thermometer

When the ignition switch is in “ON” position or the ignition mode is “ON”, the display (B) shows the thermometer.

The thermometer indicates the outside temperature.



52RM21050

If the outside temperature nears freezing condition, the message shown in the above illustration will appear on the display.

NOTE:

- *The outside temperature indication is not the actual outside temperature when driving at low speed, or when stopped.*
- *If there is something wrong with the thermometer, or just after the ignition switch is turned “ON” or pushed to “ON” mode, the display may not indicate the outside temperature.*

You can change the unit of temperature. To change the unit of temperature, refer to “Setting mode” in this section.

Fuel Consumption / Driving Range / Average Speed / Driving Time / Total Idling Stop Time and Total Idling Fuel Saved / Clock and Date / Motion / Torque and Power / Accelerator and Brake / Energy flow

When there are no warning or indicator messages on the display (C), you can select one of the following indications to appear on the display: instantaneous fuel consumption, average fuel consumption, driving range, average speed, driving time, total idling stop time and total idling fuel saved, clock and date, motion, torque and power, accelerator and brake, energy flow or no indication.

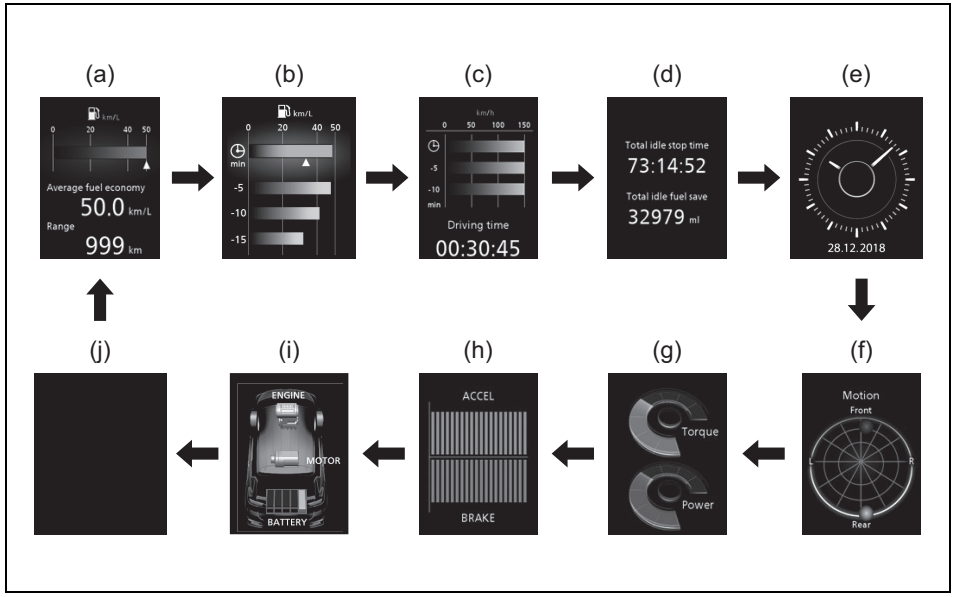

72R0064

(a) Instantaneous fuel consumption / Average fuel consumption / Driving range
(b) Instantaneous fuel consumption / Average fuel consumption / 5-minute average fuel consumption
(c) Average speed / 5-minute average speed / Driving time
(d) Total idling stop time / Total idling fuel saved
(e) Clock and date
(f) Motion
(g) Torque and power
(h) Accelerator and brake
(i) Energy flow
(j) No indication

To switch the display indication, push the indicator selector knob (3) quickly.

NOTE:
The value of instantaneous fuel consumption, average fuel consumption, driving range, average speed, total idling fuel saved, motion, torque and power, accelerator and brake and energy flow shown on the display are affected by the following conditions;

- *road condition*
- *surrounding traffic condition*
- *driving condition*
- *vehicle condition*
- *a malfunction which causes the malfunction indicator light to come on or blink*

Instantaneous fuel consumption
The display shows instantaneous fuel consumption with a bar graph only when the vehicle is moving.

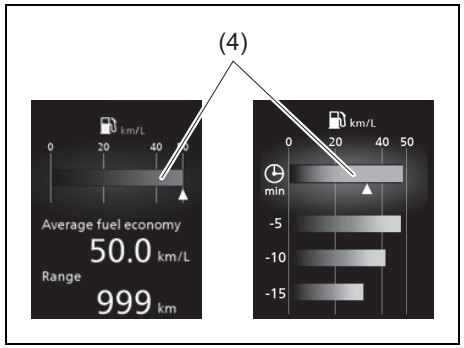

52RM21070

(4) Instantaneous fuel consumption

NOTE:
- *The display does not show the bar graph unless the vehicle is moving.*
- *Depending on the vehicle's specification, the fuel consumption units of initial setting are indicated as L/100km, km/L, MPG (UK).*
- *The indicated maximum value of instantaneous fuel consumption is one of the followings. No more than the maximum value will be indicated on the display even if the actual instantaneous fuel consumption is higher.*
  – For L/100km setting: 30
  – For km/L setting: 50
  – For MPG (UK) setting: 80
- *The indication on the display may be delayed if fuel consumption is greatly affected by driving conditions.*
- *The display shows estimated values. Indications may not be the same as actual values.*

Average fuel consumption / 5-minute average fuel consumption / 1-driving cycle average fuel consumption
Average fuel consumption from previous reset and 5-minute average fuel consumption, and 1-driving cycle average fuel consumption are shown.

(Average fuel consumption)

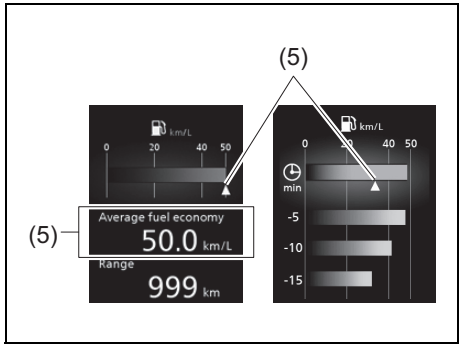

52RM21080

(5) Average fuel consumption

If you selected average fuel consumption the last time you drove the vehicle, the display shows the last value of average fuel consumption from previous driving when the ignition switch is turned "ON" or pushed to "ON" mode. Unless you reset the value of average fuel consumption, the display indicates the value of average fuel consumption based on the average fuel consumption during previous driving.

NOTE:
When you reconnect the negative (–) terminal to the lead-acid battery, the value of average fuel consumption will be shown after driving for a period of time.

You can select the timing to reset the value of average fuel consumption by one of the following three methods;
- Reset after refuel: the value of average fuel consumption will be reset automatically by refueling.
- Reset with trip meter A: the value of average fuel consumption will be reset automatically by resetting trip meter A.
- Reset manually: the value of average fuel consumption will be reset by pushing and holding the indicator selector knob (3) when the display indicates the average fuel consumption.

To change the timing to reset the value of average fuel consumption, refer to "Setting mode" in this section.

NOTE:
If you add only a small amount of fuel when you select "Reset after refuel", the average fuel consumption value may not be reset.

(5-minute average fuel consumption)

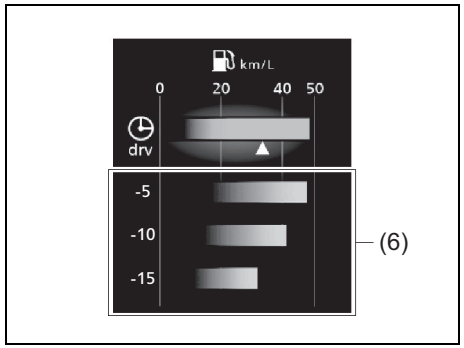

86T0012

(6) 5-minute average fuel consumption

(1-driving cycle average fuel consumption)

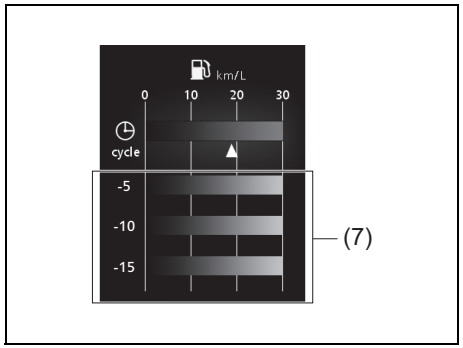

86T0013

(7) 1-driving cycle average fuel consumption

You can check transition of average fuel consumption every 5 minutes from 15 minutes before up to now. Also, you can check transition of average fuel consumption the past 3 driving cycles. Time indication and driving cycle indication can be changed. For details, refer to "Setting mode" in this section.

Driving range

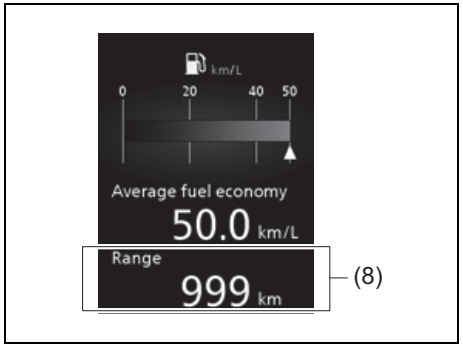

52RM21090

(8) Driving range

If you selected driving range the last time you drove the vehicle, the display indicates "---" for a few seconds and then indicates the current driving range when the ignition switch is turned "ON" or pushed to "ON" mode.

The driving range shown in the display is the approximate distance you can drive until the fuel gauge indicates "E", based on current driving conditions.

When the low fuel warning light comes on, the display "---" will appear. If the low fuel warning light comes on, fill the fuel tank immediately regardless of the value of driving range shown in the display.

When you refuel, the driving range is updated. However, if you only add a small

amount of fuel, the correct value will not be displayed.

NOTE:
- *If you refuel when the ignition switch is in "ON" position or the ignition mode is "ON", the driving range may not indicate the correct value.*
- *When you reconnect the negative (–) terminal to the lead-acid battery, the value of driving range will be shown after driving for a period of time.*

Average speed / 5-minute average speed

Average speed from previous reset and 5-minute average speed are shown.

(Average speed)

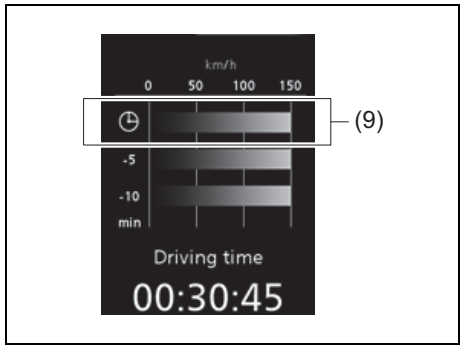

52RM21100

(9) Average speed

If you selected average speed the last time you drove the vehicle, the display indicates the last value of average speed from previous driving when the ignition switch is turned "ON" or pushed to "ON" mode. Unless you reset the value of average speed, the display indicates the value of average speed which includes average speed during previous driving.

To reset the value of average speed, push and hold the indicator selector knob (3) for about 2 seconds when the display indicates an average speed. The display shows "---" and then indicates a new average speed after driving for a short time.

NOTE:
When you reconnect the negative (–) terminal to the lead-acid battery, the value of average speed will be shown after driving for a period of time.

(5-minute average speed)

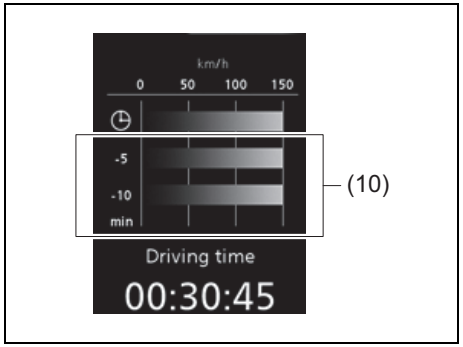

52RM21110

(10) 5-minute average speed

You can check transition of 5-minute average speed every 5 minutes from 10 minutes before up to now.

Driving time

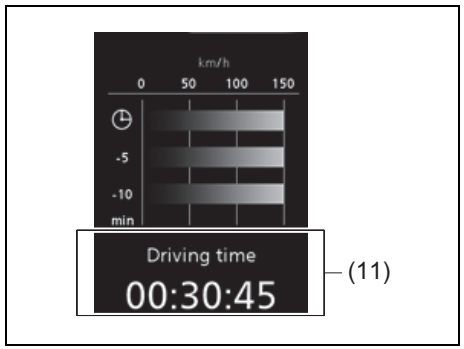

52RM21120

(11) Driving time

Driving time from previous reset is shown. To reset the driving time, push and hold the indicator selector knob (3) for about 2 seconds when the display indicates a driving time. The display shows "---" and then indicates a new driving time after driving for a short time.

NOTE:

- *Disconnection of the lead-acid battery negative (-) terminal will reset the indication of the driving time.*
- *The indicated maximum value of driving time is 99:59:59. No more than this value will be indicated on the display until you reset the driving time.*

Total idling stop time and total idling fuel saved

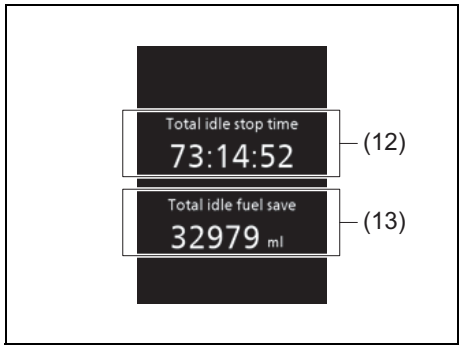

52RM217

(12) Total idling stop time
(13) Total idling fuel saved

The display shows the total length (in hours, minutes and seconds) of engine stopping time and the total amount (in milliliters) of fuel conservation by ENG A-STOP system since the indication was reset.

- To reset the total idling stop time and the total idling fuel saved, push and hold the indicator selector knob (3) for a while when the display shows the total idling stop time and the total idling fuel saved.

NOTE:

- *The indicated maximum value of the total idling stop time is 99:59:59 and this value is fixed until it is reset.*
- *When you reconnect the negative (–) terminal to the lead-acid battery, the value of the total idling stop time and the total idling fuel saved will be reset.*

Clock and date

Date and time are shown. For the setting procedure, refer to "Setting mode" in this section.

Motion

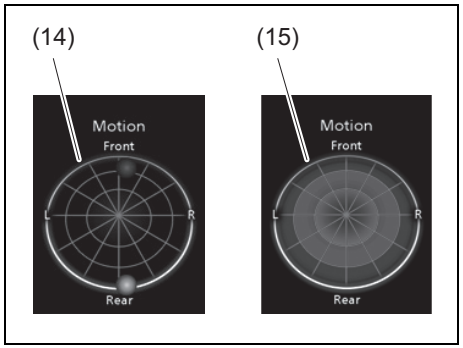

52RM218

The meter indication is different depending on whether the vehicle is stopped or running.

When driving, real time movement of imaginal G position (center of gravity) is displayed on the globe (14), which is resultant with inertia force.

When stopped, historical data of imaginal G positions applied to the vehicle body during the driving is shown as a graph (15).

G position history graph when the vehicle stopped can be changed to indicate or hide. For details, refer to “Setting mode” in this section.

⚠ WARNING

Do not look in the display intensively while driving. Doing so may result in an accident.

NOTE:

- *If G position history graph at the vehicle stopped has been set in indication mode, the graph (15) is shown for several seconds when you turn the ignition switch to “LOCK” position or change the ignition mode to “LOCK” (OFF) after driving.*
- *The graph is shown approximately and the actual movement may differ.*

Torque and power

Present engine torque and power are shown.

Accelerator and brake

Present accelerator pedal depressing degree and brake line pressure are shown. The display is selectable to indicate or not to indicate. For details, refer to “Setting mode” in this section.

Energy flow

The state of Smart Hybrid operation can be checked on the information display. For details, refer to “Smart Hybrid” in “OPERATING YOUR VEHICLE” section.

Information display	Description
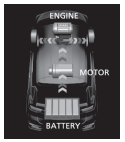 72R0138	When the vehicle is running, ISG (Integrated Starter Generator) assists engine power as an electric motor.
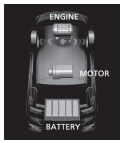 72R0139	When the vehicle is powered by the engine.
 72R0140	When decelerating your vehicle, the ISG generates electricity without engine power.
 72R0141	When the engine automatically stops by the ENG A-STOP system.

Information shown after driving
When you turn the ignition switch to LOCK position or press the engine switch to change the ignition mode to “LOCK” (OFF), the following information appears for several seconds on the information display.

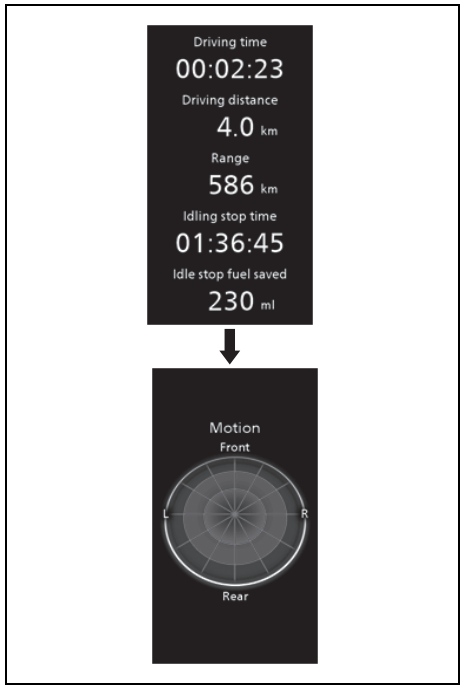

52RM21140

Intersection Guidance (When using Android AutoTM*1 or Apple CarPlay*2 on infotainment system)) (if equipped)



59RN04710

The display shows the direction of your driving and the distance, working with the infotainment system.

NOTE:
- *A slight time lag may occur between the intersection guidance on the information display and the guidance from the infotainment system.*
- *Switch the intersection guidance to ON or OFF while the guidance from the infotainment system is displayed.*
  – *A time lag may occur between ON display and OFF display of the intersection guidance.*
  – *For the functions and operations of the infotainment system, refer to the supplementary manual, provided along with it.*
- *You can display or hide the intersection guidance by changing the setting (customization).*
  For details, refer to “Setting Mode” in this section.

*1: Android AutoTM may not be available in your country or region.
For details about Android AutoTM, refer to http://support.google.com/androidauto

*2: Apple CarPlay may not be available in your country or region.
For details about Apple CarPlay, refer to https://www.apple.com/ios/carplay/

Selector Position (for automatic transmission vehicles) / Gearshift Indicator (for manual transmission vehicles)

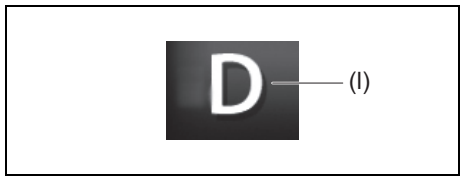

52RM242

Selector position (for automatic transmission vehicles)
When the ignition switch is turned to ON position or the engine switch is pressed to change the ignition mode to “ON”, the display (D) indicates the gear position (I).

For details on how to use the transmission, refer to “Using transmission” in “OPERATING YOUR VEHICLE” section.

Gearshift Indicator (for manual transmission vehicles)
Refer to “Gearshift indicator” in “OPERATING YOUR VEHICLE” section.

Trip Meter / Odometer

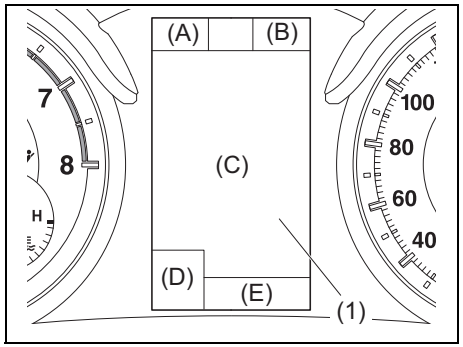

86T0011

The display (E) shows the trip meter or the odometer. You can switch with the Trip meter selector knob.

The display (E) shows the trip meter.

The trip meter can be used to measure the distance traveled on short trips or between fuel stops.
You can use trip meter A or trip meter B independently.

To reset the trip meter, push and hold the trip meter selector knob (2) for about 2 seconds when the display shows the trip meter.

The display (E) shows the odometer.

The odometer records the total distance the vehicle has been driven.

NOTICE

Keep track of your odometer reading and check the maintenance schedule regularly for required services. Increased wear or damage to certain parts can result from failure to perform required services at the proper mileage intervals.

Setting Mode

When the ignition switch is in “ON” position or the ignition mode is “ON” and the vehicle is stationary, you can enter into the setting mode of the information display by pushing and holding the indicator selector knob (3) for more than 3 seconds.

- To select the setting item that you want to change, turn the indicator selector knob (3) left or right.
- To change the setting, push the indicator selector knob (3).
- To exit the setting mode, select “Back” and push the indicator selector knob (3).



72R0142

NOTE:
The currently selected setting item is surrounded by a frame.

NOTE:
- *If you push and hold the indicator selector knob (3) to enter into the setting mode when the display (C) shows average fuel consumption, average speed, driving time, total idling stop time and total idling fuel saved, the value will be reset simultaneously. If you do not want to reset the value, push the indicator selector knob quickly to switch the indication of the display.*
- *If you turn the ignition switch, press the engine switch or start to move the vehicle when the display is in the setting mode, the setting mode will be canceled automatically.*

Distance unit
(Odometer / trip meter / driving range / average speed distance unit setting)
You can change the units in which odometer / trip meter / driving range / average speed distance is displayed.

Fuel economy
(Fuel consumption unit setting)
You can change the units that fuel consumption is displayed in.

Language
You can change the language of the information display.

Fuel reset
(Average fuel consumption reset setting)
You can change when the value of average fuel consumption is reset.

Temperature
(Temperature unit setting) (if equipped)
You can change the units that temperature is displayed in.
- To change the temperature unit, select “Temperature” in “Setting mode”. Then, select “°C” or “°F”.

NOTE:
When you change the units that temperature is displayed in, the automatic heating and air conditioning system (if equipped) temperature display units will be changed automatically.

Set sensors
(Parking sensor setting) (if equipped)
The parking sensor can be switched between the normal mode and trailer mode. Refer to “Parking sensors” in “OPERATING YOUR VEHICLE” section.

Clock setting
(Adjusting the clock) (if equipped)
- Adjust the clock by selecting “Clock setting” in “Setting mode”. Then, select “Adjust clock”.
- To change the hour indication, turn the indicator selector knob (3) left or right repeatedly when the hour indication blinks. To change the hour indication quickly, turn and hold the indicator selector knob (3). To set the hour indication, push the indicator selector knob (3) and the minute indication blinks.
- To change the minute indication, turn the indicator selector knob (3) left or right repeatedly when the minute indication blinks. To change the minute indication quickly, turn and hold the indicator selector knob (3). To set the minute indication, push the indicator selector knob (3).

(Selecting 12H/24H format)
- Switch the time indication between 12-hour and 24-hour format by selecting “Clock setting” in “Setting mode”. Then, select “12H” or “24H”.

(Adjusting the date)
- Adjust the date by selecting “Clock setting” in “Setting mode”. Then select “Adjust date”.
- To adjust year, month and day, operate the indicator selector knob (3) in the same way as adjusting the clock.

Door lock
(Door lock setting) (if equipped)
(Door unlock)
- All Doors:
  Unlock all doors by turning the key, or operating the keyless entry system transmitter, keyless push start system remote controller or request switch once.
- Driver Door:
  Unlock all doors by turning the key, or operating the keyless entry system transmitter, keyless push start system remote controller or request switch twice (default setting).

(Alarm)
- You can turn off or on the buzzer sound when the door(s) is(are) locked or unlocked.

Lights
(Lane change setting)
The turn signal and its indicator can be set whether they flash three times even if you return the turn signal control lever immediately after moving it.

Guide me light setting (Light setting)
(if equipped)
You can change the lighting time of “To car” function or “To home” function.

Antitheft (Theft deterrent alarm system setting) (if equipped)
You can switch the theft deterrent alarm system from the enabled state to the disabled state, and vice versa. The state of the theft deterrent alarm system is shown on the information display as follows:
- Mode A: Disabled state
- Mode D: Enabled state

NOTE:
For the theft deterrent alarm system, refer to “Theft deterrent alarm system (if equipped)” in this section.

IS A/C
(ENG A-STOP system setting)
- When the automatic air conditioning system is turned ON, you can select one of the following engine auto stop settings.
  – Standard
  – Economy
  – Comfort
- When “Economy” is selected, compared with “Standard” the engine auto stop condition will occur more frequently, the stop time will be longer, leading to reduction of fuel consumption.
- When “Comfort” is selected, compared with “Standard” the engine auto stop condition will occur less frequently, the stop time will be shorter, leading to more comfortable cabin condition by the air conditioning system.

Display item
(“Car color” setting)
You can change the car color of the information display.

(“Calendar dis” setting)
You can select whether you show the calender on the information display or not.

(“Calendar form” setting)
You can change the calendar form of the information display.
To change the calendar form, select “Calendar form” in “Display item”. Then, select the display order of date, month and year.

(“Fuel eco hist” setting)
Transitional indication of average fuel consumption can be switched to time indication and driving cycle indication.

(“Motion hist” setting)
Indication of G position history graph at the vehicle stopped can be selected to enable or disable.

(“Idling disp” setting)
Display of ENG A-STOP operation with the ignition switch in LOCK position or ignition mode “LOCK” (OFF) is selectable to indicate or not to indicate.

(“Idling warn” setting)
You can switch whether the information display shows the warning and indicator messages related on the ENG A-STOP system.

(“Intersection” setting) (if equipped)
Display of “Intersection” is selectable to indicate or not to indicate.

(“Pedal op disp” setting)
Display of “Accelerator and brake” is selectable to indicate or not to indicate.

(“Regen disp” setting)
You can choose that the deceleration energy regenerating indicator light comes on or does not come on.

Default
(initialization setting)
If you select “YES” and push the indicator selector knob (3), all settings will be reinitialized.

Warning and Indicator Messages

The display shows warning and indicator messages to let you know about certain vehicle problems.
A tone may also sound to alert you.

If warning and indicator messages appear on the display, follow the messages.

Master warning indicator light



80P0382

When the display shows warning and indicator messages, the master warning indicator light may also blink.

NOTE:
- *When the problem that causes a message to appear is corrected, the message will disappear.*
- *If a message is displayed, and other problems requiring a message occur, the message for each of the problems will be alternately displayed about every 5 seconds.*
- *When you push and hold the indicator selector knob (2) for about 2 seconds while a message is displayed, the message will disappear temporarily. If the problem that caused the message is not corrected, the message will appear again after 5 seconds.*

Warning and indicator messages

All model

Warning and indicator message	Master warning indicator light	Sound	Cause and remedy
 72R0069	Blinks (only while vehicle is in motion) 	Beep (one time from interior buzzer; only while vehicle is in motion)	A door or tailgate is not properly closed. Stop the vehicle in a safe place and close the door or tailgate properly. (#1)
 52RS005	Blinks 	Continuous beep (from interior buzzer)	The parking brake is not released. Stop the vehicle in a safe place and release the parking brake.

(#1) This message will disappear after a while even if the problem that caused the message to appear is not corrected.

Warning and indicator message	Master warning indicator light	Sound	Cause and remedy
 52RM21170	Blinks 	Continuous beep (from interior buzzer)	The headlights and/or the position lights are left on. Turn them off.
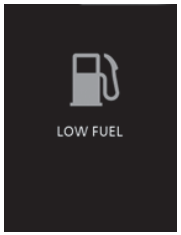 52RM21180	Off	Beep (one time from interior buzzer)	Fuel is low. Refill it immediately. (#1)

(#1) This message will disappear after a while even if the problem that caused the message to appear is not corrected.

Warning and indicator message	Master warning indicator light	Sound	Cause and remedy
 52RM21190	Off	Off	The road may be icy. Drive very carefully. (#1)

(#1) This message will disappear after a while even if the problem that caused the message to appear is not corrected.

Vehicle with keyless push start system

Warning and indicator message	Master warning indicator light	Sound	Cause and remedy
 52RM21210	Off	Off	This message is displayed when “ACC” position is selected as the ignition mode. (#1)
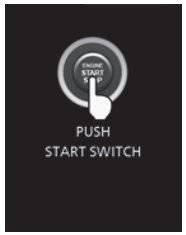 52RM21220	Off	Off	The brake pedal (for automatic transmission models) or the clutch pedal (for manual transmission models) is depressed. Press the engine switch to start the engine.

(#1) This message will disappear after a while even if the problem that caused the message to appear is not corrected.

Warning and indicator message	Master warning indicator light	Sound	Cause and remedy
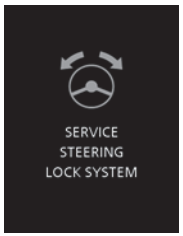 52RM21230	Blinks 	Beep (one time from interior buzzer)	There is a problem with the steering lock system. Have your vehicle inspected by a SUZUKI dealer or a qualified workshop.
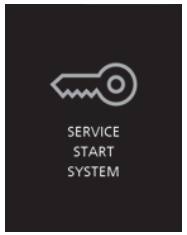 52RM21240	Blinks 	Beep (one time from interior buzzer)	There is a problem with the immobilizer/ keyless push start system. Also, the vehicle lead-acid battery voltage may be decreased. When the message is displayed even if you start the engine with normal voltage of the vehicle lead-acid battery, have your vehicle inspected by a SUZUKI dealer or a qualified workshop.

Warning and indicator message	Master warning indicator light	Sound	Cause and remedy
 52RM21250  52RM21260	Blinks 	By certain conditions, some kind of sound you will hear from interior and/or exterior of the vehicle.	The remote controller may be outside the vehicle or its battery may have become discharged. Locate the remote controller or touch the engine switch with the remote controller. If the message still appears, replace the remote controller battery.

Warning and indicator message	Master warning indicator light	Sound	Cause and remedy
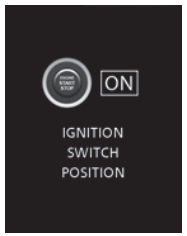 52RM21270	Off	Off	This message is displayed when “ON” position is selected as the ignition mode. (#1)
 52RM21280	Blinks 	Beep (one time from interior buzzer)	The steering lock is not disengaged. While lightly turning the steering wheel in both directions, press the engine switch again.

(#1) This message will disappear after a while even if the problem that caused the message to appear is not corrected.

Warning and indicator message	Master warning indicator light	Sound	Cause and remedy
 52RM21290	Off	Off	The remote controller battery is about to become flat. Replace the battery. (#1)
Manual transmission  52RM21300	Off	Off	The engine switch is pressed without depressing the brake and clutch pedals. Try again as instructed by the message.

(#1) This message will disappear after a while even if the problem that caused the message to appear is not corrected.

Warning and indicator message	Master warning indicator light	Sound	Cause and remedy
Automatic transmission  52RM21310	Off	Off	The engine switch is pressed with the gear-shift lever in a position other than “P” or “N” and depressing the brake pedal. Try again as instructed by message.
Automatic transmission  52RM21320	Off	Off	The engine switch is pressed with the gear-shift lever in a position other than “P”. Try again as instructed by the message.

Vehicle with ESP® system

Warning and indicator message	Master warning indicator light	Sound	Cause and remedy
 52RM21340	Blinks 	Beep (one time from interior buzzer)	There may be a problem with ESP® system. Have your vehicle inspected by a SUZUKI dealer or a qualified workshop.
Hill hold control system  52RM21350	Blinks 	Beep (one time from interior buzzer)	There may be a problem with hill hold control system (if equipped). Have your vehicle inspected by a SUZUKI dealer or a qualified workshop.

Warning and Indicator Lights

Brake System Warning Light

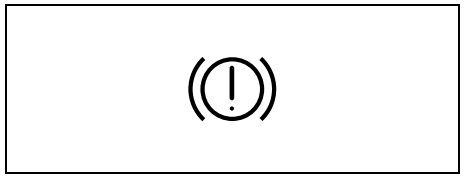

82K170

Three different types of operations exist depending on the vehicle's specification.

- The light comes on briefly when the ignition switch is turned "ON" or pushed to "ON" mode.
- The light comes on when the parking brake is engaged with the ignition switch in "ON" position or the ignition mode is "ON".
- The light comes on under either or both of above two conditions.

The light also comes on when the fluid in the brake fluid reservoir falls below the specified level.

The light should go out after starting the engine and fully releasing the parking brake, if the fluid level in the brake fluid reservoir is adequate.

The light also comes on together with the ABS warning light when the rear brake force control function (proportioning valve function) of the ABS system fails.

If the brake system warning light comes on while you are driving the vehicle, it may mean that there is something wrong with the vehicle's brake system.
If this happens:

1) Pull off the road and stop carefully.

⚠ WARNING

Remember that stopping distance may be longer, you may have to push harder on the pedal, and the pedal may go down farther than normal.

2) Test the brakes by carefully starting and stopping the vehicle on the shoulder of the road.
3) If you determine that it is safe, drive the vehicle cautiously at low speed to the nearest SUZUKI dealer or a qualified workshop for repairs or tow the vehicle to the nearest a SUZUKI dealer or a qualified workshop for repairs.

⚠ WARNING

If any of the following conditions occur, you should immediately ask a SUZUKI dealer or a qualified workshop to inspect the brake system.

- **If the brake system warning light does not go out after the engine has been started and the parking brake has been fully released.**
- **If the brake system warning light does not come on when the ignition switch is turned "ON" or pushed to "ON" mode.**
- **If the brake system warning light comes on at any time during vehicle operation.**

NOTE:
Because the brake system is self-adjusting, the fluid level will drop as the brake pads become worn. Replenishing the brake fluid reservoir is considered normal periodic maintenance.

NOTE:
A buzzer sounds intermittently to remind you to release the parking brake if you start the vehicle without releasing the parking brake. Make sure that the parking brake is fully released and the brake system warning light turns off.

Anti-Lock Brake System (ABS) Warning Light

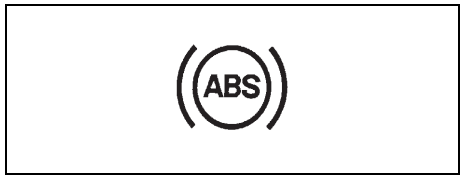

65D529

When the ignition switch is turned “ON” or pushed to “ON” mode, this light comes on briefly so you can check that the light is working.
If the light stays on, or comes on when driving, there may be something wrong with the ABS.

If this happens:
1) Pull off the road and stop carefully.
2) Turn the ignition switch to LOCK position or change the ignition mode to “LOCK” (OFF) by pressing the engine switch and then start the engine again.

If the warning light comes on briefly and then turns off, the system is normal. If the warning light still stays on, something is wrong with the system.

If the light and the brake system warning light stay on or come on simultaneously when driving, your ABS system is equipped with the rear brake force control function (proportioning valve function) and there may be something wrong with both the rear brake force control function and then anti-lock function of the ABS system.

If one of the above occurs, have the system inspected by a SUZUKI dealer or a qualified workshop.
If the ABS becomes inoperative, the brake system will function as an ordinary brake system that does not have this ABS system.

For details of ABS system, refer to “Anti-Lock Brake System (ABS)” in “OPERATING YOUR VEHICLE” section.

Oil Pressure Warning Light



50G051

When the ignition switch is turned “ON” or pushed to “ON” mode, this light comes on. When the engine is started, the light goes out. The light will come on and remain on if there is insufficient oil pressure. If the light comes on when driving, pull off the road as soon as you can and stop the engine.
Check the oil level and add oil if necessary. If there is enough oil, the lubrication system should be inspected by a SUZUKI dealer or a qualified workshop before you drive the vehicle again.

NOTICE

- **If you operate the engine with this light on, severe engine damage can result.**
- **Do not rely on the oil pressure light to indicate the need to add oil. Periodically check the engine oil level.**

ESP® Warning Light (if equipped)



52KM133

ESP® is a registered trademark of Daimler AG.

This light blinks 5 times per second when one of the following systems is activated.
- Stability control system
- Traction control system

If this light blinks, drive carefully.

When the ignition switch is turned “ON” or pushed to “ON” mode, the light comes on briefly so you can check that the light is working. If the light stays on or comes on when driving, there may be something wrong with the ESP® systems (other than ABS). You should have the system inspected by a SUZUKI dealer or a qualified workshop.

For details of the ESP® systems, refer to “Electronic Stability Program (ESP®) (if equipped)” in “OPERATING YOUR VEHICLE” section.

⚠ WARNING

The ESP® systems cannot prevent accidents. Always drive carefully.

ESP® OFF Indicator Light (if equipped)



73R0196

When the ignition switch is turned “ON” or pushed to “ON” mode, this light comes on briefly so you can check that the light is working.

When the ESP® OFF switch is pushed to turn off the ESP® systems (other than ABS), the ESP® OFF indicator light comes on and stays on.

For details of the ESP® systems, refer to “Electronic Stability Program (ESP®) (if equipped)” in “OPERATING YOUR VEHICLE” section.

Charging Warning Light

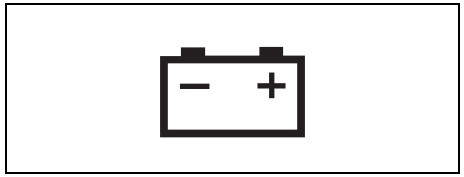

50G052

When the ignition switch is turned “ON” or pushed to “ON” mode, this light comes on. When the engine is started, the light goes out. The light will come on and remain on if there is something wrong with the lead-acid battery charging system. If the light comes on when the engine is running, the charging system should be inspected immediately by a SUZUKI dealer or a qualified workshop.

Driver’s Seat Belt Reminder Light / Front Passenger’s Seat Belt Reminder Light



60G049

When the driver or front passenger does not buckle his or her seat belt, this light will come on and/or blink.
For details of the seat belt reminder, refer to “Seat Belts and Child Restraint Systems” in “FOR SAFE DRIVING” section.

AIRBAG Light



63J030

When the ignition switch is turned “ON” or pushed to “ON” mode, this light comes on for several seconds so you can check that the light is working.

The light will come on and stay on if there is a problem in the airbag system or the seat belt pretensioner system.

⚠ WARNING

If the AIRBAG light does not blink or come on briefly when the ignition switch is turned “ON” or pushed to “ON” mode, stays on for more than 10 seconds, or comes on while driving, the airbag system or the seat belt pretensioner system may not work properly, which could result in serious injury in the event of a collision. Have both systems inspected by a SUZUKI dealer or a qualified workshop.

Malfunction Indicator Light

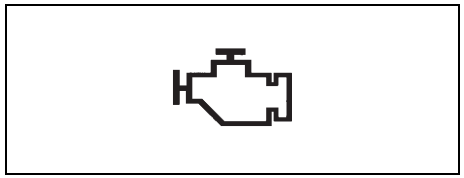

65D530

Your vehicle has a computer-controlled emission control system. A malfunction indicator light is provided on the instrument cluster to indicate when it is necessary to have the emission control system serviced. When the ignition switch is turned “ON” or pushed to “ON” mode, this light comes on. When the engine is started, the light goes out.

If the malfunction indicator light comes on or blinks when the engine is running, there is a damage in the emission control system.
Bring the vehicle to a SUZUKI dealer or a qualified workshop to have the damage fixed.

⚠ CAUTION

If this light blinks, stop your vehicle immediately in a safe place to avoid catalyst's melting problem since there may be a misfire in the engine.
- **Do not drive or stop over such as withered grasses.**
- **Drive slowly if required to move the vehicle.**

Also, if this light comes on when the engine is running, there is a problem with the automatic transmission system. Ask a SUZUKI dealer or a qualified workshop to have the system inspected.

NOTICE

Continuing to drive the vehicle when the malfunction indicator light is on or blinking can cause permanent damage to the vehicle’s emission control system, and can affect fuel economy and driveability.

Transmission Warning Light (if equipped)

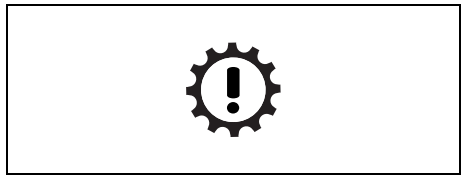

81A262

When the ignition switch is turned “ON” or pushed to “ON” mode, this light comes on for several seconds so you can check that the light is working.

If this light comes on when the engine is running, there is a problem with the automatic transmission system. Ask a SUZUKI dealer or a qualified workshop to have the system inspected.

Immobilizer/Keyless Push Start System Warning Light

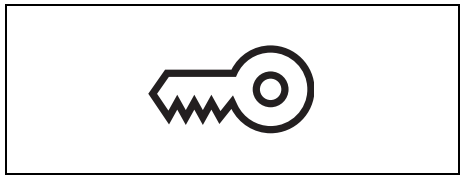

80JM122

When the ignition switch is turned “ON” or pushed to “ON” mode, this light comes on briefly so you can check that the light is working.

If this light blinks or stays on, there is a problem with the system.

If this light still blinks or stays on even if you start the engine with normal voltage of the vehicle battery, ask a SUZUKI dealer or a qualified workshop to have the system inspected.

Open Door Warning Light

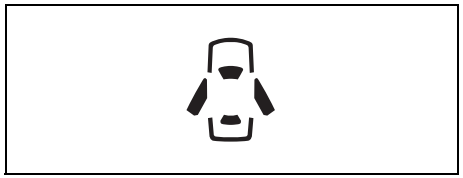

54G391

This light remains on until all doors (including the tailgate) are completely closed.

If any door (including the tailgate) is open when the vehicle is moving, a ding sounds to remind you to close all doors completely.

Low Fuel Warning Light



54G343

If this light comes on, refuel the fuel tank as soon as possible.

When this light comes on, a ding sounds once to remind you to refuel.
If you do not refuel, a ding sounds every time when the ignition switch is turned “ON” or pushed to “ON” mode.

NOTE:
The activation point of this light varies depending on road conditions (for example, slope or curve) and driving conditions because of fuel movement in the tank.

Electric Power Steering Light



79J039

When the ignition switch is turned “ON” or pushed to “ON” mode, this light comes on. When the engine is started, the light goes out.

If this light comes on while driving, the power steering system may not work properly. Have the system inspected by a SUZUKI dealer or a qualified workshop.

NOTE:
The following steering wheel operations may gradually take more effort while parking or driving at a very low speed. This is not a malfunction of the steering system, but the power steering control system limits the power assist in order to prevent it from overheating.

- *The steering wheel is operated very often.*
- *The steering wheel is kept in a fully turned position for a long while.*

When the power steering control system cool down, the power steering system will return to its original condition.
However, repeating these operations could cause damage to the power steering system.

- *This light comes on when continuing period of time of limiting the power assist in order to prevent from overheating.*

NOTE:
If the power steering system does not work properly, it will require greater effort to steer, but you still will be able to steer.

NOTE:
If the steering is operated, you may hear noise caused by electric power steering operation. This is normal and indicates that the power steering system works properly.

Turn Signal Indicators

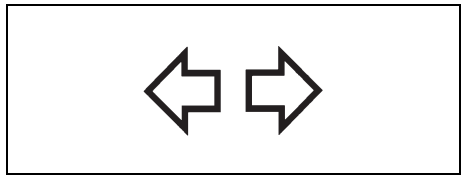

50G055

When you turn on the left or right turn signals, the corresponding green arrow on the instrument panel will blink along with the respective turn signal lights. When you turn on the hazard warning switch, both arrows will blink along with all of the turn signal lights.

Main Beam (high beam) Indicator Light

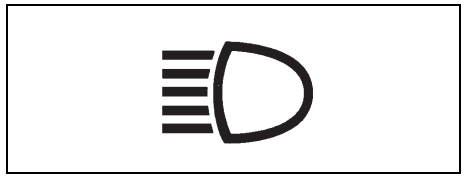

50G056

This indicator comes on when headlight main beams (high beams) are turned on.

“PUSH” Indicator Light (if equipped)

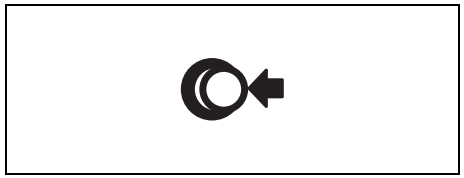

82K174

If this light comes on when depressing the brake pedal for automatic transmission vehicles, or the clutch pedal for manual transmission vehicles, you can start the engine.

“ACC” Indicator Light (if equipped)



82K097

This light comes on when the ignition mode is “ACC”.

Ignition “ON” Indicator Light (if equipped)

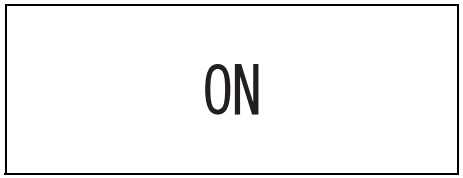

82K098

This light comes on when the ignition mode is “ON” with the engine off.

“RE-GEN” Indicator Light

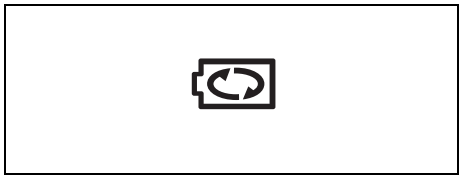

72RM02001

This light comes on for several seconds when the ignition switch is turned to the “ON” position or the engine switch is pressed to change the ignition mode to “ON” so you can check that the light is working.
When the deceleration energy regenerating function is working, this indicator light will come on.

Illumination Indicator Light

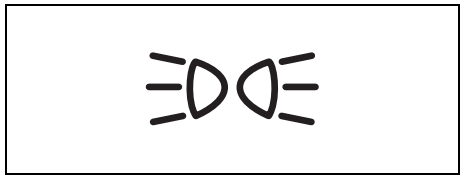

64J045

This indicator light comes on while the position lights, tail light and/or the headlights are on.

Front Fog Light Indicator Light (if equipped)

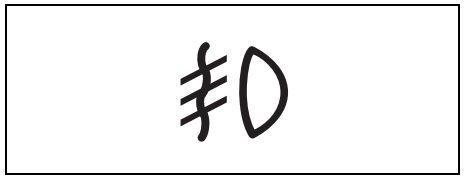

68PM00268

The front fog light indicator light comes on when the front fog light operates.

Over Drive Off Indicator (if equipped)



73R0047

This light comes on when OD switch is OFF.

ENG A-STOP Indicator Light

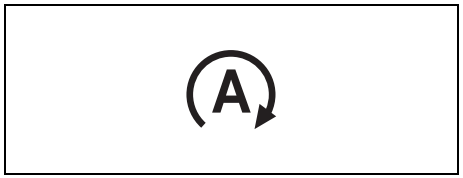

72M00032

When the ignition switch is turned “ON”, this light comes on briefly so you can check that the light is working.

When the engine stops automatically, this light comes on.

For details, refer to “ENG A-STOP System (Engine Auto Stop Start System)” in “OPERATING YOUR VEHICLE” section.

ENG A-STOP OFF Light

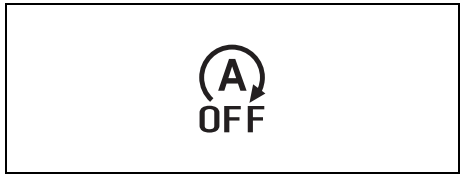

72M00159

When the ignition switch is turned “ON”, this light comes on briefly so you can check that the light is working.

When you push the ENG A-STOP OFF switch, this light comes on.

If this light blinks when driving, there may be something wrong with the ENG A-STOP system or the Smart Hybrid system. You should have the system inspected by a SUZUKI dealer or a qualified workshop.

For details, refer to “ENG A-STOP System (Engine Auto Stop Start System)” and “Smart Hybrid” in “OPERATING YOUR VEHICLE” section.

Cruise indicator light (if equipped)

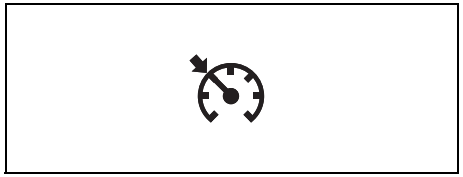

81P40090

When the cruise control system is on, this light will be on.

“SET” indicator light (if equipped)



65D474

When a cruising speed of the cruise control is set, this light will be on.

Master Warning Indicator Light



80P0382

When the ignition switch is turned “ON” or pushed to “ON” mode, this light comes on briefly so you can check that the light is working.

When the information display shows warning and indicator messages, this indicator light may also blink.

For details, refer to “Information display” in this section.

Lighting Control Lever

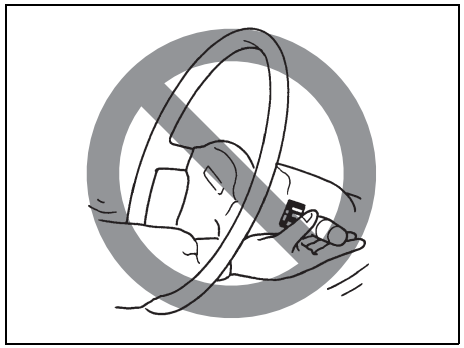

65D611

⚠ WARNING

To avoid possible injury, do not operate controls by reaching through the steering wheel.

Lighting Operation

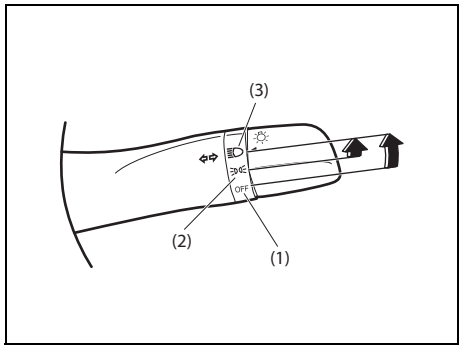

86T0103

To turn the lights on or off, twist the knob on the end of the lever. There are three positions:

OFF (1)
All lights are off.

(2)
Front position lights, tail lights, license plate light and instrument lights are on, but headlights are off.

(3)
Front position lights, tail lights, license plate light, instrument lights and headlights are on.

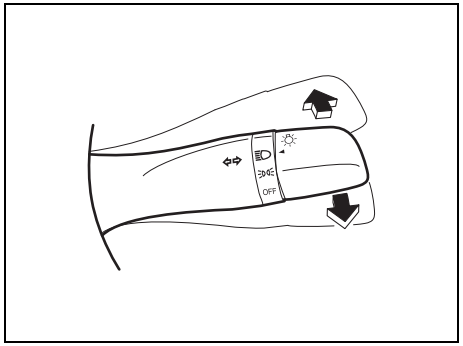

86T0104

With the headlights on, push the lever forward to switch to the high beams (main beams) or pull the lever toward you to switch to the low beams. When the high beams (main beams) are on, a light on the instrument cluster will come on. To momentarily activate the high beams (main beams) as a passing signal, pull the lever slightly toward you and release it when you have completed the signal.

Automatic Light Operation (if equipped)

EXAMPLE

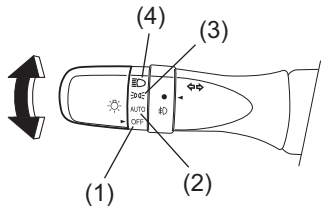

86T0105

EXAMPLE

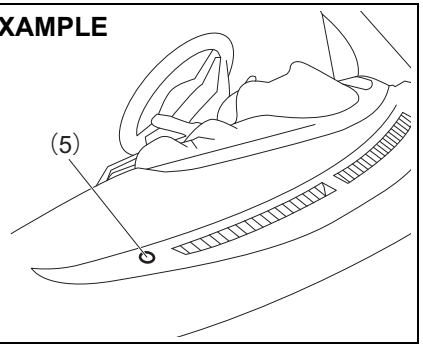

52RM20200

Your vehicle's lighting system is controlled by two main systems: the lighting switch and the auto-on headlight system (when the lighting switch is in "AUTO" position).
The two systems work together to operate your lights as shown in the following chart:

ON: Lights ON
LIGHT: When it is light around the light sensor (5).
DARK: When it is dark around the light sensor (5).

Lighting switch position	Main lights to be operated	Ignition switch in the "LOCK" or "ACC" position / Ignition mode LOCK (OFF) or ACC		Ignition switch in the "ON" position / Ignition mode ON	
		LIGHT	DARK	LIGHT	DARK
(1) OFF	Position lights, Tail lights	–	–	–	–
	Headlights	–	–	–	–
(2) AUTO	Position lights, Tail lights	–	–	–	ON
	Headlights	–	–	–	ON
(3)	Position lights, Tail lights	ON	ON	ON	ON
	Headlights	–	–	–	–
(4)	Position lights, Tail lights	ON	ON	ON	ON
	Headlights	ON	ON	ON	ON

To turn the lights on or off, twist the knob on the end of the lever. There are four positions:

OFF (1)
All lights are off.

AUTO (2)
This function works when the ignition switch is turned to “ON” position or the engine switch is pressed to change the ignition mode to ON. The headlights and position lights are turned on and off automatically according to the amount of outside light detected by a sensor. They go out automatically when you turn the ignition switch to “ACC” or “LOCK” position or change the ignition mode to ACC or LOCK (OFF) by pressing the engine switch.

The light sensor (5) for sensing the amount of outside light is installed on the passenger’s seat side of instrument panel.

When the following conditions are met, you can use the high beam assist (if equipped).
- The ignition switch is turned to “ON” position or the engine switch is pressed to change the ignition mode to ON
- The headlights are turned on when it becomes dark outside the vehicle
- The lighting switch is in “AUTO” position
- The lighting control lever is pushed forward

For details, refer to “High beam assist” in “OPERATING YOUR VEHICLE” section.

⚠ CAUTION

If the light sensor area of the windshield is covered with mud, ice, or other similar substances, the headlights and position lights may be turned on even when it is still light outside.

NOTE:
- *Avoid covering the light sensor area of the windshield with a sticker. The sticker may impair the performance of the sensor and make the system unable to control operation of the lights correctly.*
- *If you turned the ignition switch to “ON” position or changed the ignition mode to ON by pressing the engine switch and “AUTO” position remains selected, the headlights and position lights come on automatically as it gets dark outside, even with the engine not running. Leaving the lights lit for a long time may lead to a completely discharged battery.*

(3)
Front position lights, tail lights, license plate light and instrument lights are on, but headlights are off.

(4)
Front position lights, tail lights, license plate light, instrument lights and headlights are on.

EXAMPLE

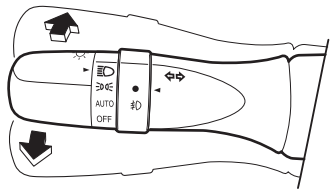

86T0106

With the headlights on, push the lever forward to switch to the high beams (main beams) and pull the lever toward you to switch to the low beams. When the high beams (main beams) are on, a light on the instrument cluster will come on. To momentarily activate the high beams (main beams) as a passing signal, pull the lever slightly toward you and release it when you have completed the signal.

Auto-on headlight system

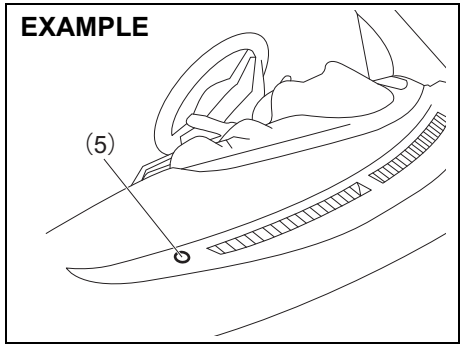

52RM20200

The auto-on headlight system automatically turns on all lights that are operated by the lighting switch, when the following three conditions are all met.

Conditions for auto-on headlight system operation:
1) It is dark around the light sensor (5).
2) The lighting switch is in “AUTO” position.
3) You turn the ignition switch to “ON” position or press the engine switch to change the ignition mode to ON.

This system is activated by a signal from the light sensor (5) on the passenger side of instrument panel. Do not cover the sensor (5). Otherwise, the system will not work correctly.

⚠ WARNING

It takes about 5 seconds for the light sensor to react to a change in lighting conditions. To help avoid an accident due to reduced visibility, turn on your headlights before driving into a tunnel, parking structure, etc.

NOTE:
The light sensor reacts even to infrared rays, so it may operate incorrectly when there are strong infrared rays.

Light Reminder Buzzer

The interior buzzer continuously beeps if you open the driver’s door without turning off the headlights and position lights. This function is triggered under the following condition:
The headlights and/or position lights are on even after the ignition switch is turned off, or the engine switch is pressed to change the ignition mode to LOCK (OFF).

The buzzer stops sounding when you turn off the headlights and position lights.

NOTE:
A message is indicated on the information display in the instrument cluster while the buzzer is sounding.

Guide me light (if equipped)

Guide me light has two functions of “To home” and “To car” for improving your visibility in the dark.

“To home” function
Even after you leave the car, the ground will be illuminated for a short while with this function. You can turn on the front position lights and the headlights in the low beam setting for about 10 seconds after the ignition switch is turned to “LOCK” position or the engine switch is pressed to change the ignition mode to LOCK (OFF).

To set the function:
1) Turn the lighting switch to “AUTO” position.
2) Turn the ignition switch to “LOCK” position or press the engine switch to change the ignition mode to LOCK (OFF).
3) Pull the lighting control lever toward you once and open the driver’s side door within 60 seconds. Or pull the lighting control lever toward you once while the driver’s side door is open.

To cancel the function:
Perform any of the following operations.
- If your vehicle is equipped with the keyless entry system (if equipped), it is necessary to insert the ignition key in the ignition switch.
- Pull the lighting control lever toward you once.
- Turn the ignition switch to “ACC” or “ON” position or change the ignition mode to ACC or ON by pressing the engine switch.
- Turn the lighting switch to any other position than “AUTO” position.

NOTE:
- *When the “To home” is functioning, the front fog lights (if equipped), rear fog light and the headlights (high beam) are not turned on.*
- *Lighting time of the “To home” function can be changed on the information display. Refer to “Information display” in this section.*

“To car” function
Before you get in the vehicle, the ground will be illuminated for a short while to easily lead the driver to the vehicle. If UNLOCK button of the keyless push start system remote controller (if equipped) or the keyless entry system transmitter (if equipped) is pressed while the lighting switch is positioned in “AUTO”, the front position lights and the headlights in the low beam are turned on for 10 seconds.
This function will operate only when it is dark outside the vehicle.

To cancel the function:
Perform any of the following operations.
- If your vehicle is equipped with the keyless entry system (if equipped), it is necessary to insert the ignition key in the ignition switch.
- Lock the doors by using the keyless push start system remote controller, the request switch or the keyless entry system transmitter, or the key in the driver’s door lock.
- Turn the ignition switch to “ACC” or “ON” position or change the ignition mode to ACC or ON by pressing the engine switch.
- Turn the lighting switch to any other position than “AUTO” position.

NOTE:
- *When the “To car” is functioning, the front fog lights (if equipped), rear fog light and the headlights (high beam) are not turned on.*
- *Lighting time of the “To car” function can be changed on the information display. Refer to “Information display” in this section.*

Front Fog Light Switch (if equipped)

EXAMPLE

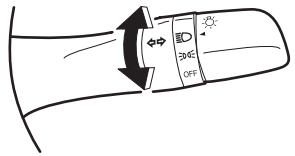

86T0107

To turn the front fog light on, twist the knob as shown in the illustration with the position lights, tail lights and/or the headlights are on. When the front fog light is on, an indicator light on the instrument cluster will come on.

Turn Signal Control Lever

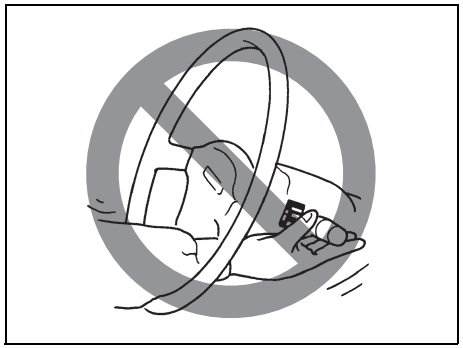

65D611

⚠ WARNING

To avoid possible injury, do not operate controls by reaching through the steering wheel.

Turn Signal Operation

With the ignition switch in “ON” position or the ignition mode “ON”, move the lever upward or downward to activate the right or left turn signals.

Normal turn signal

EXAMPLE

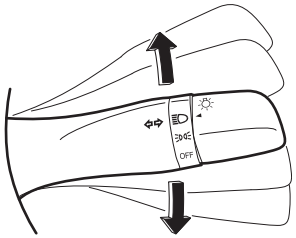

86T0108

Move the lever all the way upward or downward to signal. When the turn is completed, the signal will cancel and the lever will return to its normal position.

Lane change signal

EXAMPLE

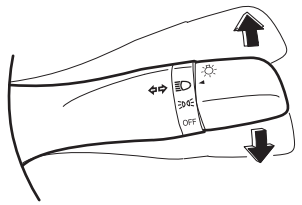

86T0109

Move the lever partially upward or downward to turn right or left and hold the lever in the moved position.

- The turn signal and its indicator flash while the lever is held at the moved position.
- The turn signal and its indicator flash 3 times even if you returned the lever immediately after the activation.

NOTE:
The turn signal and its indicator can be set whether they flash 3 times after the turn signal lever is returned via the information display. Refer to "Information display" in this section.

Hazard Warning Switch

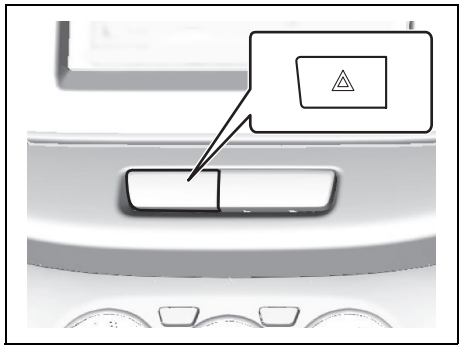

73R0011

Push the hazard warning switch to activate the hazard warning lights. All turn signal lights and both turn signal indicators will flash simultaneously. To turn off the lights, push the switch again.
Use the hazard warning lights to warn other drivers of possible risk of traffic hazard when you park your vehicle in case of emergency.

Windshield Wiper and Washer Lever

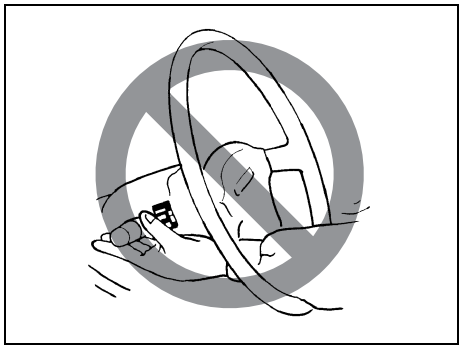

57L21128

⚠ WARNING

To avoid possible injury, do not operate controls by reaching through the steering wheel.

Wiper and Washer Operation

When the ignition switch is in ON position or the ignition mode is “ON”, you can use the wiper/washer lever or switch.

When the wipers are under heavy load such as covered by snow, the breaker will be activated and the wipers will stop operating to protect the wiper motor from overheating.

If the wiper stops during operation, do the following methods.

1) Stop the vehicle in a safe place, and turn the engine off.
2) Move the wiper lever and switch to “OFF” position.
3) Remove obstacles such as snow on the wipers.
4) After a while, when the temperature of the wiper motor becomes low enough, the breaker will be reset automatically and the wipers will be able to use.

If you cannot use the wipers after a while, there may be another problem. Ask a SUZUKI dealer or a qualified workshop to have the wipers inspected.

Windshield Wipers

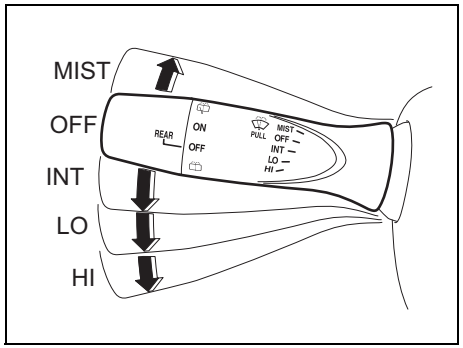

66RH037

To turn the windshield wipers on, move the lever down to one of the three operating positions. In “INT” position, the wipers operate intermittently. “INT” position is very convenient for driving in mist or light rain. In “LO” position, the wipers operate at a steady low speed. In “HI” position, the wipers operate at a steady high speed. To turn off the wipers, move the lever back to “OFF” position.

Move the lever up and hold it to “MIST” position, the windshield wipers will turn on continuously at low speed.

Windshield Washer

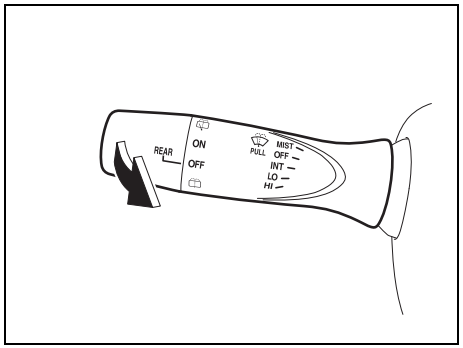

66RH038

To spray windshield washer fluid, pull the lever toward you. The windshield wipers will automatically turn on at low speed if they are not already on and “INT” position is equipped.

⚠ WARNING

- **To prevent windshield icing in cold weather, turn on the defroster to heat the windshield before and during windshield washer use.**
- **Do not use radiator antifreeze solution in the windshield washer reservoir. This can severely impair visibility when sprayed on the windshield, and also damage your vehicle’s paint.**

NOTICE

To help prevent damage to the windshield wiper and washer system components, you should take the following precautions:

- **Do not continue to hold in the lever when there is no windshield washer fluid being sprayed or the washer motor can be damaged.**
- **Do not attempt to remove dirt from a dry windshield with the wipers or you can damage the windshield and the wiper blades. Always wet the windshield with washer fluid before operating the wipers.**
- **Clear ice or packed snow from the wiper blades before using the wipers.**
- **Check the washer fluid level regularly. Check it often when the weather is bad.**
- **Only fill the washer fluid reservoir 3/4 full during cold weather to allow room for expansion if the temperature falls low enough to freeze the solution.**

Rear Window Wiper/Washer Switch

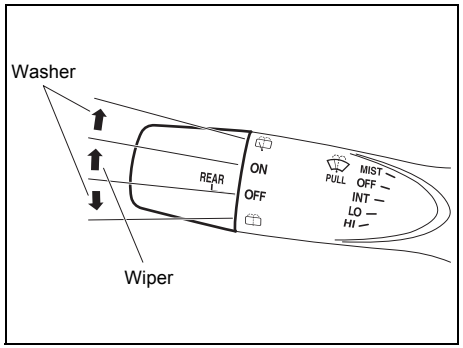

66RH039

To turn the rear wiper on, twist the rear wiper switch on the end of the lever forward to “ON” position. To turn the rear wiper off, twist the switch rearward to “OFF” position.

To spray window washer fluid, twist the switch rearward from “OFF” position, or twist the switch forward from “ON” position. The rear wiper will turn on automatically while spraying the window washer fluid when twisting the switch forward from the “ON” position.

NOTICE

Clear ice or snow from the rear window and rear wiper blade before using the rear wiper. Accumulated ice or snow could prevent the wiper blade from moving, causing damage to the wiper motor.

Tilt Steering Lock Lever

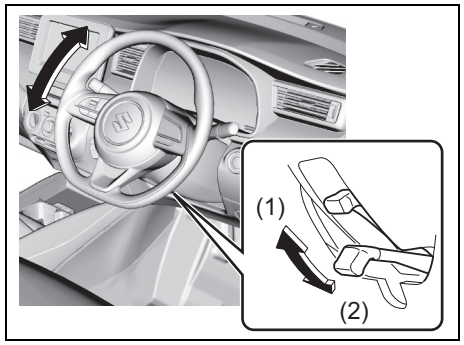

73R0012

(1) LOCK
(2) UNLOCK

The lock lever is located under the steering column. To adjust the steering wheel height:

1) Push down the lock lever to unlock the steering column.
2) Adjust the steering wheel to the desired height and lock the steering column by pulling up the lock lever.
3) Try moving the steering wheel up and down to make sure it is securely locked in position.

⚠ WARNING

Never attempt to adjust the steering wheel while the vehicle is moving or you could lose control of the vehicle.

Horn

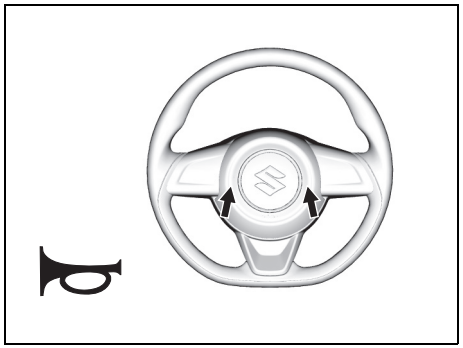

73R0062

Press the horn button of the steering wheel to sound the horn. The horn will sound with the ignition switch in any position or any ignition mode.

Heated Rear Window Switch (if equipped)

Type A

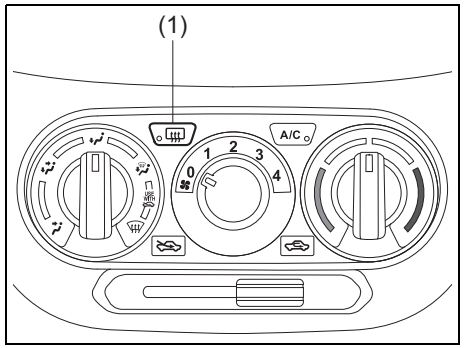

73RS001

Type B

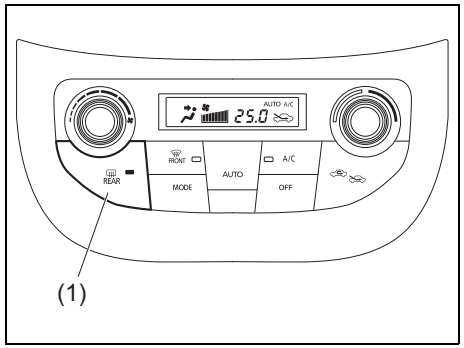

72R0043

When the rear window is misted, push this switch (1) to clear the window.

An indicator light will come on when the defogger is on. The defogger will work only when the engine is running. To turn off the defogger, push the switch (1) again.

NOTICE
The heated rear window use a large amount of electricity. Turn off the switch after the window have become clear.

NOTE:

- *The defogger will work only when the engine is running.*
- *The defogger will automatically turn off after the defogger remains on for 15 minutes to prevent discharging of the lead-acid battery.*

Vehicle Loading

Your vehicle was designed for specific weight capacities. The weight capacities of your vehicle are indicated by the Gross Vehicle Weight Rating (GVWR) and the Permissible maximum Axle Weight (PAW, front and rear). The GVWR and PAW (front and rear) are listed in “SPECIFICATIONS” section.

GVWR – Maximum permissible overall weight of the fully loaded vehicle (including all the occupants, accessories and cargo plus the trailer nose weight if towing a trailer).
PAW – (Front and Rear) Maximum permissible weight on an individual axle.

Actual weight of the loaded vehicle and actual loads at the front and rear axles can only be determined by weighing the vehicle. Compare these weights to the GVWR and PAW (front and rear). If the gross vehicle weight or the load on either axle exceeds these ratings, you must remove enough weight to bring the load down to the rated capacity.

⚠ WARNING

Never overload your vehicle. The gross vehicle weight (sum of the weights of the vehicle, all the occupants, accessories, cargo plus trailer nose weight if towing a trailer) must never exceed the Gross Vehicle Weight Rating (GVWR). In addition, never distribute a load so that the weight on either the front or rear axle exceeds the Permissible maximum Axle Weight (PAW).

⚠ WARNING

Always distribute cargo evenly. To avoid personal injury or damage to your vehicle, always secure cargo to prevent it from shifting if the vehicle moves suddenly. Place heavier objects on the floor and as far forward in the cargo area as possible. Never pile cargo higher than the top of the seat backs.

Trailer Towing Your Vehicle

Your SUZUKI was originally designed to carry people and a normal amount of cargo, not to tow a trailer.

OPERATING YOUR VEHICLE

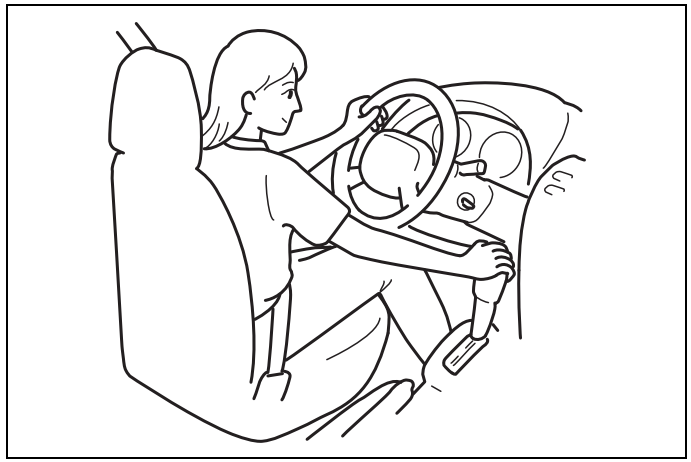

60G408

Exhaust Gas Warning 3-1
Daily Inspection Checklist 3-1
Engine Oil Consumption 3-2
Ignition Switch (Vehicle without
Keyless Push Start System) (if equipped) 3-3
Engine Switch (Vehicle with
Keyless Push Start System) (if equipped) 3-5
Keyless Push Start System (if equipped) 3-7
Parking Brake Lever 3-11
Pedal 3-12
Starting / Stopping Engine (Vehicle without
Keyless Push Start System) (if equipped) 3-13
Starting / Stopping Engine (Vehicle with
Keyless Push Start System) (if equipped) 3-14
Using the Transmission 3-18
Gearshift Indicator (if equipped) 3-24
Smart Hybrid 3-25
ENG A-STOP System (Engine Auto Stop Start System) . 3-28
Cruise control (if equipped) 3-34
Parking Sensors 3-36
Rearview Camera (if equipped) 3-43
Braking 3-47
Electronic Stability Program (ESP®) (if equipped) 3-50

Exhaust Gas Warning

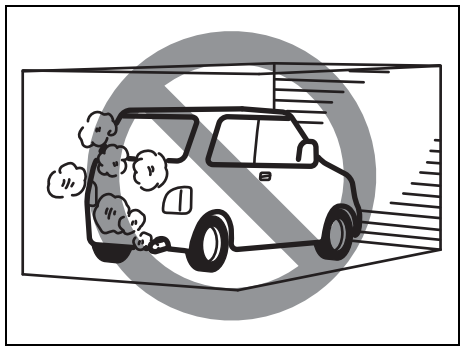

52D334

⚠ WARNING

Avoid breathing exhaust gases. Exhaust gases contain carbon monoxide, a potentially lethal gas that is colorless and odorless. Since carbon monoxide is difficult to detect by itself, take the following precautions to help prevent carbon monoxide from entering your vehicle.

- **Do not leave the engine running in garages or other confined areas.**

(Continued)

⚠ WARNING

(Continued)

- **Do not park with the engine running for a long period of time, even in an open area. If it is necessary to sit for a short time in a parked vehicle with the engine running, check that the air intake selector is set to FRESH AIR and the blower is at high speed.**
- **Avoid operating the vehicle with the tailgate or trunk open. If it is necessary to do so, check that the sunroof (if equipped) and all windows are closed, and the blower is at high speed with the air intake selector set to FRESH AIR.**
- **To allow proper operation of your vehicle's ventilation system, keep the air inlet grill in front of the windshield clear of snow, leaves or other obstructions at all times.**
- **Keep the exhaust tailpipe area clear of snow and other material to help reduce the buildup of exhaust gases under the vehicle. This is particularly important when parked in blizzard conditions.**
- **Have the exhaust system inspected periodically for damage and leakage. Any damage or leakage should be repaired immediately.**

Daily Inspection Checklist

Before Driving

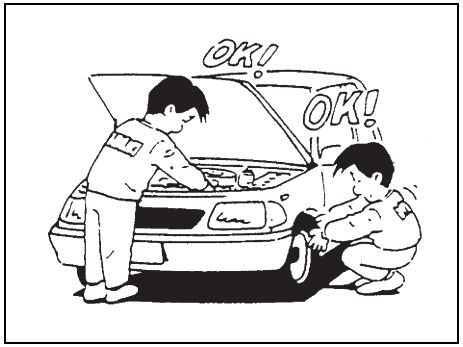

60A187S

1) Make sure that windows, mirrors, lights and reflectors are clean and unobstructed.
2) Visually check the tyres for the following points:
   – the depth of the tread groove
   – abnormal wear, cracks and damage
   – loose wheel nuts
   – existence of foreign material such as nails, stones, etc.

Refer to "Tyres" in "INSPECTION AND MAINTENANCE" section for details.

3) Look for fluid and oil leakage.

NOTE:
It is normal for water to drip from the air conditioning system while and after use.

4) Make sure the hood is fully closed and latched.
5) Check the headlights, turn signal lights, stop lights and horn for proper operation.
6) Adjust the seat and head restraint (if equipped).
7) Check the brake pedal feeling and the adjustment condition for the parking brake lever or pedal.
   Refer to “Brake” in “INSPECTION AND MAINTENANCE” section for details.
8) Adjust the mirrors.
9) Make sure that you and all passengers have properly fastened the seat belts.
10) Make sure that all warning lights come on as the ignition switch is turned to ON position or the ignition switch is turned “ON” or pushed to “ON” mode.
11) Check all gauges.
12) Make sure that the BRAKE SYSTEM WARNING light turns off when the parking brake is released.

Once a week, or each time you fill your fuel tank, perform the following under-hood checks:

1) Engine oil level
2) Coolant level
3) Brake fluid level
4) Battery fluid (acid) level
5) Windshield washer fluid level
6) Hood latch operation
   Pull the hood release handle inside the vehicle. Make sure that you cannot open the hood all the way without releasing the secondary latch. Be sure to close the hood securely after checking for proper latch operation. See the item “All latches, hinges and locks” of “CHASSIS AND BODY” in “Periodic Maintenance Schedule” in “INSPECTION AND MAINTENANCE” section for lubrication schedule.

⚠ WARNING

Make sure the hood is fully closed and latched before driving. If it is not, it can fly up unexpectedly during driving, obstructing your view and resulting in an accident.

Once a month, or each time you fill your fuel tank, check the tyre pressure using a tyre pressure gauge. Also check the tyre pressure of the spare tyre.

Engine Oil Consumption

It is normal for the engine to consume some engine oil during normal vehicle operation.
The amount of engine oil consumption depends on viscosity and quality of the oil and your driving conditions.
More oil is consumed during high-speed driving and when there is frequent acceleration and deceleration. Under high loads, your engine also will consume more oil.
A new engine also consumes more oil, since its pistons, piston rings and cylinder walls have not yet become conditioned. New engines reach the normal level of oil consumption only after approximately 5000 km (3000 miles) driving.

Oil consumption:
Max. 1.0 L per 1000 km
(1 Qt. per 600 miles)

When judging the amount of oil consumption, note that the oil may become diluted and it is difficult to judge the accurate oil level.
As an example, if a vehicle is used for repeated short trips, and consumes a normal amount of oil, the dipstick may not show any drop in the oil level at all, even after 1000 km (600 miles) or more of driving. This is because the oil is gradually becoming diluted with fuel or moisture,

making it appear that the oil level has not changed.
You should also be aware that the diluting ingredients evaporate out when the vehicle is subsequently driven at high speeds, such as on an expressway, making it appear that oil is excessively consumed after high-speed driving.

Ignition Switch (Vehicle without Keyless Push Start System) (if equipped)

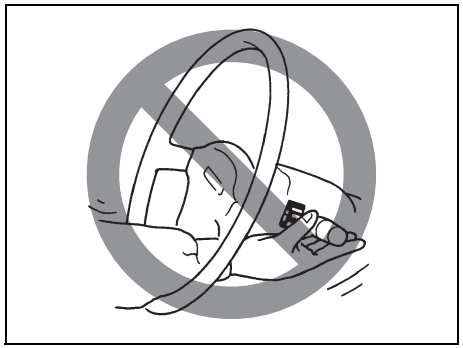

65D611

⚠ WARNING

To avoid possible injury, do not operate controls by reaching through the steering wheel.

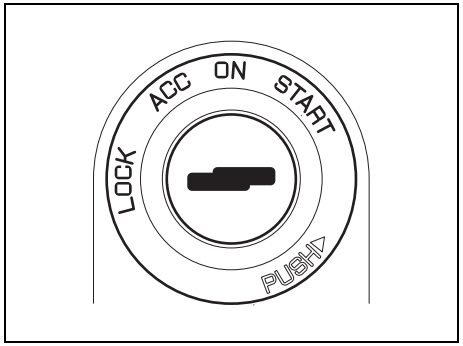

68PH00310

The ignition switch has the following four positions:

LOCK
This is the normal parking position. It is the only position in which the key can be removed.

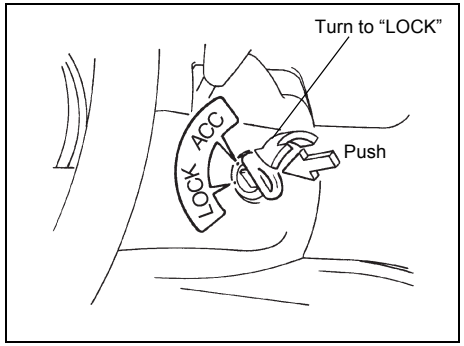

60G033

• **Manual Transmission vehicles**
You must push in the key to turn it to “LOCK” position. It locks the ignition, and prevents normal use of the steering wheel after the key is removed.

• **Automatic Transmission vehicles**
The gearshift lever must be in “P” (Park) position to turn the key to “LOCK” position. It locks the ignition and prevents normal use of the steering wheel and gearshift lever.

To release the steering lock, insert the key and turn it clockwise to one of the other positions. If you have trouble turning the key to unlock the steering wheel, try turning the steering wheel slightly to the right or left while turning the key.

ACC
Accessories such as the radio can operate, but the engine is off.

ON
This is the normal operating position. All electrical systems are on.

START
This is the position for starting the engine using the starter motor. The key should be released from this position as soon as the engine starts.

Ignition key reminder
A buzzer sounds intermittently to remind you to remove the ignition key if it is in the ignition switch when the driver’s door is opened.

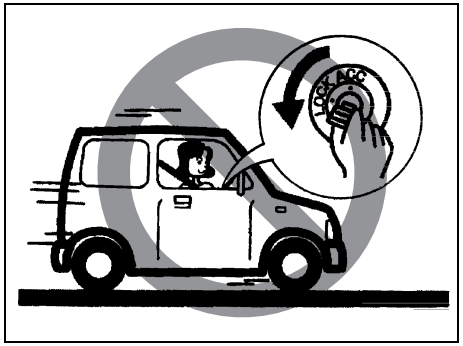

81A297S

⚠ WARNING

- **Never return the ignition switch to the “LOCK” position and remove the ignition key while the vehicle is moving. The steering wheel will lock and you will not be able to steer the vehicle.**

(Continued)

⚠ WARNING

(Continued)

- **Always return the ignition switch to "LOCK" position and remove the ignition key when leaving the vehicle even only for a short time. Also do not leave children alone in a parked vehicle. Unattended children may be able to start the vehicle or shift the transmission into neutral, which could result in an accident. There is also a danger that children may injure themselves by playing with the power windows or other moving features of the vehicle. In addition, heat build-up or extremely cold temperatures inside the vehicle can be fatal to children.**

NOTICE

Do not leave the engine switch in ACC or ON mode when the engine is not running. Avoid using the radio or other electric accessories for a long time when the engine switch is in ACC or ON mode when the engine is not running, otherwise the lead-acid battery may discharge.

Engine Switch (Vehicle with Keyless Push Start System) (if equipped)

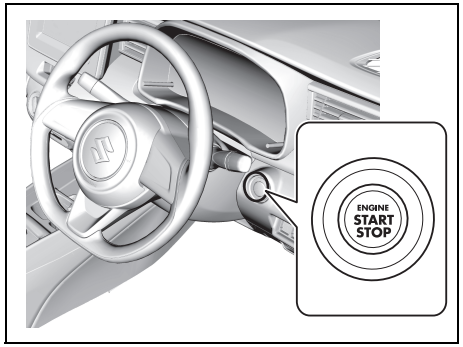

73R0063

LOCK (OFF)
This mode is for parking the vehicle. When this mode is selected by pressing the engine switch and then any door (including the tailgate) is opened or closed, the steering will be locked automatically.

ACC
Press the engine switch to select this ignition mode to use such electric equipment as the audio system, outside rearview mirrors and accessory socket with the engine off. When this position is selected, the "ACC" indicator light in the instrument cluster comes on. Refer to "Warning and Indicator Lights" in "BEFORE DRIVING" section for details.

ON

- **With the engine off**
  You can use such electric equipment as the power windows and wipers with the engine off. When this ignition mode is selected by pressing the engine switch, the Ignition "ON" indicator light in the instrument cluster will come on.
- **With the engine on**
  All electric equipment is operational. The vehicle can be driven when you have selected this ignition mode by pressing the engine switch.

START

- Manual transmission – Provided you have the keyless push start system remote controller with you, the engine automatically starts when you press the engine switch to select this ignition mode after shifting to “N” (Neutral) and depressing the brake and clutch pedals.

- Automatic transmission– Provided you have the keyless push start system remote controller with you, the engine automatically starts when you press the engine switch to select this ignition mode after placing the gearshift lever in P position and depressing the brake pedal. (If you need to re-start the engine while the vehicle is moving, shift into “N”.)

NOTICE

Do not leave the engine switch in “ACC” or “ON” mode when the engine is not running. Avoid using the radio or other electric accessories for a long time when the engine switch is in the “ACC” or “ON” mode when the engine is not running, otherwise the battery may discharge.

NOTE:

- *You do not need to keep the engine switch pressed to start the engine.*
- *In the presence of strong radio wave or noise, you may not be able to change the ignition mode to “ACC” or “ON” or to start the engine using the engine switch.*

Unreleased Steering Lock Warning

If the steering lock remains engaged when you press the engine switch to change the ignition mode to ON, warning is displayed on the information display in the instrument cluster. Refer to “Information Display” in “BEFORE DRIVING” section for details.

NOTE:
The steering lock may not be released and the immobilizer/keyless push start system warning light turns on if some load is applied on the steering wheel. If this happens, turn the steering wheel system to the right or left to relieve it from the load before you press the engine switch again to change to the desired ignition mode.

Keyless Push Start System (if equipped)

Provided the keyless push start system remote controller is within the interior workable area (refer to the related explanation in this section), you can use the engine switch for starting the engine and selecting an ignition mode (“ACC” or “ON”). In addition, the following functions can be used:

- Keyless entry function. Refer to “Keyless entry system transmitter /Keyless push start system remote controller (if equipped)” in “BEFORE DRIVING” section for details.
- Locking and unlocking doors (including the tailgate) using a request switch. Refer to “Keyless entry system transmitter /Keyless push start system remote controller (if equipped)” in “BEFORE DRIVING” section for details.
- Immobilizer (anti-theft) function. Refer to “Immobilizer System” in “BEFORE DRIVING” section for details.

Engine Switch Illumination

The engine switch is illuminated (lit) in the following situations:

- When the engine is off and the driver’s door is open, or for 15 seconds after the driver’s door is closed. The illumination will fade out after 15 seconds passed.
- When the engine is off and the position lights are on. The illumination will go out when the position lights are turned off.
- When the engine is on and the position lights and/or the headlights are on. The illumination will go out when the position-lights and the headlights are turned off.

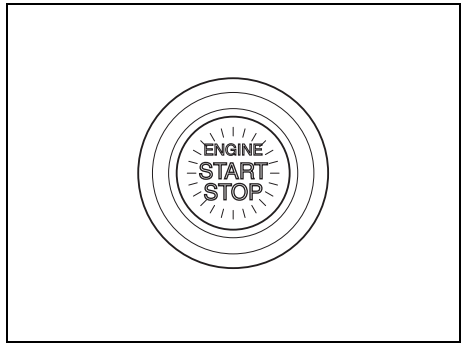

82K253

NOTE:
To save the battery, the illumination will be automatically turned off when both of the following conditions are simultaneously met:

- *The headlights and position lights are turned off.*
- *15 minutes has elapsed since opening the driver’s door.*

Selection of Ignition Modes

Press the engine switch to select “ACC” or “ON” mode as follows when you use an electric accessory or check the operation of instruments without running the engine.

1) Bring the keyless push start system remote controller with you and sit in the driver’s seat.
2) Manual transmission – Without depressing the clutch pedal, press the engine switch (1).

   Automatic transmission – Without depressing the brake pedal, press the engine switch (1).

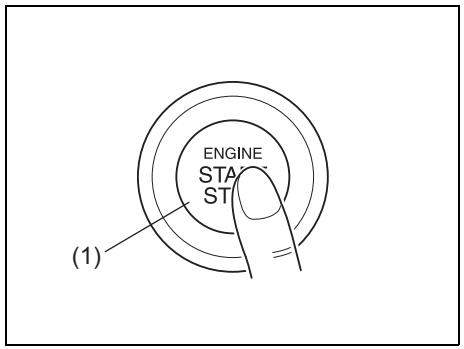

82K254

Every time you press the engine switch, the ignition mode changes as follows.

Manual Transmission

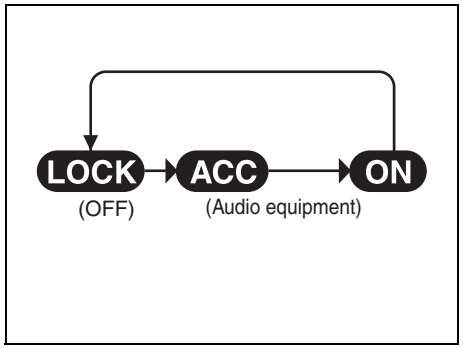

68PH00322

Automatic Transmission

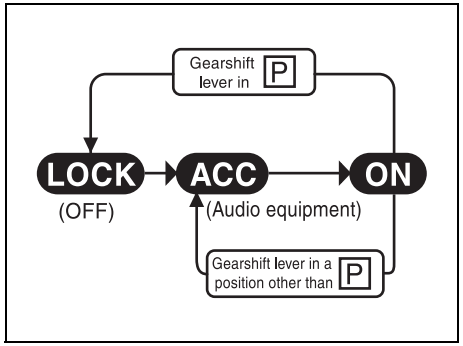

57L31006

NOTE:
- *Automatic transmission – If the gearshift lever is in any position other than “P”, or if the knob button is pushed when the gearshift lever is in P position, the ignition mode cannot be returned to “LOCK” (OFF).*

If the “PUSH” indicator light blinks and the ignition modes cannot be selected

Your keyless push start system remote controller may not be sensed as being within the “interior workable area” (refer to the related explanation in this section). Try again after making sure you have the remote controller with you. If the ignition modes still cannot be selected, the battery of the remote controller may be discharged. To be able to select an ignition mode, you must then use the following method:

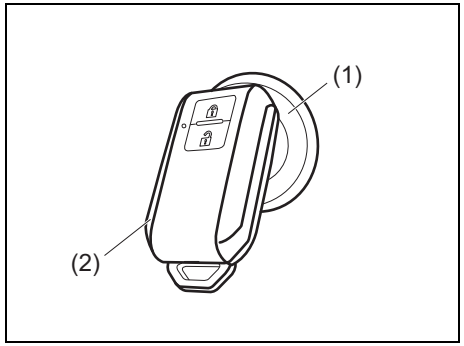

52RM30020

1) Without depressing the brake pedal and the clutch pedal, push the engine switch (1).
2) Within about 10 seconds during which the “PUSH” indicator light in the instrument cluster is blinking, touch the engine switch with the LOCK button end of the remote controller (2) for about 2 seconds.

NOTE:

- *If you still cannot select the ignition modes, there may be some problems with the keyless push start system. Contact a SUZUKI dealer or a qualified workshop for an inspection of the system.*
- *The immobilizer/keyless push start system warning light come on for about 5 seconds while the “PUSH” indicator light is blinking. Refer to “Warning and Indicator Lights” in “BEFORE DRIVING” section for details.*
- *You may customize the system to cause the interior buzzer to sound once for the “remote controller out of sensing range” warning. To incorporate this customization, please contact a a SUZUKI dealer or a qualified workshop.*
- *If the battery of the remote controller is about to become completely discharged, the corresponding message will appear in the information display when you press the engine switch to change the ignition mode to ON. For details on replacing the battery, refer to “Keyless push start system remote controller / keyless entry system transmitter (if equipped)” in “BEFORE DRIVING” section.*

“Remote Controller Outside” Warning

When either of the conditions described below is met, the system causes a “Remote Controller Outside” warning by sounding the interior and exterior buzzers. At the same time, the immobilizer/keyless push start system warning light blinks.

- Any door is opened and then closed while the remote controller is not inside the vehicle and the engine is running or the ignition mode has been changed to “ACC” or “ON” by pressing the engine switch.
- The remote controller is not inside the vehicle when you attempt to start the engine after changing the ignition mode to “ACC” or “ON” by pressing the engine switch.

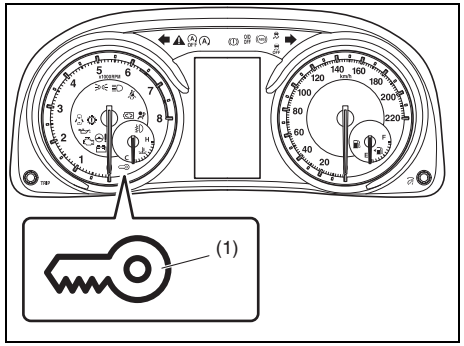

86T0101

(1) Immobilizer/keyless push start system warning light (blinks)

NOTE:
- *If the warning is given, relocate the remote controller as soon as possible.*
- *Any attempt to start the engine will fail while the warning is active. Blinking of the immobilizer/keyless push start system warning light in the instrument cluster will indicate this condition. Refer to "Warning and Indicator Lights" in "BEFORE DRIVING" section for details.*
- *Blinking of the immobilizer/keyless push start system warning light should stop shortly after the remote controller is brought back inside the vehicle. If the immobilizer/keyless push start system warning light does not stop blinking, change the ignition mode to "LOCK" (OFF) by pressing the engine switch and then perform the engine starting operation.*
- *Always keep the remote controller with you as the driver.*

Interior Workable Area for Engine Starting, Ignition Mode Selection and "Remote Controller Outside" Warning

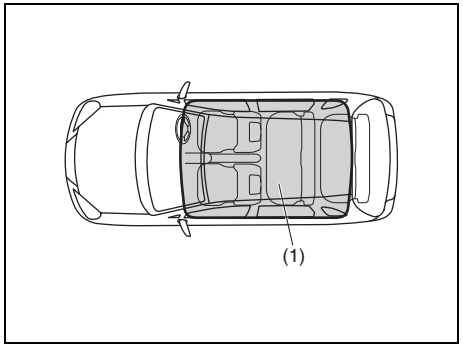

73R0198

(1) Interior workable area

The "interior workable area" for these functions is defined as all the interior spaces except for the space above the instrument panel.

NOTE:
- *Even when the remote controller is in the "interior workable area", if it is in any of the following conditions, you may not be able to start the engine or select the ignition modes, and the "remote controller outside" warning may be given.*
  - *–The remote controller's battery is low.*
  - *–The remote controller is affected by strong radio signals or noise.*
  - *–The remote controller is in contact with or covered by a metallic object.*
  - *–The remote controller is in stowage like the glove box or a door pocket.*
  - *–The remote controller is in the sun visor pocket or on the floor.*
- *Even when the remote controller is outside the "interior workable area", if it is in any of the following conditions, you may be able to start the engine or select the ignition mode. The "remote controller outside" warning may not be given at that time.*
  - *–The remote controller is outside the vehicle but very close to a door.*
  - *–The remote controller is on the instrument panel.*

Parking Brake Lever

EXAMPLE

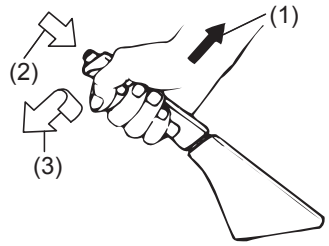

54G039

(1) To set
(2) To release
(3) To release

The parking brake lever is located between the front seats. To set the parking brake, depress the brake pedal and pull the parking brake lever all the way up. To release the parking brake, depress the brake pedal and pull up slightly on the parking brake lever, push the button on the end of the lever with your thumb, and lower the lever to its original position.

For automatic transmission vehicles, always set the parking brake before moving the gearshift lever to P (PARK) position. If you park on an incline and shift into "P" before setting the parking brake, the weight of the vehicle may make it difficult to shift out of "P" when you are ready to drive the vehicle.

When preparing to drive the vehicle, move the gearshift lever out of P position before releasing the parking brake.

⚠ WARNING

- **Never drive your vehicle with the parking brake on: rear brake effectiveness can be reduced from overheating, brake life may be shortened, or permanent brake damage may result.**
- **If the parking brake does not hold the vehicle securely or does not fully release, have your vehicle inspected immediately by a SUZUKI dealer or a qualified workshop.**
- **When parking on an uphill, turn the steering wheel so that the front wheels point to the center of the road.**
- **When parking on a downhill, turn the steering wheel so that the front wheels point to the curb.**

⚠ WARNING

Whenever parking, make sure the gearshift lever for manual transmission vehicles is in 1st gear or "R" (Reverse) and the gearshift lever for automatic transmission vehicles is in "P" (Park). Remember, even though the transmission is in gear or in Park, you must set the parking brake fully.

⚠ WARNING

When parking the vehicle in extremely cold weather, the following procedure should be used:

1) **Set the parking brake.**
2) **Manual Transmission - turn off the engine, then shift into reverse or first gear.**
   Automatic Transmission - shift into "P" (Park) and turn off the engine.
3) **Get out of the vehicle and put chocks under the wheels.**
4) **Release the parking brake.**
   When you return to your vehicle, you must remember to first set the parking brake, then remove the wheel chocks.

⚠ WARNING

Do not leave cigarette lighters, spray cans, soft drink cans or plastic articles (such as glasses, CD cases, etc.) in sun-heated vehicle. The temperature inside the vehicle may cause as follows:

- **Gas may leak from a cigarette lighter or spray can and may lead to a fire.**
- **The glasses, plastic cards or CD cases, etc. may deform or crack.**
- **Soft drink cans may fracture.**

Parking Brake Reminder Buzzer

A buzzer sounds intermittently to remind you to release the parking brake if you start the vehicle without fully releasing the parking brake. Make sure that the parking brake is fully released and the brake system warning light turns off.

Pedal

Manual Transmission

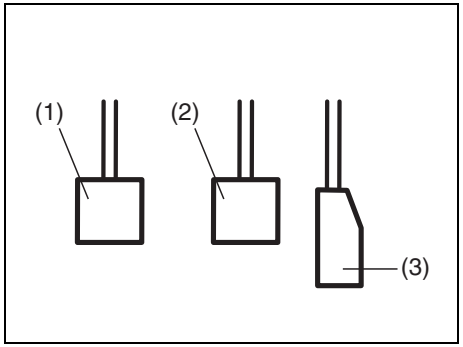

80J2121

Automatic Transmission

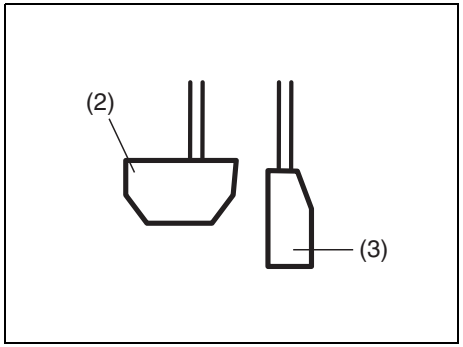

80J2122

Clutch Pedal (1) (for Manual Transmission)

A clutch pedal is used to disengage the driving force to the wheels when starting the engine, stopping, or shifting the gearshift lever. Depressing the pedal disengages the clutch.

⚠ WARNING

Do not drive with your foot resting on the clutch pedal. It could result in excessive clutch wear, clutch damage, or unexpected loss of engine braking.

Brake Pedal (2)

Your vehicle is equipped with front disc brakes and rear drum brakes. Depressing the brake pedal applies both sets of brakes.

You may hear occasional brake squeal when you apply the brakes. This is a normal condition caused by environmental factors such as temperature, humidity or dust, etc.

⚠ WARNING

If brake squeal is excessive and occurs each time the brakes are applied, you should have the brakes checked by a SUZUKI dealer or a qualified workshop.

⚠ WARNING

Do not apply brakes continuously or rest your foot on the brake pedal. This will result in overheating of the brakes which could cause unpredictable braking action, longer stopping distances, or permanent brake damage.

Accelerator Pedal (3)

An accelerator pedal controls the speed of the engine. Depressing the accelerator pedal increases power output and speed.

Starting / Stopping Engine (Vehicle without Keyless Push Start System) (if equipped)

Starting Engine

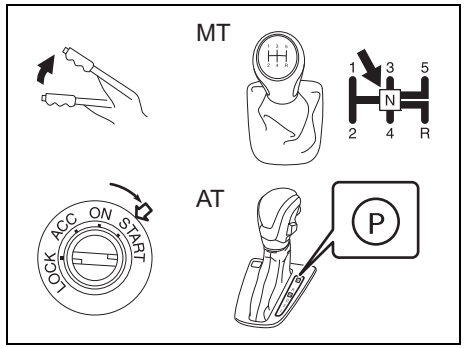

73R0013

1) Check that the parking brake is set fully.
2) Turn off such loads as the headlights and air conditioning system to facilitate starting of the engine.
3) Manual transmission vehicles:
   Shift into “N” (Neutral). Hold the clutch pedal and brake pedal fully depressed.
   Automatic transmission vehicles:
   If the gearshift lever is not in “P” (Park) position, shift into “P” (Park).

4) With your foot taken off the accelerator pedal, crank the engine by turning the ignition key to “START”. Release the key immediately after the engine has started.

NOTICE

- **Automatic transmission vehicles: In case that you need to restart the engine while the vehicle is moving, shift into “N”. Otherwise the engine and transmission can be damaged.**
- **For protection of a lead-acid battery and a starter motor, do not use the starter motor by turning the key to “START” for more than 12 seconds at a time. If the engine does not start, turn the key to “LOCK” position and wait for more than 30 seconds before trying again. If the engine does not start after several attempts, consult a SUZUKI dealer or a qualified workshop.**

NOTE:

- *Automatic transmission vehicles: Automatic transmission vehicles have a starter interlock device. The engine starts when the gearshift lever is in either “P” or “N” position.*
- *When you shift the gearshift lever into “P” and stop the engine before depressing the parking brake pedal, if you try to restart the engine and shift the gearshift lever into the position other than “P”, it may reduce gearshift lever capability, or unusual sound and shock may occur. However, this is not abnormal.*

Stopping Engine

NOTICE

Automatic transmission vehicles:
If you stop the engine while the vehicle is in motion, the automatic transmission may be damaged.
Avoid stopping the engine while driving.

Starting / Stopping Engine (Vehicle with Keyless Push Start System) (if equipped)

Starting Engine

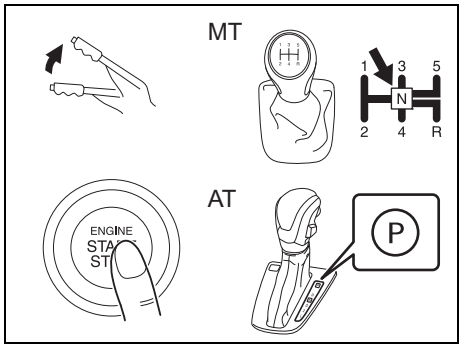

73R0067

1) Check that the parking brake is set fully.
2) Turn off such loads as the headlights and air conditioning system to facilitate starting of the engine.
3) Manual transmission vehicles:
   Shift into “N” (Neutral). Hold the clutch and brake pedals fully depressed.
   Automatic transmission vehicles:
   If the gearshift lever is not in “P” (Park) position, shift into “P” (Park). Hold the brake pedal fully depressed.

4) The “PUSH” indicator light in the instrument cluster will come on.

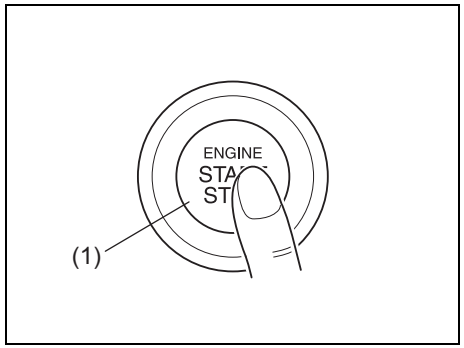

82K254

5) With your foot taken off the accelerator pedal, push the engine switch (1). When the engine is started, the starter motor will automatically stop.
   - Even if you fail to start the engine, the starter motor will stop turning automatically after approximately 12 seconds. In this case, press the engine switch to select LOCK (OFF) mode and restart the engine.
   - If there is a problem with the system, the engine will not start automatically even if the switch is pressed. In case the starter motor does not turn or stops immediately, start the engine by the following procedure.
     a. Press the engine switch to select the ON mode.
     b. Perform the above procedure 1) to 3).
     c. Keep the engine switch pressed until the engine starts. Release your finger from the engine switch after the engine has started.

NOTICE

If the engine does not start, press the engine switch to select LOCK (OFF) mode and wait for more than 30 seconds before trying again, for protection of a lead-acid battery and a starter motor. If the engine does not start after several attempts, consult a SUZUKI dealer or a qualified workshop.

NOTE:
- *You do not need to keep the engine switch pressed to start the engine.*
- *Manual transmission vehicles:*
  The engine of a manual transmission vehicle will not start unless the clutch pedal is depressed.
- *Automatic transmission vehicles:*
  Automatic transmission vehicles have a starter interlock device. The engine starts when the gearshift lever is in either “P” or “N” position.
- *When you shift the gearshift lever into “P” and stop the engine before depressing the parking brake pedal, if you try to restart the engine and shift the gearshift lever into the position other than “P”, it may reduce gearshift lever capability, or unusual sound and shock may occur. However, this is not abnormal.*

Stopping Engine

- Depress the engine switch to stop the engine after the vehicle stopped completely.
- If the engine remains stopped for while after it was stopped unexpectedly or was raced before stopping, a clicking sound may be heard from around the engine when it is restarted. This is not a malfunction. Always let the engine idle before stopping it.

NOTICE

Automatic transmission vehicles:
If you stop the engine while the vehicle is in motion, the automatic transmission may be damaged.
Avoid stopping the engine while driving.

Emergency Stop

In case of emergency, you can stop the engine by quickly pushing the engine switch more than 3 times, or pushing and holding the engine switch for more than 2 seconds while the vehicle in motion.

NOTE:
Except in cases of emergency, do not stop the engine while the vehicle is in motion. The steering and braking operation will require more effort when the engine is stopped.
Refer to "Braking" in this section.

Starting a Cold and Warm Engine

With your foot taken off the accelerator pedal, crank the engine by pressing the engine switch to change the ignition mode to "START".

NOTICE

Do not crank the engine for more than 12 seconds at a time.
If the engine does not start on the first try, wait about 30 seconds before trying again.

After pressing the engine switch to change the ignition mode to "START", the starter cranks the engine for about 12 seconds before it can start the engine. If the engine fails to start at the first attempt, wait about 30 seconds, and then try again while keeping the engine switch pressed while pressing down the accelerator pedal to 1/3 of its stroke. Release the accelerator pedal when the engine starts.

If the engine still does not start, try holding the accelerator pedal all the way to the floor while cranking.
If you are unable to start the engine using this procedure, consult a SUZUKI dealer or a qualified workshop.

If the “PUSH” Indicator Light Blinks and the Engine Cannot be Started

Your keyless push start system remote controller may not be sensed as being within the interior workable area. Try again after checking that you have the remote controller with you. If the engine still cannot be started, the battery of the remote controller may be discharged. To start the engine, use the following method:

EXAMPLE

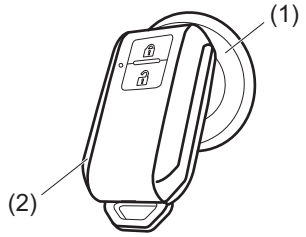

52RM30020

1) Check that the parking brake is set fully.
2) Manual transmission vehicles:
   Shift into “N” (Neutral). Hold the clutch and brake pedals fully depressed.
   Automatic transmission vehicles:
   If the gearshift lever is not in the “P” (Park) position, shift it to “P”. Hold the brake pedal fully depressed.
3) The “PUSH” indicator light in the instrument cluster will come on. Press the engine switch (1).
4) Within about 10 seconds of blinking of the “PUSH” indicator light in the instrument cluster, touch the engine switch with the LOCK button end of the remote controller (2) for about 2 seconds.

NOTE:

- *If you still cannot start the engine after several attempts using the above method, there may be a problem elsewhere, such as a low lead-acid battery. Consult a SUZUKI dealer or a qualified workshop for inspection.*
- *The immobilizer/keyless push start system warning light will come on for about 5 seconds while the “PUSH” indicator light is blinking.*
- *You may customize the system to cause the interior buzzer to sound once for warning that remote controller is out of sensing range. Please consult a SUZUKI dealer or a qualified workshop for the customization.*
- *If the battery of the remote controller is about to become completely discharged, the corresponding message will appear in the information display when you press the engine switch to change the ignition mode to ON. For details on replacing the battery, refer to “Keyless push start system remote controller / keyless entry system transmitter (if equipped)” in “BEFORE DRIVING” section.*

Returning the Ignition Mode to "LOCK" (OFF)

Automatic Transmission – To ensure safety, the ignition mode can be returned to "LOCK" (OFF) by pressing the engine switch only when the gearshift lever is placed in P position without pressing the knob button.

NOTE:
In the case of an automatic transmission model, the ignition mode cannot be returned to "LOCK" (OFF) mode if the gearshift lever is in any other position than "P".
Certain problems like a fault in engine system may prevent the engine switch from going back to "LOCK" (OFF) mode. If this happens, have the vehicle inspected by a SUZUKI dealer or a qualified workshop after doing the following:

- *Lock the doors using the key to prevent theft. (The request switches and the keyless push start system remote controller cannot be used to lock them.)*
- *Disconnect the negative cable from the battery to prevent discharge.*

"LOCK" (OFF) mode reminder buzzer
If the driver's door is opened without returning the ignition mode to "LOCK" (OFF) by pressing the engine switch, a buzzer sounds to warn you of this state.

- If you open the driver's door after pressing the engine switch to change the ignition mode to "ACC", the interior buzzer beeps intermittently.
- The buzzer will stop sounding if you then push the engine switch twice, thus bringing it back the ignition mode to "LOCK" (OFF).

NOTE:
Whenever you leave the vehicle, make sure you have returned the ignition mode to "LOCK" (OFF) using the engine switch and then lock the doors. Without returning the ignition mode to "LOCK" (OFF), you cannot use a request switch or keyless push start system remote controller to lock the doors.

Steering lock warning buzzer
If the steering lock fails to engage due to a fault in the system when the ignition mode is turned to "LOCK" (OFF) by pressing the engine switch and any door (including the tailgate) is opened or closed, the interior buzzer will warn you of this condition with repeated short beeps. If this happens, have the vehicle inspected by a SUZUKI dealer or a qualified workshop.

Using the Transmission

⚠ WARNING

Do not hang any items on the gearshift lever and do not use the gearshift lever as a handrest. Otherwise, it could prevent proper operation of the gearshift lever and cause its malfunction, resulting in an accident.

Manual Transmission

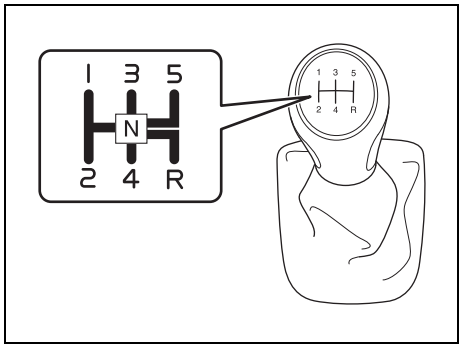

73R0014

Starting off
To start off, depress the clutch pedal all the way to the floor and shift into 1st gear. After releasing the parking brake, gradually release the clutch. When you hear a change in the engine's sound, slowly press the accelerator while continuing to gradually release the clutch.

Shifting
All forward gears are synchronized, which provides for quiet and easy shifting. Always depress the clutch pedal all the way to the floor before shifting gears. Keep the engine speed does not rise into the red zone of the tachometer.

NOTICE

If frequently driving at low speed using a high gear position, the life cycle of the clutch may be reduced.

Downshifting maximum allowable speeds (5MT)

Downshifting	km/h (mph)
2nd to 1st	20 (12)
3rd to 2nd	80 (49)
4th to 3rd	115 (71)
5th to 4th	155 (96)*

**NOTE:*
You may not accelerate to the maximum allowable speed because of the driving situation and/or the vehicle condition.

NOTICE

Do not downshift to a lower gear at the speed faster than the maximum allowable speeds for the next lower speed, or severe damage to engine and transmission can result.

⚠ WARNING

- **Reduce your speed and downshift to a lower gear before going down a long or steep hill. A lower gear will allow the engine to provide braking. Avoid riding the brakes or they may overheat, resulting in brake failure.**
- **When driving on slippery roads, slow down before downshifting. Excessive and/or sudden changes in engine speed may cause loss of traction, which could cause you to lose control.**

NOTICE

Make sure that the vehicle is completely stationary before you shift into reverse.

NOTICE

- **To help avoid clutch damage, do not use the clutch pedal as a footrest while driving or use the clutch to keep the vehicle stationary on a slope. Depress the clutch fully when shifting.**
- **When shifting or starting off, do not race the engine. Racing the engine can shorten engine life and cause negative effect to smooth shifting.**

4-Speed Automatic Transmission

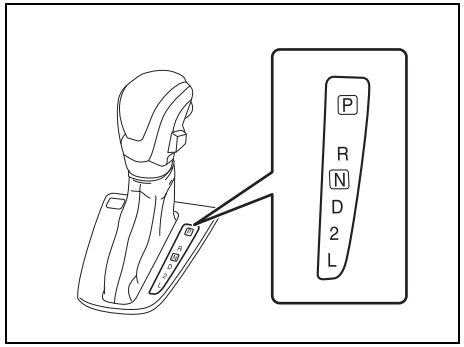

73R0068

(1) Overdrive off switch

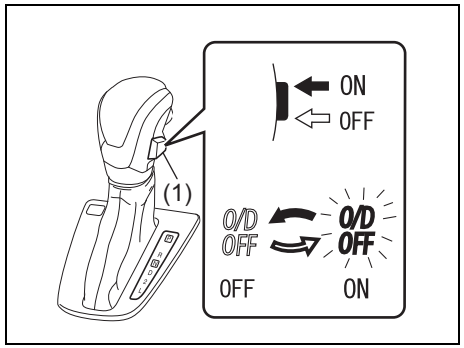

73R0072

Overdrive off switch

The transmission is a 4-speed (3-speed plus overdrive) automatic transmission. By operating the overdrive off switch, the transmission can be converted to a 3-speed automatic transmission that will not move to the overdrive position. To convert the transmission to the 3-speed mode, push in the overdrive off switch and release it.

To return the transmission to the 4-speed mode, push in the overdrive off switch again.

When the ignition switch is turned to ACC position or the engine switch is pressed to change the ignition mode to “ACC”, the transmission in the 3-speed mode is converted to the 4-speed mode automatically.

The 3-speed mode is suitable for the following driving conditions:

- Driving on hilly, winding roads
  - You can drive more smoothly with less frequent gear changing
- Going down a steep hill
  - Some engine braking is provided

Gearshift lever

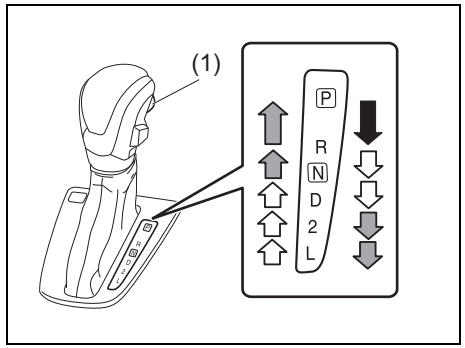

73R0069

(1) knob button

The gearshift lever is designed so that it cannot be shifted out of P position unless the ignition switch is in ON position or the ignition mode is “ON” and the brake pedal is depressed.

⚠ WARNING

Always depress the brake pedal before shifting from “P” (Park) (or “N” (Neutral) if the vehicle is stationary) to a forward or reverse gear, to help prevent the vehicle from moving unexpectedly when you shift.

The gearshift lever has a lock mechanism to help prevent accidental shifting. To shift the gearshift lever:

⇩	Shift with the knob button (1) pushed in and the brake pedal depressed.
⇧⇩	Shift with the knob button (1) pushed in.
⇧⇩	Shift without the knob button (1) pushed in.

⚠ CAUTION

- **For the vehicles with the keyless push start system, if you cannot press the engine switch firmly, the engine may not start.**
- **Even if you shift the gearshift lever into "R" or "D" position without the engine running, the vehicle does not move.**
- **If you try to move your vehicle under the above-mentioned condition, the vehicle may move in unexpected directions on a slope, etc. This may cause an accident. When starting the engine, press the engine switch firmly. Also, make sure that the engine is running by checking engine sound or warning and indicator lights.**

NOTE:

- *Always shift the gearshift lever without pushing in the knob button (1) except when you shift from "P" to "R", from "D" to "2", from "2" to "L", from "N" to "R" or from "R" to "P". If you always push in the knob button (1) when shifting the gearshift lever, you could shift into "P", "R", "2", or "L" by mistake.*
- *If driver's or passenger's knee hits the gearshift lever while driving, the lever could move and the gear could be changed unexpectedly.*

Use the gearshift lever positions as described below:

P (Park)
Use this position to lock the transmission when the vehicle is parked or when starting the engine. Shift into Park only when the vehicle is completely stationary.

R (Reverse)
Use this position to reverse the vehicle from stop. Make sure that vehicle is completely stationary before shifting into Reverse.

N (Neutral)
Use this position for starting the engine if the engine stalls and you need to restart it while the vehicle is moving. You may also shift into Neutral and depress the brake pedal to hold the vehicle stationary during idling.

D (Drive)
Use this position for all normal driving.

With the gearshift lever in "D" range you can get an automatic downshift by pressing the accelerator pedal. The higher the vehicle speed is, the more you need to press the accelerator pedal to get a downshift.

2 (Low 2)
Use this position to provide extra power when climbing hills, or to provide engine braking when going down hills.

L (Low 1)
Use this position to provide maximum power when climbing steep hills or driving through deep snow or mud, or to provide maximum engine braking when going down steep hills.

NOTE:
If you move the gearshift lever to a lower gear while driving faster than the maximum allowable speed for the lower gear, the transmission will not actually downshift until your speed drops below the maximum speed for the lower gear.

⚠ CAUTION

- **For the vehicles with the keyless push start system, if you cannot press the engine switch firmly, the engine may not start.**
- **Even if you shift the gearshift lever into "R" or "D" position without the engine running, the vehicle does not move.**
- **If you try to move your vehicle under the above-mentioned condition, the vehicle may move in unexpected directions on a slope, etc. This may cause an accident. When starting the engine, press the engine switch firmly. Also, make sure that the engine is running by checking engine sound or warning and indicator lights.**

NOTICE

- **Do not shift the gearshift lever into "R" while moving forward, or the transmission may be damaged. If you shift into "R" when the vehicle speed is over 11 km/h (7 mph), the transmission will not shift into reverse.**
- **Be sure to take the following precautions to help avoid damage to the automatic transmission:**
  - **Make sure that the vehicle is completely stationary before shifting into "P" or "R".**
  - **Do not shift from "P" or "N" to "R", "D", "2", or "L" when the engine is running above idle speed.**
  - **Do not rev the engine with the transmission in a drive position ("R", "D", "2", or "L") and the front wheels not moving.**
  - **Do not use the accelerator to hold the vehicle on a hill. Use the vehicle's brakes.**

If You Cannot Shift Automatic Transmission Gearshift Lever Out of "P" (PARK)

Left hand drive vehicle

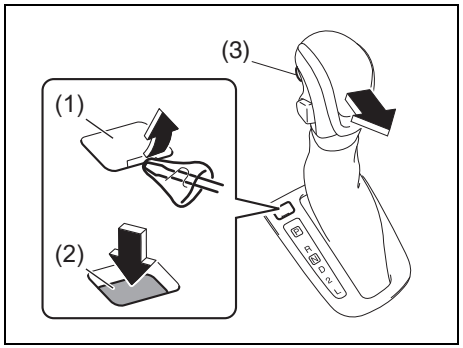

86T0100

Vehicles with an automatic transmission have an electrically operated park-lock feature. If the vehicle's battery is discharged, or there is some other electrical failure, the automatic transmission cannot be shifted out of Park in the normal way. Jump starting may correct the condition. If not, follow the procedure described below. This procedure will permit shifting the transmission out of Park.

1) Be sure the parking brake is firmly applied.
2) If the engine is running, stop the engine.
3) Make sure the key is in “ON” or “ACC” position, or the ignition mode is “ON” or “ACC”.
4) Remove the cover (1) over the button.
5) With the release button (2) pushed by the key or the flat end rod, push the knob button (3) and shift the gearshift lever to the desired position.

This procedure is for emergency use only. If repeated use of this procedure is necessary, or the procedure does not work as described, take the vehicle to a SUZUKI dealer or a qualified workshop for repair.

Right hand drive vehicle

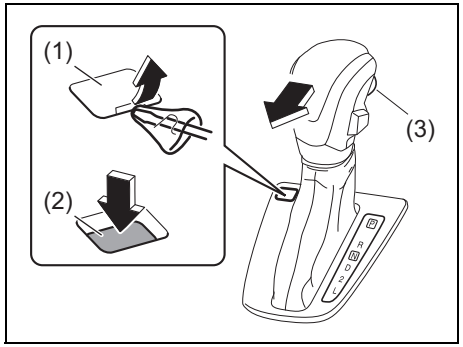

86T0035

Vehicles with an automatic transmission have an electrically operated park-lock feature. If the vehicle’s battery is discharged, or there is some other electrical failure, the automatic transmission cannot be shifted out of Park in the normal way. Jump starting may correct the condition. If not, follow the procedure described below. This procedure will permit shifting the transmission out of Park.

1) Be sure the parking brake is firmly applied.
2) If the engine is running, stop the engine.
3) Make sure the key is in ON or ACC position, or the ignition mode is “ON” or “ACC”.
4) Remove the cover (1) by using a flat-bladed screwdriver covered with a soft cloth as shown.
5) With the release button (2) pushed by key or the flat end rod, push the knob button (3) and shift the gearshift lever to the desired position.

This procedure is for emergency use only. If repeated use of this procedure is necessary, or the procedure does not work as described, take the vehicle to a SUZUKI dealer or a qualified workshop for repair.

Gearshift Indicator (if equipped)

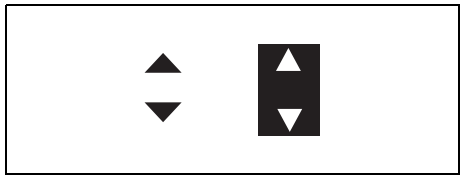

56RM03028

In the following case, the gearshift indicator is indicated in the information display when the ignition switch is in the “ON” position or the ignition mode is “ON”

- For manual transmission vehicle, when the gearshift lever is in a position other than “N” (Neutral).
- For vehicles equipped with the cruise control, when the system is not in use.

The electronic control system monitors driving condition (such as vehicle speed and/or engine revolution), and it shows which gear position is optimal for your driving with the indication on the display.

Manual transmission vehicle
If UP/DOWN arrow is indicated on the display while driving, we recommend you to shift up or down. It is the optimal gear position for a driving condition that reduces the over revolution and stress to the engine, and improves fuel consumption

For details on how to use the transmission, refer to “Using the Transmission” in this section.

⚠ WARNING

The gearshift indicator is designed to indicate optimal gear position for your driving, however, a driver will not be relieved from the duty of care of driving operation or gear change with this indicator.
To drive safe, do not gaze the gearshift indicator, pay attention to your driving situation and shift up or down if necessary.

NOTE:

- *The gearshift indicator is not indicated when the gear position is in “N” (Neutral).*
- *If you depress the clutch pedal while UP/DOWN arrow is indicated, the indication will disappear.*
- *In ordinary driving, UP arrow will disappear when you release your foot from the accelerator pedal.*
- *The indication of gearshift indicator timing may differ depending on the vehicle condition and/or driving situation even in the same vehicle speed and engine revolution.*
- *If any of the electrical systems such as ESP® system is working, the gearshift indicator will disappear temporarily.*

Example of the gearshift indicator

Indication	Description
	Lower gear position is selected for the vehicle speed and/or engine revolution. Changing to a higher gear position is recommended. • In this case, shifting UP is recommended.
	Higher gear position is selected for the vehicle speed and/or engine revolution. Changing to a lower gear position is recommended. • In this case, shifting DOWN is recommended.

Smart Hybrid

Smart Hybrid has an Integrated Starter Generator (ISG) instead of conventional generator to get a better fuel consumption.

Integrated Starter Generator (ISG) is a generator which incorporated a motor function.

The ISG has the following 3 functions.
- Deceleration energy regenerating function
- Engine power assist function
- Starter motor function

Deceleration Energy Regenerating Function

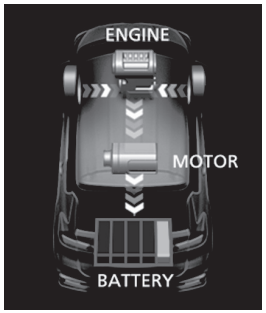

72R0096

While decelerating your vehicle, the ISG generates electricity without engine power. This reduces engine loads and improves fuel consumption.

While decelerating your vehicle, deceleration energy regenerating function will be activated when the following conditions are satisfied.

- Gearshift lever is not in “N” (Neutral).
- Clutch pedal is not depressed.
- Engine speed is more than 950 rpm.
- Inside temperature of lead-acid battery is in normal condition.
- Lithium-ion battery is not fully charged and inside temperature is in normal condition.

etc.

NOTE:
The deceleration energy regenerating function may not work depending on vehicle conditions.

Engine Power Assist Function

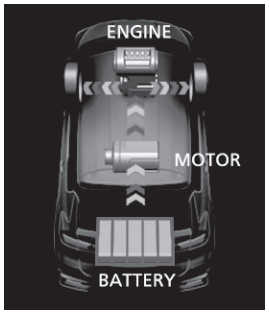

72R0097

While the vehicle is running, ISG assists engine power as a motor in the following limited condition. This reduces engine loads and improves fuel consumption.

While the vehicle is running with the engine speed at approximately 4000 rpm or less, engine power assist function will be activated when all of the following conditions are satisfied.

- Smart Hybrid system and ENG A-STOP system are working properly. (“ENG A-STOP OFF” indicator light is not blinking.)
- Clutch pedal is not depressed.
- ESP® (if equipped) is not activated.
- Accelerator pedal is excessively depressed.
- Lead-acid battery and lithium-ion battery are fully charged and each inside temperature is in normal condition.
- Engine coolant temperature is in normal condition.
- ISG inside temperature is in normal condition.

NOTE:
The engine power assist function may not work depending on vehicle conditions.

Starter Motor Function

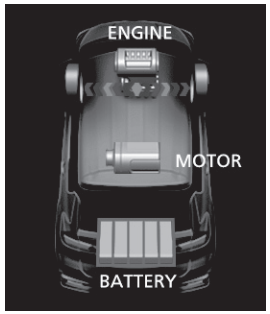

72R0098

After the engine auto stop by the ENG A-STOP system, the engine will be restarted using a cranking power of the ISG.

The starting with the ISG is quiet compared with starting by the conventional starter motor.

NOTE:
When you restart the engine by pushing the engine switch, the conventional starter motor is used and you will hear a gear engagement sound.

Lithium-ion Battery Indication



72R0099

The segments in the lithium-ion battery indicator (1) give an approximate indication of the charge of the lithium-ion battery. The number of segments that appear in the indication increases or decreases with the charge of the lithium-ion battery.

NOTE:
The indicator gives an approximate indication. The indication may be delayed or differ from the actual charge of the lithium-ion battery under certain conditions, for example, when the outside temperature is low.
Also, the minimum segment is 1 bar and the bar will never be 0. Even when 1 bar is shown, the battery level may be close to be flat.

ENG A-STOP OFF Light



52RM30460

If this indicator blinks when driving, there may be something wrong with the ENG A-STOP system or the Smart Hybrid system. You should have the system inspected by a SUZUKI dealer or a qualified workshop.

ENG A-STOP System (Engine Auto Stop Start System)

The ENG A-STOP system (engine auto stop start system) automatically stops the engine while waiting briefly at a traffic light, etc., and automatically restarts the engine afterward. This system helps reduce emissions, improve fuel consumption and lower engine noise.

This system stops the engine temporarily under specific conditions. Before parking the vehicle for an extended period of time or leaving the vehicle, properly apply the parking brake and stop the engine with the ignition switch or the engine switch.

Once the specific conditions are met, the engine will stop automatically after the vehicle has stopped. However, the engine will not be stopped automatically until confirmation of the system function is finished.

NOTE:
If your vehicle is equipped with the auto air conditioning system, you can change the automatic engine stop condition via the information display. Refer to "Information display" in "BEFORE DRIVING" section.

⚠ CAUTION

- **Do not get out of the vehicle while the engine is automatically stopped by the ENG A-STOP system. Doing so may lead to an accident.**
  - **– Manual transmission vehicle – If the driver's seat belt is unfastened or the driver's door is opened, the engine will restart.**
  - **– Automatic transmission vehicle – If the driver's seat belt is unfastened, even if the brake pedal is pressed down, or the driver's door is opened, the engine will be restarted to warn you that the engine was stopped automatically by the ENG A-STOP system.**
- **If the engine does not restart automatically after having been stopped automatically by the ENG A-STOP system, push the engine switch to start the engine. Trying to move the vehicle when the engine has not yet restarted requires a strong force to turn the steering wheel or depress the brake pedal, potentially leading to an accident.**

NOTICE

The vehicle equipped with this system uses a dedicated high-performance lead-acid battery that supports ENG A-STOP system. Accordingly, observe the instructions listed below. If these instructions are not observed, the system may not actuate properly or the lead-acid battery may die prematurely.

- **When replacing the lead-acid battery, use a SUZUKI GENUINE battery specified in the Specification.**
- **Do not draw power from the lead-acid battery terminals for electrical products.**

Lithium-ion Battery

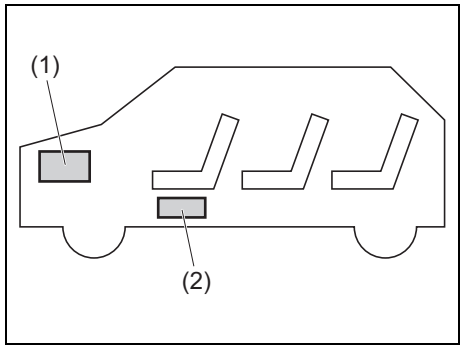

72R0100

(1) Battery (lead-acid battery)
(2) Lithium-ion battery

This lithium-ion battery is used exclusively for the vehicle equipped with ENG A-STOP system or Smart Hybrid, and located below the front left side seat.

- Just like a battery (lead-acid battery), the lithium-ion battery also discharges gradually. To prevent the lithium-ion battery from dying, you must charge the lithium-ion battery by driving continuously for at least 30 minutes once a month.
- The lithium-ion battery is maintenance-free.
- To replace or dispose of the lithium-ion battery, consult a SUZUKI dealer or a qualified workshop.

⚠ WARNING

Wrong handling of the lithium-ion battery may result in fire, electric shock or system malfunction. Accordingly, observe the instructions listed below:

- **Do not dismount or disassemble the lithium-ion battery.**
- **Do not let the lithium-ion battery come in contact with water or other liquids.**
- **Do not apply strong impact on the lithium-ion battery.**
- **Do not step on the lithium-ion battery or put articles on the lithium-ion battery.**
- **Do not disconnect the lithium-ion battery terminals or draw power from the terminals for electrical products.**

Automatic Stopping/Restarting of the Engine

Manual transmission vehicle

1) With the brake pedal depressed, decelerate the vehicle.

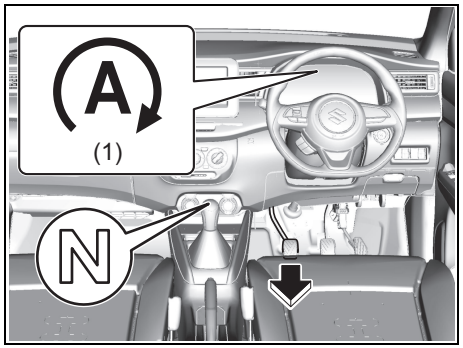

72R0101

2) After the vehicle has stopped with the clutch pedal depressed and the gear-shift lever shifted to “N”, and then release the clutch pedal, the engine will stop automatically.
   The ENG A-STOP indicator light (green) (1) will come on.
   - The ENG A-STOP system will not stop the engine automatically if all the automatic engine stop conditions are not met. For details, refer to the section, “Automatic engine stop conditions”.

- During the automatic engine stop, the engine may shut down, accompanied by an interior buzzer or restarted, to ensure safety.
  For details, refer to the section, “Points to note during the automatic engine stop”.

NOTICE
During the automatic engine stop, do not shift the gearshift lever to a position other than “N” without depressing the clutch pedal. If the gear shift lever is in a position other than “N”, the engine will not restart automatically even if the clutch pedal is depressed.

NOTE:
The ENG A-STOP system will not operate and engine does not stop automatically under the following conditions:
- *Engine auto stop function will be ready once the vehicle runs at a speed exceeding 3 km/h (2 mph) after restart of the engine.*
- *The audio and other electrical component can be used during the automatic engine stop, but the air conditioner will switch to the fan mode.*
- *If the vehicle is equipped with an auto air conditioner, the fan speed will be limited during the automatic engine stop (only in the auto control mode) to keep the cabin air-conditioned for a longer time.*

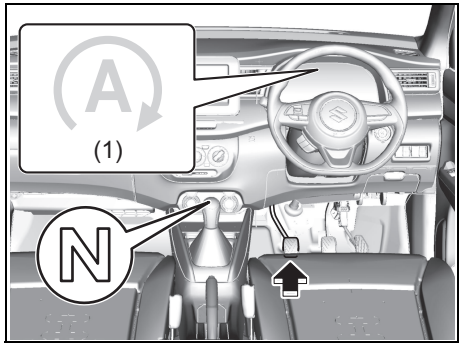

72R0102

3) Regardless of whether the vehicle has stopped or not, depressing the clutch pedal will restart the engine and ENG A-STOP indicator light (green) (1) will go off.

While the engine is stopped automatically, depressing the clutch pedal will restart the engine consuming fuel. Therefore, for fuel economy, it is recommended to depress the clutch pedal just before the vehicle start.
- Without depressing the clutch pedal, the engine may restart automatically if the automatic engine restart conditions are met.
  For details, refer to the section, “Automatic engine restart conditions”.

Automatic transmission vehicle
1) With the brake pedal depressed, decelerate the vehicle.

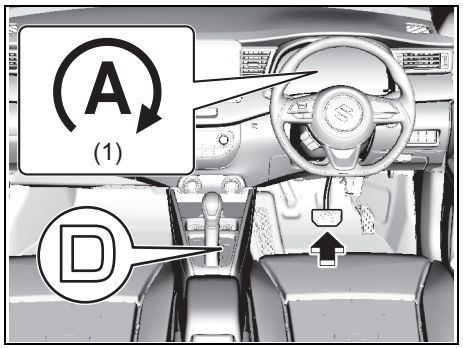

72R0146

2) While depressing the brake pedal, place the gearshift lever in “D” or “N” position.
   The ENG A-STOP indicator light (green) (1) will come on.
   - The ENG A-STOP system will not stop the engine automatically if all the automatic engine stop conditions are not met. For details, refer to the section, “Automatic engine stop conditions”.
   - During the automatic engine stop, the engine may shut down, accompanied by an interior buzzer or restarted, to ensure safety.
     For details, refer to the section, “Points to note during the automatic engine stop”.

NOTE:
The ENG A-STOP system will not operate and engine does not stop automatically under the following conditions:
- *Engine auto stop function will be ready once the vehicle runs at a speed exceeding 1 km/h (0.6 mph) after restart of the engine.*
- *The audio and other electrical component can be used during the automatic engine stop, but the air conditioner will switch to the fan mode.*
- *If the vehicle is equipped with an auto air conditioner, the fan speed will be limited during the automatic engine stop (only in the auto control mode) to keep the cabin air-conditioned for a longer time.*

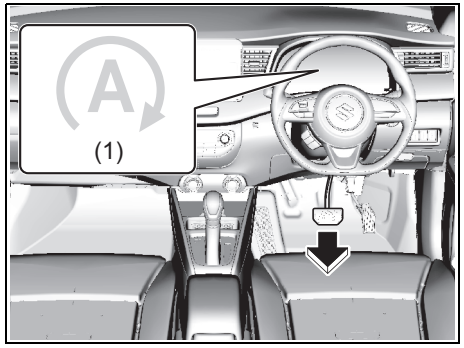

72R0147

3) Remove your foot from the brake pedal. "ENG A-STOP" indicator light (green) (1) in the instrument cluster will be turned off and the engine will restart automatically.

When restarting the engine, keeping brake force temporarily prevents the vehicle from moving forward by the creeping function. Also, this prevents the vehicle from rolling downward on a hill. For details, refer to the section "Hill hold control system".

NOTE:
When the engine is restarted automatically, the following conditions may be found as the hill hold control system is activated, but this is not a malfunction.
- *You may hear a sound from the engine room.*
- *As brake pedal becomes heavy, it may be difficult for you to depress it.*

Points to Note During the Automatic Engine Stop

When the following operations are performed during the automatic engine stop, the engine may shut down, accompanied by an interior buzzer or restarted, to ensure safety.
- When the hood is opened, an interior buzzer will sound intermittently and the engine will come out of the automatic engine stop mode and shut down. The ENG A-STOP indicator light (green) will go off.
- When the driver releases the seat belt or opens the driver's door, the engine will restart automatically. The ENG A-STOP indicator light (green) will blink for approximately 5 seconds and then go off.
- During the automatic engine stop, if the gearshift lever is shifted to a position other than "N" without depressing the clutch pedal and open the driver's door with the driver's seat belt unfastened, an interior buzzer will sound and the engine will shut down without control of automatic engine stop. The ENG A-STOP indicator light (green) will go off.

NOTE:
The power steering warning light, oil pressure warning light and charge warning light on the meter panel do not come on during the automatic engine stop, but they will come on once the engine shuts down.

Actuation Conditions for ENG A-STOP System

Standby conditions
When all of the following conditions are met while the vehicle is traveling, ENG A-STOP system will be permitted:
- The engine is started with the hood completely closed.
- The ENG A-STOP OFF switch has not been pressed to deactivate the ENG A-STOP system.
- The lead-acid battery and the lithium-ion battery are fully charged and the temperature inside the lead-acid battery or the lithium-ion battery is within the specified range (#1).
- The engine has warmed up and the engine coolant temperature is within the specified range.
- The driver is wearing seat belts.
- The driver's door is completely closed.
- The hood is completely closed.
- No electronically controlled system besides the ENG A-STOP system is issuing a signal to inhibit stopping of the engine (#2).

<Vehicle equipped with auto air conditioner>
- The temperatures at air-conditioner outlets are sufficiently low in the cooling mode or sufficiently high in the heating mode.
- The defroster is turned off.

#1 If the vehicle has not been in use for an extended period of time or the audio or other electrical component was used for an extended period of time while the engine was stopped, the lead-acid battery may have discharged and it may take some time before the standby mode is achieved.
#2 If any of the warning and indicator lights affecting the ENG A-STOP system come on, the engine will not be stopped automatically.

Automatic engine stop conditions
When all of the following conditions are met under the standby conditions, the engine will stop automatically after the vehicle has stopped:
- The gearshift lever is in "N" (Neutral) position (for manual transmission vehicle).
- The clutch pedal is released (for manual transmission vehicle).
- The vehicle has stopped.
- The accelerator pedal is not depressed.
- Neither the ABS nor ESP® is in operation.
- The negative pressure of the brake booster is normal.
- The vehicle is stopped on a steep hill (for automatic transmission vehicle).
- The gearshift lever is in a position other than "D" or "N" (for automatic transmission vehicle).
- When the vehicle has stopped without depressing the brake pedal (for automatic transmission vehicle).

Automatic engine restart conditions
If one of the following operations is performed or the vehicle enters one of the following modes during the automatic engine stop, the engine will restart automatically and the ENG A-STOP indicator light (green) will go off:

Common
- The clutch pedal is depressed.
- The ENG A-STOP OFF switch is pressed to deactivate the ENG A-STOP system.
- The lead-acid battery or the lithium-ion battery has discharged substantially (#).
- A malfunction of the system is detected (#).
- The negative pressure of the brake booster has dropped (#).

<Vehicle equipped with auto air conditioner>
- The temperatures at air conditioner outlets have changed considerably after the automatic engine stop to the point of affecting the cooling/heating performance (#).
- The temperature selector has been turned considerably to the COOL side in the cooling mode or to the HOT side in the heating mode (#).
- The defroster is turned on (#).

- The accelerator pedal depressed (for automatic transmission vehicle) (#).
- The gearshift lever is put in “P” or “R” (for automatic transmission vehicle) (#).
- After the gearshift lever is shifted to “N”, it is returned to “D” (for automatic transmission vehicle) (#).
- The driver releases the seat belt (#).
- The driver’s door is opened (#).
- The vehicle starts to move on a slope, etc. (#).
- Some time (3 minutes or so) has elapsed after the start of the automatic engine stop (#).

The ENG A-STOP indicator light (green) will blink and then go off.

ENG A-STOP OFF Switch

The ENG A-STOP system can be deactivated.

- To deactivate the system, press the ENG A-STOP OFF switch (1) to turn on ENG A-STOP OFF light (2).
- To activate the system once again, press the switch (1) again to turn off the indicator.
- Every time the engine is stopped manually, the system is enabled again and the ENG A-STOP OFF light (2) goes off.

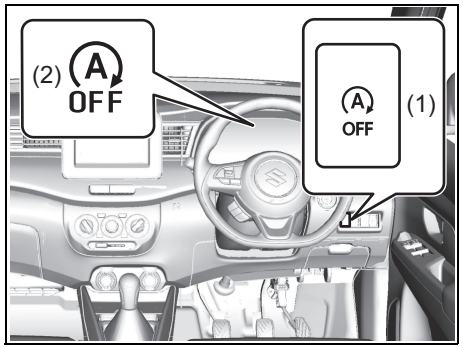

72R0104

NOTE:
Pressing the ENG A-STOP OFF switch (1) during the automatic engine stop will restart the engine automatically and the ENG A-STOP OFF light (2) will come on.

ENG A-STOP OFF Light



52RM30460

This indicator comes on in the information display.

- This indicator comes on when the ENG A-STOP system is deactivated.
- The indicator blinks when the engine switch is pressed to change the ignition mode to ON, if one of the conditions listed below is met.
  The ENG A-STOP system or the Smart Hybrid system does not actuate correctly while the indicator is blinking. Have the system inspected by a SUZUKI dealer or a qualified workshop.
  – There may be something wrong with the ENG A-STOP system or the Smart Hybrid system.
  – An engine component (ISG) or the lead-acid battery is due for replacement.

NOTE:
If the indicator blinks during the automatic engine stop, the engine may shut down.

Cruise control (if equipped)

The cruise control system allows you to maintain a steady speed without keeping your foot on the accelerator pedal. The controls for operating the cruise control system are on the steering wheel.

You can use the cruise control system under the following conditions:
- For manual transmission vehicle, the gear position is in 3rd, 4th, 5th.
- For automatic transmission vehicle, the gearshift lever is in “D” position.
- The vehicle speed is about 40 km/h (25 mph) or higher.

⚠ WARNING

To help avoid loss of vehicle control, do not use the cruise control system when driving in heavy traffic, on slippery or winding roads, or on steep downhills.

Setting cruising speed

Cruise control switch

EXAMPLE

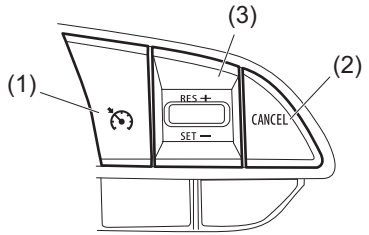

80SM302

(1) Cruise switch
(2) “CANCEL” switch
(3) “RES +/SET –” switch

EXAMPLE

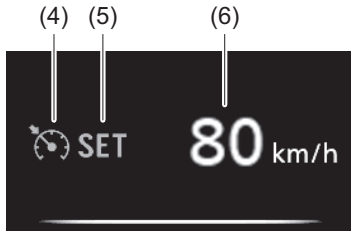

52RM30880

(4) Cruise indicator
(5) “SET” indicator
(6) Set speed indication

1) Turn on the cruise control system by pushing cruise switch (1). When the cruise indicator (4) appears on the information display, you can set cruising speed.
2) Accelerate or decelerate to the desired speed.
3) Push down the “RES +/SET –” switch (3), “SET” indicator (5) appears on the information display. At this time, set speed indication (6) also appears on the information display. Take your foot off the accelerator pedal and the set speed will be maintained.

⚠ WARNING

If the cruising speed is set by accident, you cannot decelerate or could loose control of the vehicle. This could lead to an accident, resulting in severe injury or death.
Turn off the cruise control system and check that cruise indicator (4) is off when the system is not in use.

NOTE:
Established cruising speed may differ a little from the speed meter indication depending on the road conditions.

Changing Speed Temporarily

When the cruising speed is maintained, you can temporarily accelerate or decelerate.

To accelerate, depress the accelerator pedal. When you take your foot off the pedal, your vehicle will return to the set speed.

To decelerate, depress the brake pedal. The set speed will be canceled and "SET" indicator (5) will disappear.
To resume the previously set speed, push up the "RES +/SET –" switch (3) and turn on "SET" indicator (5) again when vehicle speed is above 40 km/h (25 mph). The vehicle will accelerate to the previously set speed and maintain its speed.

Changing Cruising Speed

Using the accelerator pedal
To reset at a faster cruising speed, accelerate to the desired speed using the accelerator pedal and push down the "RES +/SET –" switch (3). The new speed will be maintained.

Using the brake pedal
To reset at a slower cruising speed, decelerate to the desired speed using the brake pedal and push down the "RES +/SET –" switch (3). The new speed will be maintained.

NOTE:
When the brake pedal is depressed, "SET" indicator (5) disappears until you reset the cruising speed.

Using "RES +/SET –" switch
To reset at a faster cruising speed, press repeatedly or hold push up the "RES +/SET –" switch (3). Vehicle speed will steadily increase. When you release the switch, the new speed will be maintained.

To reset at a slower cruising speed, press repeatedly or hold push down the "RES +/SET –" switch (3) until the vehicle has slowed to the desired speed, and then release the switch. The new speed will be maintained.

NOTE:
- *You can adjust the set speed by approximately 1 km/h (1 mph) by pushing "RES +/SET –" switch quickly.*
- *When the current vehicle speed is about 10 km/h or more faster than the previously set speed, the cruising speed cannot be decreased even if the "RES +/SET –" switch (3) is pushed down.*
- *When the current vehicle speed is about 10 km/h or more slower than the previously set speed, the cruising speed cannot be increased even if the "RES +/SET –" switch (3) is pushed up.*

Cancelling Cruise Control

"SET" indicator (5) will disappear and the cruise control will be canceled temporarily with the following conditions:

- Push "CANCEL" switch (2).
- Depress the brake pedal.
- For manual transmission vehicle, depress the clutch pedal.
- For automatic transmission vehicle, the gear position is changed to "L".
- The vehicle speed falls more than about 20 percent from the set speed.
- Any time the vehicle speed falls below 40 km/h (25 mph).
- When the vehicle skids and ESP® is activated.

To resume the previously set speed, push up the "RES +/SET –" switch (3) and turn on "SET" indicator (5). The vehicle speed must be above 40 km/h (25 mph) when the vehicle is not under the above conditions.

To turn off the cruise control system, push cruise switch (1) and check that the cruise indicator (4) is off.

Also, if the malfunction indicator light in the instrument cluster comes on or blinks, the cruise control system will be turned off.

NOTE:
If you turn off the cruise control system, the previously set speed in the memory is cleared. Reset your cruising speed again.

Parking Sensors

Parking Sensor System (if equipped)

The parking sensor system uses ultrasonic sensors to detect obstacles near the rear bumper. If obstacles are sensed while you are parking or moving the vehicle slowly, the system warns you by sounding a buzzer and displaying symbols representing the obstacles on the information display in the instrument cluster.

- The system emits an ultrasonic wave and the relevant sensor detects the return of the wave reflected by an obstacle. The system measures the time taken by the ultrasonic wave to reach the obstacle and return from it, from which it determines the obstacle's position.
- The parking sensor function can be used when the ignition switch is turned "ON" or the engine switch is pressed to change the ignition mode to "ON", the gearshift lever is in R position. This function is helpful in the following cases: pulling over to the curb; parallel-parking the vehicle; steering the vehicle into a garage; driving along an alley; and moving slowly in a place with obstacles.

Information Display Symbol



(1)

86T0005

(1) Symbol representing an obstacle detected by parking sensor*
* This symbol shows that an obstacle is located on the rear of vehicle.

⚠ WARNING

- **The parking sensor warns you of obstacles with buzzers and by showing you the location of the obstacles on the information display. However, you must still pay full attention yourself while driving.**
- **The sensors can detect obstacles only within a limited area and only when the vehicle is moving within a limited speed range. So, in tricky areas, you must move the vehicle slowly while checking around it using your direct vision or rearview mirrors. There is increased risk of an accident if you control the vehicle relying only on the parking sensor.**

Sensor Locations

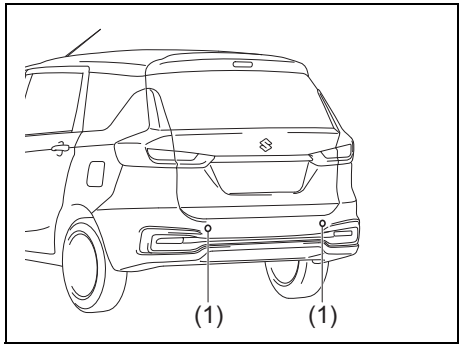

86T0025

(1) Rear center sensors (2 places)

NOTICE

- **Avoid hitting the sensor areas or directing the nozzle of a high-pressure car washer onto the sensor areas. Otherwise, the sensors may be damaged.**
- **If the bumper hits a hard object, the sensors on it may not work properly. If this occurs, have the sensors inspected by a SUZUKI dealer or a qualified workshop.**

Working sensors
The sensors work depending on the position of gearshift lever as shown in the below table:

Gearshift lever position		Manual Transmission		Automatic Transmission	
		R	N, 1st - 5th	R	N, D, 2 or L
Rear sensors	Center	On	Off	On	Off
	Corner	On	Off	On	Off

Approximate areas where obstacles can be detected

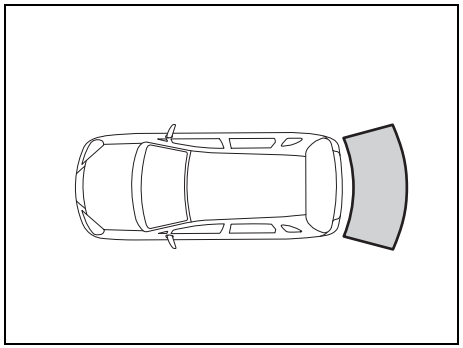

60MK070

- An obstacle within about 20 cm (8 in) from a sensor or just below a sensor is not detectable.
- The sensors can detect an obstacle up to about 1.5 m (5 ft) from the rear of vehicle.

⚠ WARNING

- **Under the following conditions, the parking sensor system may not work normally because the sensors cannot detect obstacles correctly.**
  - **– Sensors are covered with mud, ice or other materials. (Such materials must be removed for normal operation.)**
  - **– Sensors are wet from water splashes or heavy rain.**
  - **– Sensors are covered by a hand, sticker, accessory, etc.**
  - **– There is an accessory or other object attached within the sensor's sensing area.**
  - **– Items such as tow hooks, commercially available corner poles, radio antenna, etc. are installed on the bumper.**
  - **– The height of the bumper is changed due to alteration to the suspension or other causes.**
  - **– The sensor areas are extremely hot from direct sunlight or cold due to freezing weather.**
  - **– The vehicle is on a rough surface, slope, gravel road or grass field.**
  - **– The vehicle is at a steep angle.**

(Continued)

⚠ WARNING

(Continued)

- **– Sensors have intercepted ultrasonic noise from another vehicle's horn, engine, air braking system (large vehicles), or parking sensor.**
- **– Obstacles are too close to the sensors.**
- **– Sensors are at an angle to a highly reflective object such as glass. (Ultrasonic waves are not reflected back from the obstacle.)**

- **Sensors may not be able to correctly detect the following types of obstacles:**
  - **– Objects made of a thin material like wire netting and ropes**
  - **– Square-shaped curbstones or other objects with sharp edges**
  - **– Tall objects with a large upper part like a road sign**
  - **– Low-profile objects such as curbstones**
  - **– Sound-absorbing objects such as cotton and snow**

NOTE:

- *Thin poles or obstacles lower than the sensors may become undetectable as the vehicle moves closer to them even if they have been detected from longer distances.*
- *The system may calculate the distance to a road sign or similar obstacle to be shorter than the actual distance.*

Obstacle Indication by Parking Sensor

Information display symbol



(1)

86T0005

(1) Obstacle detected by rear center sensors

Upon detecting an obstacle, the parking sensor causes an interior buzzer to sound and a symbol representing the obstacle appears on the information display in the instrument cluster.

- A different symbol is displayed depending on the direction and distance of the obstacle.
- A buzzer located behind the rear seat sounds when a sensor at the rear detects an obstacle.
- Warnings when obstacles are detected by sensors

Distance (approx.)	Buzzer	Symbol
60 – 150 cm (24 – 59 in)	Short beeps at long intervals	Three lines
45 – 60 cm (18 – 24 in)	Short beeps at short intervals	
35 – 45 cm (14 – 18 in)	Short beeps at very short intervals	Two lines
Less than 35 cm (14 in)	Continuous beep	One line

NOTE:

- *Symbols are displayed with a short delay after the detection of obstacles.*
- *If the system detects multiple obstacles simultaneously, the display shows all of their positions using the corresponding symbols. However, the buzzers will sound only for the nearest obstacles.*

Set Sensors

You can select either the normal or trailer mode of the parking sensor via the information display. Refer to “Information display” in “BEFORE DRIVING” section.

Normal mode
All sensors operate. Use this mode under normal conditions.

Trailer mode
The rear corner and rear center sensors are inhibited from operating. Use this mode when towing a trailer.

NOTICE
Check that the normal mode is selected with the parking sensor when steering the vehicle into a garage. If the parking sensor is left in the trailer mode, the rear corner and rear center sensors are not functioning.

How to Use the Parking Sensor

Parking sensor switch

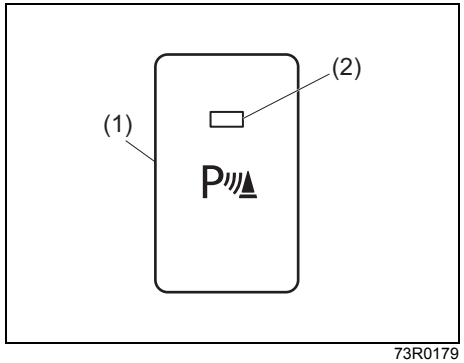

73R0179

(1) Parking sensor switch
(2) Indicator

- When the ignition switch is in ON position or the ignition mode is “ON”, and the indicator light in the parking sensor switch is on, indicating that the parking sensor is ready for operation under the following conditions:
  – The gearshift lever is in R position.
- To deactivate the parking sensor, push the parking sensor switch and make sure the indicator light goes off.

Switch position	State
	ON • When the indicator light is on and all necessary conditions are met, system becomes ready for operation.
	OFF • The system does not operate. Push the switch to turn off the indicator if you do not wish to use the parking sensor.

NOTE:
- *If you push the parking sensor switch from OFF to ON position when the ignition switch is in ON position or the ignition mode is “ON”, the inside buzzer sounds.*
- *When the gearshift lever is shifted to R position with the system ON, a buzzer will sound once.*

Obstacle Indication by Parking Sensor

Upon detecting an obstacle, the parking sensor causes an interior buzzer to sound.

- A buzzer located behind the rear seat sounds when a sensor at the rear detects an obstacle.
- Warnings when obstacles are detected by sensors

Distance (approx.)	Buzzer
100 – 150 cm (39 – 59 in)	Short beeps at short intervals
60 – 100 cm (24 – 39 in)	Short beeps at very short intervals
Less than 60 cm (24 in)	Continuous beep

Warning and Indicator Messages

If there is a problem or warning on the parking sensor system, the buzzer sounds intermittently. If the buzzer does not stop, there may be a problem with the parking sensor system. Have your vehicle inspected by a SUZUKI dealer or a qualified workshop.

- The buzzer sounds intermittently. The indicated sensor is contaminated. Wipe it clean with a soft cloth. If the buzzer does not stop after wiping, there may be problem with the parking sensor system. Have your vehicle inspected by a SUZUKI dealer or a qualified workshop.
- The indicator does not come on when the parking sensor switch is pressed. The indicator goes off while operating. There may be a problem with the parking sensor system, Have your vehicle inspected by a SUZUKI dealer or a qualified workshop.

Rearview Camera (if equipped)

When the gearshift lever is shifted to “R” position while the ignition mode is “ON”, the rearview camera system automatically shows the view behind the vehicle on the display.

⚠ WARNING

The distance viewed in the rearview camera may differ from the actual distance according to the condition of road or the load the vehicle is carrying. Since the camera display area is also limited, backing up by only looking at the display may cause an accident or a collision with an object. The rearview camera cannot replace the driver’s attention. The driver alone is responsible for parking and similar driving maneuvers.

- **Use the rearview camera only to provide driving assistance.**
- **Always drive carefully confirming the safety of the rear and the surrounding conditions by looking directly with your eyes and using the rear view mirror.**
- **Check that the tailgate is securely closed when backing up.**

NOTICE

If you use the rearview camera for a long time when the ignition mode is "ON", but the engine is not running, the lead-acid battery may discharge. Do not leave the ignition mode "ON" for a long time when the engine is not running.

Rearview Camera Location

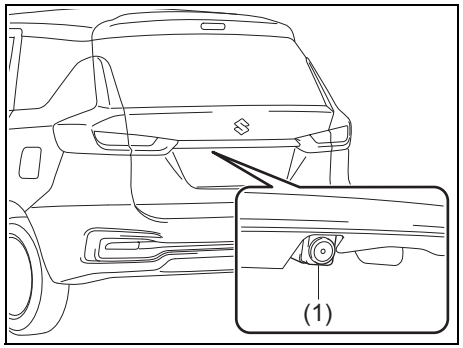

72R0038

(1) Rearview camera

The rearview camera is installed beside the license plate light.

NOTICE

The rearview camera is a precision instrument. If you strike the camera, it may be broken and cause damage resulting in a catch fire or a malfunction.
- **Do not strike the camera.**
- **Do not remove snow or mud on the camera lens with a stick.**

NOTICE

If water enters the rearview camera, it may cause a malfunction or catch fire.
Do not use high pressure water around the camera.

NOTICE

This lens is hard coated to prevent damage or discoloration. Damage or discoloration of lens may obscure the image.
- **Do not use a brush to clean lens.**
- **Do not use alcohol, benzene or thinner to clean the lens.**
- **Do not use wax on the camera lens.**

NOTE:
If body wax gets on the camera lens, wipe off the wax with a clean cloth dampened with mild detergent diluted with water, and then wipe the lens with a dry cloth.

How to Use Rearview Camera

1) Press the engine switch to change the ignition mode to “ON”.
2) Shift the gearshift lever in “R” position.
   - The display automatically shows the view behind the vehicle.
   - When the gearshift lever is shifted from “R” to another gearshift lever position, the display returns to the previous display.

NOTE:
The rearview camera display has first priority in any display mode. However, the rearview camera display does not show the rear view while the system is initializing.

Display Range of Rearview Camera

The rearview camera display shows the area behind the rear end of the tailgate. The display cannot show objects which are close to the bumper or under the bumper. The rearview camera display cannot show obstacles which are higher than the camera. Upper parts of tall objects such as road signs cannot be viewed on the display.

Display range of rearview camera

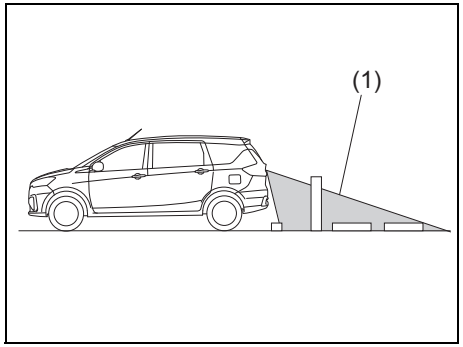

72R0039

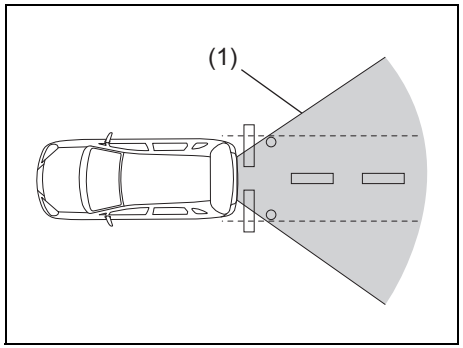

61MM0B012

(1) Display range

NOTE:
- *Images shown on the display from the rearview camera are reversed images (mirror images).*
- *The colors of objects on the rearview camera may differ from the actual object colors.*
- *The rearview camera display may be difficult to see under the following conditions, but this is not a system malfunction.*
  – In dark areas, on a rainy day or at night.
  – *When the temperature around the lens is too high/low, or the camera is wet such as on a rainy day or during periods of high humidity (dew condensation may occur on the camera lens).*
  – *When a foreign object such as mud or a drop of water is stuck around the camera lens.*
  – *When strong light directly enters the camera (vertical lines may be seen on the display).*
  – *Under fluorescent light. (The display may flicker.)*
  – *When the outside temperature is low (the image on the display may be darkened).*

Rearview camera screen indication
The distance viewed in the rearview camera may differ from the actual distance according to the condition of the road or the load the vehicle is carrying.

Uphill incline behind the vehicle

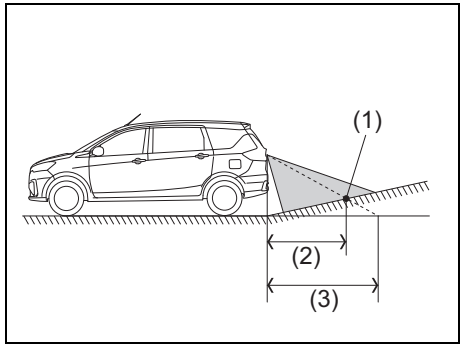

72R0040

(1) Object
(2) Actual distance
(3) Distance on the display

When there is an uphill incline behind the vehicle, the object shown on the display appears farther away than the actual distance.

Downhill incline behind the vehicle

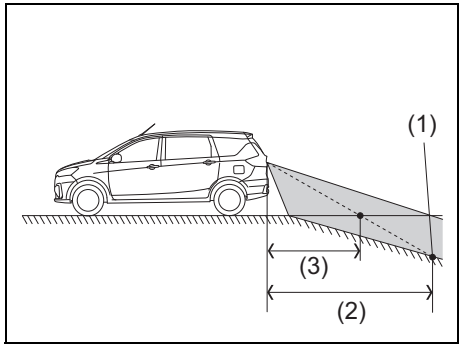

72R0041

(1) Object
(2) Actual distance
(3) Distance on the display

When there is a downhill incline behind the vehicle, the object shown on the display appears closer than the actual distance.

If the rear view from the rearview camera is not shown or there is a poor image

- If the rear view from the rearview camera is not shown.
  – Check that the ignition mode is “ON”.
  – Check that the gearshift lever is shifted to “R” position.
- If the image from the rearview camera is poor.
  – Check that the camera lens is not dirty.
  – Check that light from the sun or the beam of the headlights from the vehicle behind is not shining directly into the lens.

If the rearview camera system is still not working properly after checking the above, have the system inspected by a SUZUKI dealer or a qualified workshop as soon as possible.

Braking

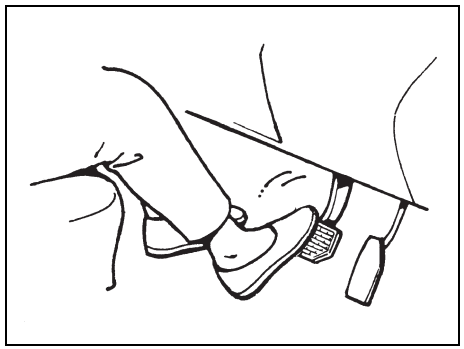

60G165S

The distance needed to bring any vehicle to a halt increases with the speed of the vehicle. The braking distance needed, for example, at 60 km/h (37 mph) will be approximately 4 times greater than the braking distance needed at 30 km/h (19 mph). Start to depress the brake pedal when there is plenty of distance between your vehicle and the stopping point, and slow down gradually.

⚠ WARNING

If water gets into the brake devices, brake performance may become poor and unpredictable. After driving through water or washing the underside of the vehicle, test the brakes while driving at a slow speed to see if they have maintained their normal effectiveness. If the brakes are less effective than normal, dry them by repeatedly applying the brakes while driving slowly until the brakes have regained their normal effectiveness.

Power-assisted Brakes

Your vehicle has power-assisted brakes. If power assistance is lost due to a stalled engine or other failures, the system is still fully operational on reserve power and you can bring the vehicle to a complete stop by pressing the brake pedal once and holding it down. The reserve power is partly used up when you depress the brake pedal and reduces each time the pedal is pressed. Apply smooth and even pressure to the pedal. Do not pump the pedal.

⚠ WARNING

Even without reserve power in the brake system, you can still stop the vehicle by pressing the brake pedal harder than normally required. However, the stopping distance may be longer.

Brake Assist System

When you slam the brakes on, the brake assist system determines it to be an emergency stop and provides more powerful braking for a driver who cannot hold down the brake pedal firmly.

NOTE:
If you quickly and forcefully depress the brakes, you may hear a clicking sound in the brake pedal. This is normal and indicates that the brake assist system is activated properly.

Anti-Lock Brake System (ABS)

ABS will help you avoid skidding by electronically controlling braking pressure. It will also help you maintain steering control when braking on slippery surfaces or when braking hard.
The ABS works automatically, so you do not need any special braking technique. Just push the brake pedal down without pumping. The ABS will operate whenever it senses that the wheels are locking up. You may feel the brake pedal moves a little while the ABS is operating.

NOTE:
- *The ABS will not work if vehicle speed is under about 9 km/h (6mph).*
- *If the ABS system is activated, you may hear a clunking noise and/or feel pulsating in the brake pedal. This is normal and indicates that the brake fluid pressure is being controlled properly.*
- *You may hear an operation sound when you start the engine or after the vehicle begins to move. This means that the above systems are in the self-check mode. This sound does not indicate a malfunction.*

⚠ WARNING

- **On some types of loose surfaces (such as gravel, snow-covered roads, etc.), the stopping distance required for a vehicle with ABS may be slightly greater than the one required for a comparable vehicle with a conventional brake system. With a conventional brake system, skidding tyres are able to plow the gravel or snow layer, shortening the stopping distance. ABS minimizes this resistance effect. Allow for extra stopping distance when driving on loose surfaces.**
- **On regular paved roads, some drivers may be able to obtain slightly shorter stopping distances with conventional brake systems than with ABS.**

(Continued)

⚠ WARNING

(Continued)
- **In both of the above conditions, ABS will still offer the advantage of helping you maintain directional control. However, remember that ABS will not compensate for bad road or weather conditions or poor driver judgment. Use good judgment and do not drive too fast.**

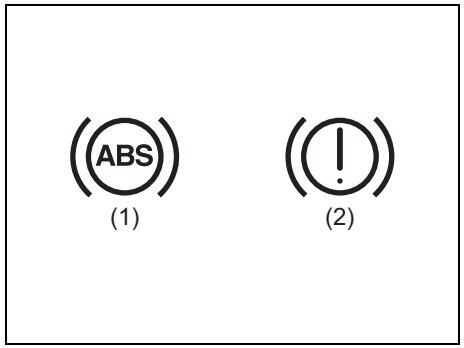

54MN069

(1) ABS warning light
(2) Brake system warning light

⚠ WARNING

- **If the ABS warning light (1) on the instrument panel comes on and stays on while driving, there may be a problem with the ABS system. Ask a SUZUKI dealer or a qualified workshop to inspect the ABS system immediately. If the ABS system becomes inoperative, the brake system will function as an ordinary brake system that has no ABS.**
- **If the ABS warning light (1) and the Brake system warning light (2) on the instrument panel simultaneously stays on or comes on while driving, both anti-lock function and rear brake force control function (proportioning valve function) of the ABS system may have failed. If so, the rear wheels may easily skid or the vehicle can even spin in the worst case when braking on a slippery road or when hard braking even on a dry paved road. Ask a SUZUKI dealer or a qualified workshop to inspect the ABS system immediately. Drive carefully, avoiding hard braking as much as possible.**

How the ABS Works

A computer continuously monitors wheel speed. The computer compares the changes in wheel speed when braking. If the wheels slow suddenly, indicating a skidding situation, the computer will change braking pressure several times each second to prevent the wheels from locking. When you start your vehicle or when you accelerate after a hard stop, you may hear a momentary motor or clicking noise as the system resets or checks itself.

⚠ WARNING

The ABS may not work properly if tyres or wheels other than those specified in the owner's manual are used. This is because the ABS works by comparing changes in wheel speed. When replacing tyres or wheels, use only the size and type specified in this owner's manual.

Electronic Stability Program (ESP®) (if equipped)

ESP® is a registered trademark of Daimler AG.

The Electronic Stability Program (ESP®) helps to control the vehicle during cornering if front wheels or rear wheels skid. It also assists you in maintaining traction while accelerating on loose or slippery road surfaces. It does this by regulating the engine's output, and by selectively applying the brakes. In addition, ESP® helps to avoid skidding by controlling braking pressure.

⚠ WARNING

The ESP® cannot enhance the vehicle's driving stability in all situations and does not control your vehicle's entire braking system. The ESP® cannot prevent accidents, including those resulting from excessive speed in turns, or hydroplaning. Only safe and attentive drive can prevent accidents. The capabilities of an ESP®-equipped vehicle must never be used as a substitute for careful driving.

The ESP® totally manages following four systems, (stability control, traction control, ABS and Brake assist) to help enhance vehicle stability in response to various driving conditions;

Stability Control System

The vehicle stability control system helps provide integrated control of systems such as anti-lock brakes, traction control, engine control, etc. This system automatically controls the brakes and engine to help prevent the vehicle from skidding when cornering on a slippery road surface or when turning the steering wheel abruptly.

Traction Control System

The traction control system automatically helps prevent the spinning of wheels when the vehicle is started or accelerated on slippery road surfaces. The system operates only if it senses that some of the wheels are spinning or beginning to lose traction. When this happens, the system operates the front or rear brakes and reduces engine power to limit wheel spin.

NOTE:
You may hear an operation sound when you start the engine or after the vehicle begins to move. This means that the above systems are in the self-check mode. This sound does not indicate a malfunction.

Anti-Lock Brake System (ABS)

ABS will help you avoid skidding by electronically controlling braking pressure. It will also help you maintain steering control when braking on slippery surfaces or when braking hard. The ABS works automatically, so you do not have to use any special braking technique. Just push the brake pedal down without pumping. The ABS will operate whenever it senses that wheels are locking up. You may feel the brake pedal pulsate while the ABS is operating.
(For more information on ABS, see “Braking” in this section.)

NOTE:
The ABS will not work if vehicle speed is under about 9 km/h (6 mph).

⚠ WARNING

- **The ESP® may not work properly if tyres or wheels other than those specified in the owner’s manual are used. When replacing tyres or wheels, use only the size and type specified in this owner’s manual.**
- **The ESP® may not work properly if tyres are not inflated to the recommended tyre pressure.**
- **The ESP® may not work properly if tyres are fitted with snow chains.**
- **The ESP® may not work properly if the tyres are excessively worn. Replace tyres when the tread wear indicators in the grooves appear on the tread surface.**
- **The ESP® is not a substitute for winter tyres or snow chains on a snow-covered road.**

⚠ WARNING

- **The ESP® may not work properly if engine related parts such as the muffler are not equivalent to standard equipment or are extremely deteriorated.**
- **Do not modify the vehicle’s suspension since the ESP® may not work properly.**

NOTE:
- *If the ESP® system is activated, you may hear a clunking noise and/or feel pulsating in the brake pedal. This is normal and indicates that the brake fluid pressure is being controlled properly.*
- *You may hear an operation sound when you start the engine or after the vehicle begins to move. This means that the above systems are in the self-check mode. This sound does not indicate a malfunction.*

The ESP® indicator lights are described below:

ESP® Warning Light



52KM133

This light blinks 5 times per second when one of the following systems is activated.
- Stability control system
- Traction control system

If this light blinks, drive carefully.

When the ignition switch is turned “ON” or pushed to “ON” mode, this light comes on briefly so you can check that the light is working.

NOTICE
If the ESP® warning light comes on and stays on while driving, there may be a malfunction of the ESP® systems (other than ABS). You should have the systems inspected by a SUZUKI dealer or a qualified workshop.

NOTE:
When the ESP® warning light comes on and stays on while driving, indicating a malfunction of the ESP® systems (other than ABS), the brake system will function as an ordinary ABS with no additional ESP® functions.

ESP® OFF Indicator Light



73R0196

You should turn the ESP® on during your ordinary driving, so that you have the benefits of all of the ESP® systems.

It may be required to turn the ESP® systems (other than ABS) off if your vehicle is stuck in sand, mud, or snow, where wheel spin is necessary.

ESP® OFF Switch

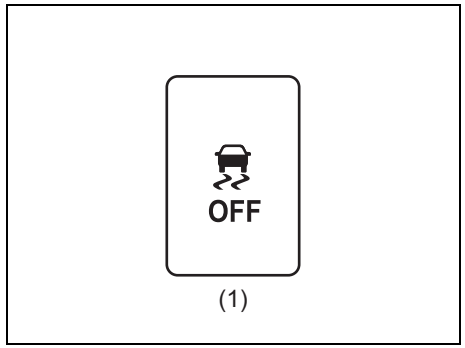

75RM055

(1) ESP® OFF switch

When the ESP® OFF switch located at the instrument panel is pushed and held to turn off the ESP® systems (other than ABS), the ESP® OFF indicator light in the instrument cluster comes on.
When you have turned the ESP® systems (other than ABS) off, turn them back on before resuming ordinary driving.
When you push the ESP® OFF switch again, the ESP® OFF indicator light will go out and all of the ESP® systems will be activated.

ABS Warning Light / Brake System Warning Light

See “Braking” in this section.

Hill Hold Control System (if equipped)

The hill hold control system is designed to assist you in starting to move up hills. When you start to move up a hill, the system helps to prevent the vehicle from rolling downward (for approximately 2 seconds) while you move your foot from the brake pedal to the accelerator pedal.

⚠ WARNING

- **Do not rely excessively on the hill hold control system. The hill hold control system may not prevent the vehicle from rolling downward on a hill under all load or road conditions. Always be prepared to depress the brake pedal to prevent the vehicle from rolling downward. Failure to pay attention and depress the brake pedal to hold the vehicle on a hill when necessary, may result in loss of control or an accident.**
- **The hill hold control system is not designed to stop the vehicle on a hill.**
- **After you release your foot from the brake pedal, accelerate the vehicle to move up immediately. If you release your foot from the brake pedal over 2 seconds, the hill hold control system will be canceled. If so, the vehicle may roll downward, which can result in an accident depending on the degree of slope. And, the engine may stall and the power assist for the steering and brakes will not work so steering and braking will be much harder than usual which can result in an accident or vehicle damage.**

The hill hold control system activates for a maximum of about 2 seconds if your foot is moved from the brake pedal when the following conditions are all met.

1) The gearshift lever is in a forward gear or reverse gear.
2) The parking brake is released.
3) The vehicle is on an upward incline.

NOTE:
When the hill hold control system is activated, the following conditions may be found, but this is not a malfunction.

- *You may hear a sound from the engine room.*
- *As brake pedal becomes heavy, it may be difficult for you to depress it.*

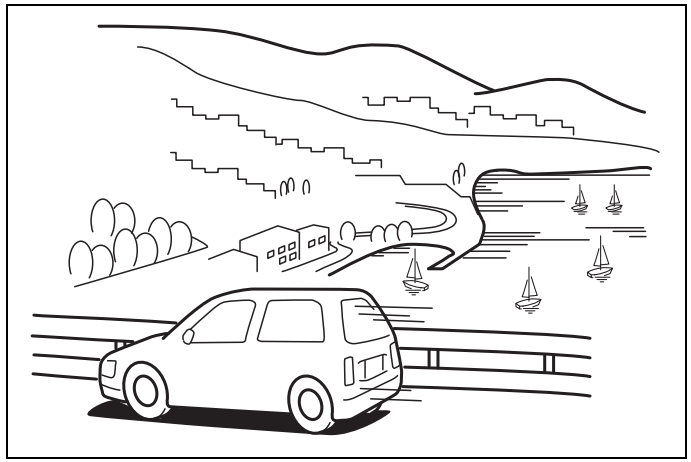

60G409

DRIVING TIPS

Running-in 4-1
Catalytic Converter 4-1
Improving Fuel Economy 4-2
Highway Driving 4-3
Driving on Hills 4-3
Driving on Slippery Roads 4-4
Off-road Driving 4-6
When Encountering a Flooded Area 4-6

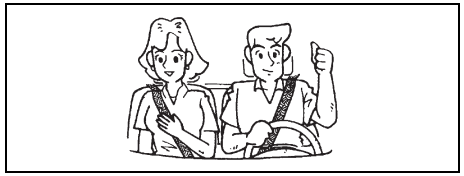

52D078S

⚠ WARNING

- **Fasten Your Seat Belts at All Times. Even though airbags are equipped at the front seating positions, the driver and all passengers should be properly restrained at all times, using the seat belts provided. Refer to "Seat Belts and Child Restraint Systems" section for instructions on proper use of the seat belts.**
- **Never drive while under the influence of alcohol or other drugs. Alcohol and drugs can seriously impair your ability to drive safely, greatly increasing the risk of injury to yourself and others. You should also avoid driving when you are tired, sick, irritated, or under stress.**

Running-in

NOTICE

The future performance and reliability of the engine depends on the care and restraint exercised during its early life. It is especially important to observe the following precautions during the first 960 km (600 miles) of vehicle operation.

- **After starting, do not race the engine. Warm it up gradually.**
- **Avoid prolonged vehicle operation at a constant speed. Moving parts will break in better if you vary your speed.**
- **Start off from a stop slowly. Avoid full throttle starts.**
- **Avoid hard braking, especially during the first 320 km (200 miles) of driving.**
- **Do not drive slowly with the transmission in a high gear.**
- **Drive the vehicle at moderate engine speeds.**

Catalytic Converter

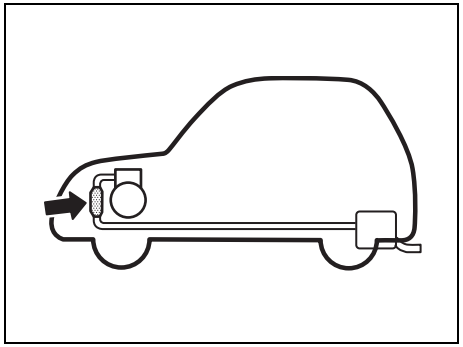

80G106

The purpose of the catalytic converter is to minimize the amount of harmful pollutants in your vehicle's exhaust. Use of leaded fuel in vehicles equipped with catalytic converters is prohibited, because lead deactivates the pollutant-reducing components of the catalyst system.

The converter is designed to last the life of the vehicle under normal usage and when unleaded fuel is used. No special maintenance is required on the converter. However, it is very important to keep the engine properly tuned. Engine misfiring, which can result from an improperly tuned engine, may cause overheating of the catalytic converter. This may result in permanent

heat damage to the catalytic converter and other vehicle components.

NOTICE

To minimize the possibility of catalytic converter or other vehicle damage:

- **Maintain the engine in the proper operating condition.**
- **In the event of an engine malfunction, particularly one involving engine misfiring or other apparent loss of performance, have the vehicle serviced promptly.**
- **Do not turn off the engine or interrupt the ignition when the transmission is in gear and the vehicle is in motion.**
- **Do not try to start the engine by pushing or towing the vehicle, or coasting down a hill.**
- **Do not idle the engine with any spark plug wires disconnected or removed, such as during diagnostic testing.**
- **Do not idle the vehicle for prolonged periods if idling seems rough or there are other malfunctions.**
- **Do not allow the fuel tank to get near the empty level.**
- **Avoid driving your vehicle at excessively high engine speed in or around the red zone of the tachometer.**

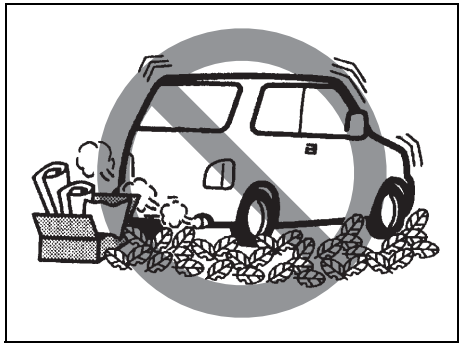

54G584S

⚠ WARNING

Be careful where you park and drive; the catalytic converter and other exhaust components can get very hot. As with any vehicle, do not park or operate this vehicle in areas where combustible materials such as dry grass or leaves can come in contact with a hot exhaust system.

Improving Fuel Economy

The following instructions will help you improve fuel economy.

Avoid excessive idling
If you park your vehicle for more than one minute, stop the engine and start it again later. When warming up a cold engine, do not allow the engine to idle or apply full throttle until the engine has reached operating temperature. Allow the engine to warm up by driving.

Avoid “fast” starts
Fast starts away from lights or stop signs will consume fuel unnecessarily and shorten engine life. Start off slowly.

Avoid unnecessary stops
Avoid unnecessary deceleration and stopping. Try to maintain a moderate, steady speed whenever possible. Slowing down and then accelerating again uses more fuel.

Keep a steady cruising speed
Drive at a constant speed that road and traffic conditions will permit.

Keep the air cleaner clean

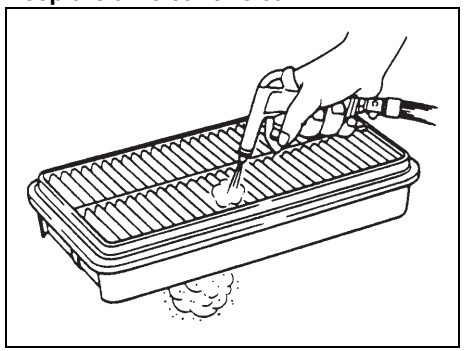

60A183S

If the air cleaner is clogged with dust, there will be greater intake resistance, resulting in decreased power output and increased fuel consumption.

Keep weight to a minimum

The heavier the load is, the more fuel the vehicle consumes. Unload any unnecessary luggage or cargo.

Keep tyre pressures correct

Under-inflation of the tyres can waste fuel due to increased rolling resistance of the tyres. Keep your tyres inflated to the correct pressure shown in the label on driver's door lock pillar.

Highway Driving

When driving at highway speeds, pay attention to the following:

- Stopping distance progressively increases with vehicle speed. Apply the brakes far enough ahead of the stopping point to allow for the extra stopping distance.
- On rainy days, hydroplaning can occur. Hydroplaning is the loss of direct contact between the road surface and the vehicle's tyres due to a water film forming between them. Steering or braking the vehicle during hydroplaning can be very difficult, and loss of control can occur. Keep speed down when the road surface is wet.
- At high speeds, the vehicle may be affected by side winds. Therefore, reduce speed and be prepared for unexpected buffeting, which can occur at the exits of tunnels, when passing by a cut of a hill, or when being overtaken by large vehicles, etc.

Driving on Hills

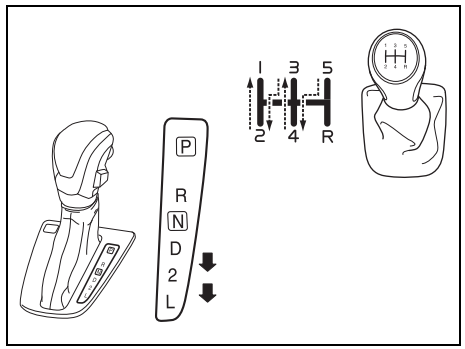

73R0015

- When climbing steep hills, the vehicle may begin to slow down and show a lack of power. If this happens, you should shift to a lower gear so that the engine will again be operating in its higher power range. Shift rapidly to prevent the vehicle from losing momentum.
- When driving down a hill, the engine should be used for braking by shifting to the next lower gear.

⚠ WARNING

Do not hold the brake pedal down too long or too often while going down a steep or long hill. This could cause the brakes to overheat, resulting in reduced braking efficiency. Failure to take this precaution could result in loss of vehicle control.

NOTICE

When descending a downhill, Never turn the ignition key to "LOCK" position or press the engine switch to change the ignition mode to "LOCK" (OFF). Emission control system and automatic transmission (if equipped) damage may result.

Driving on Slippery Roads

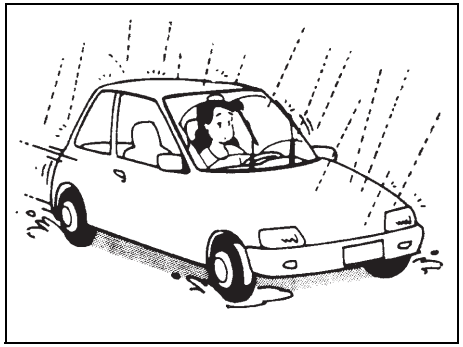

60G089S

On wet roads, you should drive at a lower speed than you do on dry roads due to possible slippage of tyres during braking. When driving on icy, snow-covered, or muddy roads, reduce your speed and avoid sudden acceleration, abrupt braking, or sharp steering movements.

Snow Chains

Snow chains should only be used if they are needed to increase traction or are required by law. Make sure that the chains you use are the correct size for your vehicle's tyres. Also make sure that there is enough clearance between the fenders and the chains as installed on the tyres.

Install the chains on the front tyres tightly, according to the chain manufacturer's instructions. Retighten the chains after driving about 1.0 km (1/2 mile) if necessary. With the chains installed, drive slowly.

NOTICE

- **If you hear the chains hitting against the vehicle body while driving, stop and tighten them.**
- **If your vehicle is equipped with full wheel caps, remove the wheel caps before installing the chains or the wheel caps can be damaged by the chain bands.**

Stuck Vehicle

If your vehicle gets stuck in snow, mud, or sand, follow the directions below:

1) Shift the transmission back and forth between a forward range (or first gear for manual transmission) and reverse. This will create a rocking motion which may give you enough momentum to free the vehicle. Press gently on the accelerator to keep wheel spinning to a minimum wheel rpm. Remove your foot from the accelerator while shifting.
   Do not race the engine. Excessive wheel spin will cause the tyres to dig deeper, making it more difficult to free the vehicle.

NOTE:
If your vehicle is equipped with the ESP®, you may have to turn the ESP® system off in order to allow spinning the wheels.

2) If your vehicle remains stuck after a few minutes of rocking, we recommend you to consult a SUZUKI dealer or a qualified workshop or a roadside assistance service. If a towing service is not available in an emergency, your vehicle may be temporarily towed by other vehicle with a towing cable or chain secured to the towing eye either on the front of the vehicle or on the rear of the vehicle. Refer to “Frame Hooks” in “OTHER CONTROLS AND EQUIPMENT” section.

⚠ WARNING

Do not allow anyone to stand near the vehicle when you are rocking it, and do not spin the wheels faster than an indicated 40 km/h (25 mph) on the speedometer. Personal injury and/ or vehicle damage may result from spinning the wheels too fast.

NOTICE

Do not continue rocking the vehicle for more than a few minutes. Prolonged rocking can cause engine overheating or transmission damage.

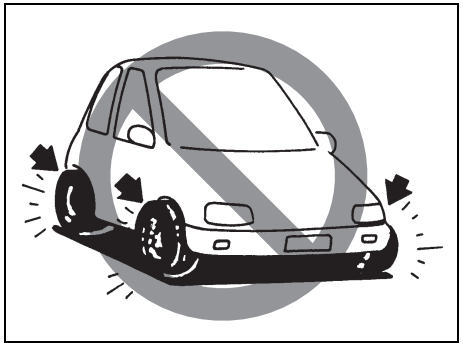

54G638S

⚠ WARNING

In addition to following the driving tips in this section, it is important to observe the following precautions.

- **Make sure your tyres are in good condition and always maintain the specified tyre pressure. Refer to “Tyres” in the “INSPECTION AND MAINTENANCE” section for details.**

(Continued)

⚠ WARNING

(Continued)

- **Do not use tyres other than those specified by SUZUKI. Never use different sizes or types of tyres on the front and rear wheels. For information regarding the specified tyres, refer to the tyre information label located on the driver's door lock pillar.**
- **Never use oversized tyres or special shock absorbers and springs to raise (jack up) your vehicle. This will change the handling characteristics. Oversized tyres may also rub against the fender over bumps, causing vehicle damage or tyre failure.**
- **After driving through water, test the brakes while driving at a slow speed to see if they have maintained their normal effectiveness. If the brakes are less effective than normal, dry them by repeatedly applying the brakes while driving slowly until the brakes have regained their normal effectiveness.**

Off-road Driving

Do not Drive in the Field Covered with Grown Grass

If you drive in the field covered with grass, it may cause accident or vehicle damage by getting caught in grown grass.

When Encountering a Flooded Area

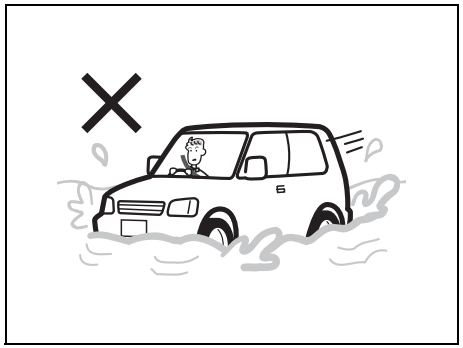

80J042

Avoid driving in a flooded area or a deep puddle. If driving in a flooded area is unavoidable, go slowly in the lowest gear. In case that you have driven in a flooded area, stop the vehicle in a safe place while checking the brake effectiveness. Then, ask a SUZUKI dealer or a qualified workshop to check the following inspection items.

- Function of brake
- Function of electrical components
- Changes of oil level and quality for engine, transmission and differential. In case that the oil is turbid whitely, water has been mixed in the oil and an oil change is required.
- Lubricant condition of the bearings, suspension joints, etc.

NOTICE

Avoid driving in a flooded area or a deep puddle. It may cause an engine stall, short in electrical components, engine and transmission damages, etc.

MEMO

OTHER CONTROLS AND EQUIPMENT

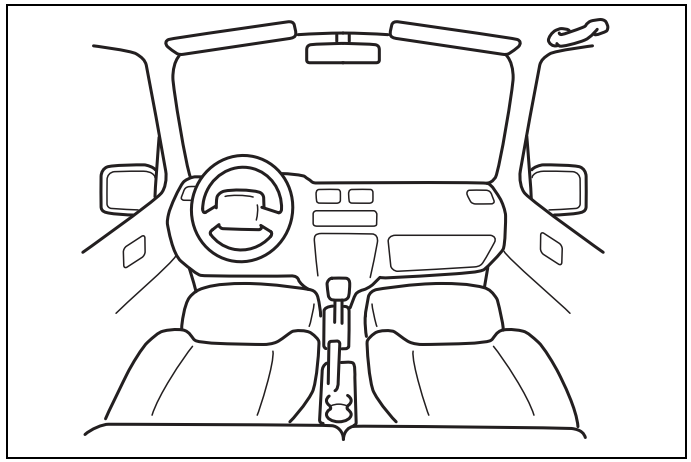

60G407

Heating and Air Conditioning System 5-1
Manual Heating and Air Conditioning System 5-4
Digital Air Conditioning System 5-11
Automatic Heating and Air Conditioning System (Climate Control) 5-18
Radio Antenna 5-24
Installation of Radio Frequency Transmitters 5-25
Audio System (if equipped) 5-25
Fuel Filler Cap 5-57
Engine Hood 5-58
Sun Visor 5-60
Interior Light 5-61
Accessory Socket 5-62
Assist Grips 5-63
Glove Box 5-64
USB Socket (if equipped) 5-64
Cup Holder and Storage Area 5-65
Footrest (if equipped) 5-68
Front Seat Back Pocket (if equipped) 5-68
Luggage Box (if equipped) 5-68
Roof Rails (if equipped) 5-69
Frame Hooks 5-70

Heating and Air Conditioning System

There are three types of heating and air conditioning systems as follows:
- Manual Heating and Air Conditioning System
- Digital air conditioning system
- Automatic heating and air conditioning system (climate control)

Air Outlet

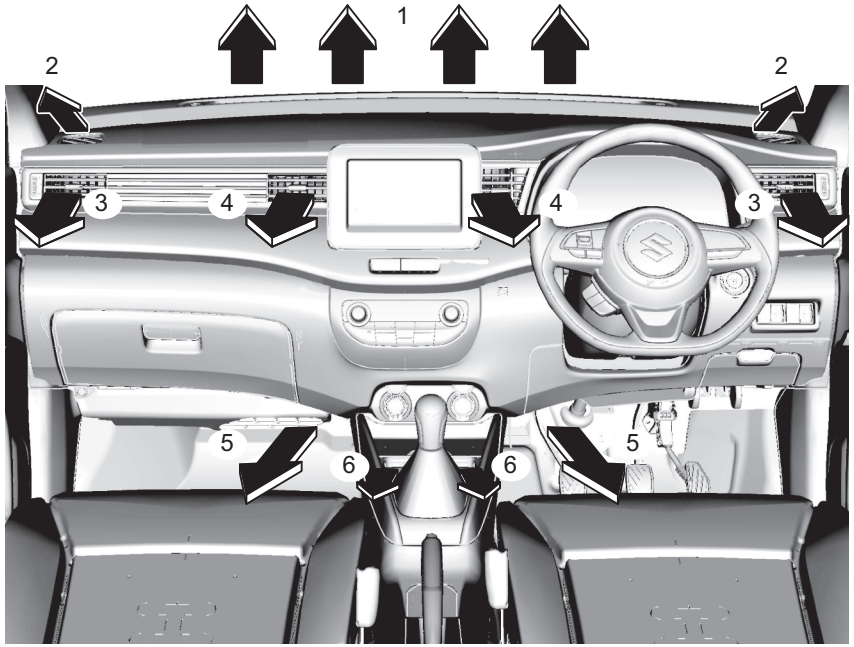

72R0022

1. Windshield defroster outlet
2. Side defroster outlet
3. Side outlet
4. Center outlet
5. Floor outlet
6. Cup holder outlet (if equipped)

Center outlet

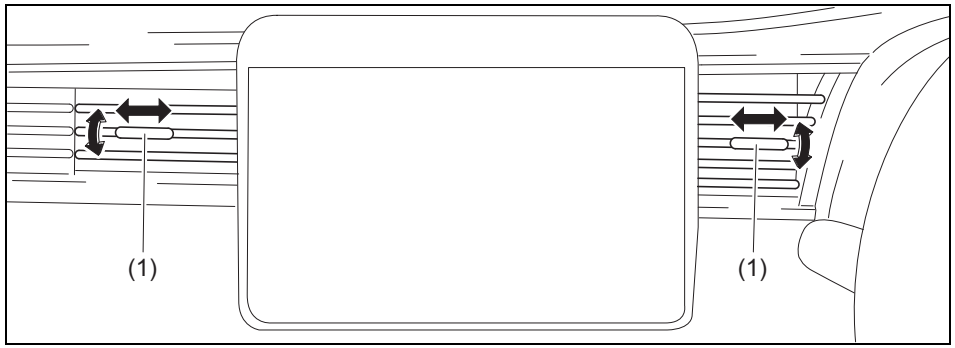

73R0075

Move the knob (1) vertically or horizontally to adjust the direction of air flow as desired.

Side outlet

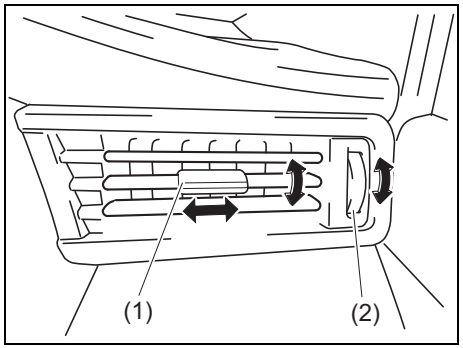

73R0076

When open, air comes out regardless of the air flow selector position.
Move the knob (1) vertically or horizontally, to adjust the direction of air flow as desired.
The side outlet opens when you turn the dial (2) upward and closes when you turn it downward.

⚠ CAUTION

Prolonged exposure to hot air from the heater or air conditioner could result in low temperature burns. All vehicle occupants, particularly children, the elderly, those with special needs, individuals with delicate skin, and sleeping individuals, should maintain sufficient distance from the air outlets to prevent prolonged exposure to hot airflow.

Overhead Rear Air Conditioning System (if equipped)

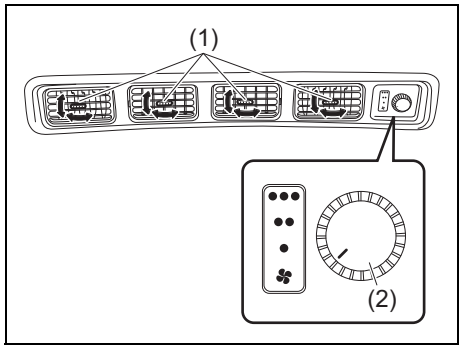

73R0077

(Manual Heating and Air Conditioning System)
To turn on the overhead rear air conditioning system, set the blower speed selector of the manual heating and air conditioning system to a position other than off and push in “A/C” switch. Refer to “Air conditioning switch” in this section. And set the rear blower speed selector (2) to a position other than off.

(Digital Air Conditioning System)
To turn on the overhead rear air conditioning system, set the blower speed selector of the digital air conditioning system to a position other than off and push in “A/C” switch. Refer to “Air conditioning switch” in this section. And set the rear blower speed selector (2) to a position other than off.

(Automatic Heating and Air Conditioning System (climate control)
To turn on the overhead rear air conditioning system, set the blower speed selector of the automatic heating and air conditioning system to a position other than off and push in “A/C” switch. Refer to “Air conditioning switch” in this section. And set the rear blower speed selector (2) to a position other than off.

Move the knob (1) vertically or horizontally to adjust the direction of air flow as desired.

During operation of the air conditioner, you may notice slight changes in engine speed. These changes are normal, the system is designed so that the compressor turns on or off to maintain the desired temperature. Less operation of the compressor results in better fuel economy.

Manual Heating and Air Conditioning System

Description of Controls

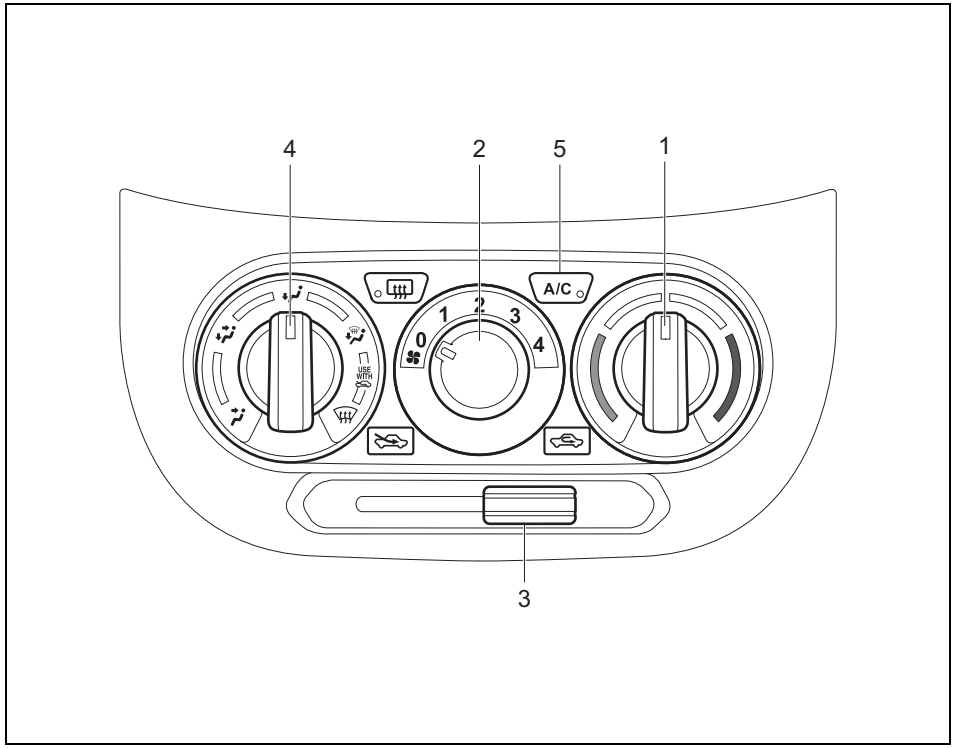

73RS003

1. Temperature selector
2. Blower speed selector
3. Air intake selector
4. Air flow selector
5. Air conditioning switch

Temperature selector (1)
This is used to adjust the temperature.

Blower speed selector (2)
This is used to turn on the blower and to select blower speed.

Air intake selector (3) (Left hand drive vehicle)

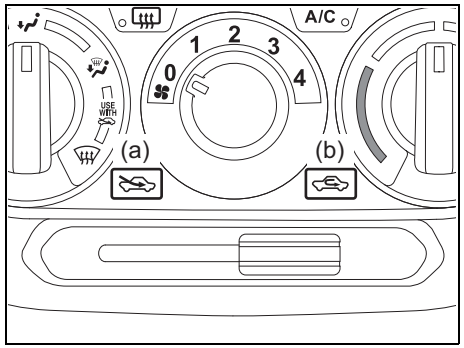

73RS004

This selector is used to select the following modes.

FRESH AIR (a)
When this mode is selected by moving the lever to left, outside air comes in.

RECIRCULATED AIR (b)
When this mode is selected by moving the lever to right, outside air is shut out and inside air is recirculated. This mode is suitable when driving through dusty or polluted air such as in a tunnel, or when attempting to quickly cool down or warm up the interior.

Air intake selector (3) (Right hand drive vehicle)

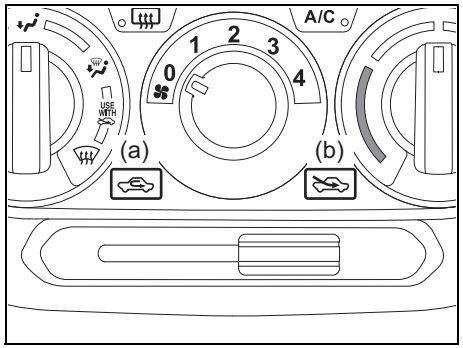

73RS008

This selector is used to select the following modes.

RECIRCULATED AIR (a)
When this mode is selected by moving the lever to left, outside air is shut out and inside air is recirculated. This mode is suitable when driving through dusty or polluted air such as in a tunnel, or when attempting to quickly cool down or warm up the interior.

FRESH AIR (b)
When this mode is selected by moving the lever to right, outside air comes in.

NOTE:
If you select RECIRCULATED AIR for an extended period of time, the air in the vehicle can become contaminated and the windows tend to get misted. Therefore, you should select FRESH AIR whenever possible.

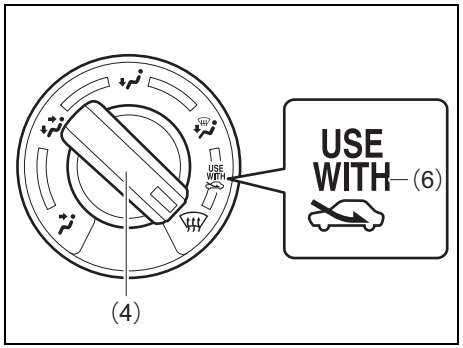

52RS50181

NOTE:
The mark of "USE WITH" (6)
To clear fog on the windshield and/or the side windows quickly, set the air flow selector (4) to "HEAT & DEFROST" or "DEFROST" and air intake selector (3) to "FRESH AIR". These positioning will clear the fogged windshield and/or the side windows faster than the "RECIRCULATED AIR".

Air flow selector (4)

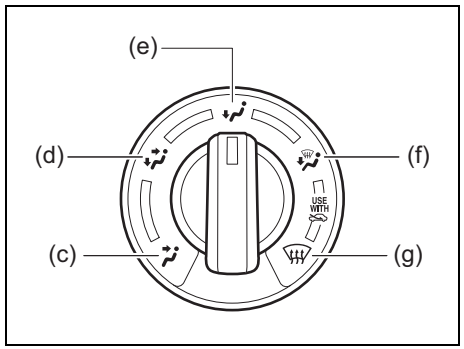

52RM50250

This is used to select one of the following functions.

VENTILATION (c)

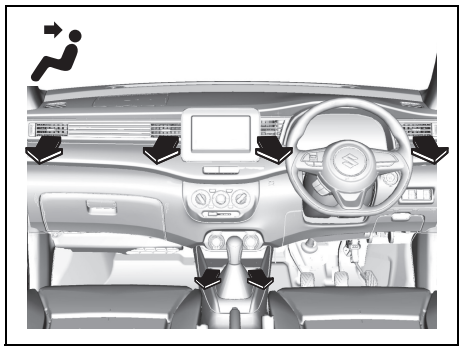

73RS011

Temperature-controlled air comes out of the center, side and cup holder outlets (if equipped).

BI-LEVEL (d)

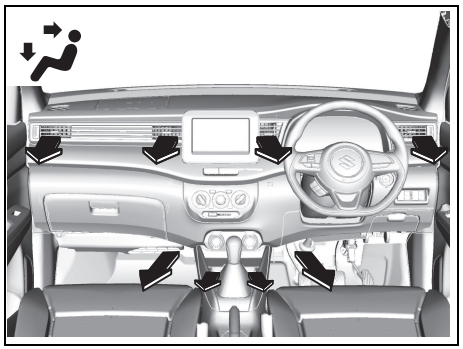

73RS012

Temperature-controlled air comes out of the floor outlets and cooler air comes out of the center, side and cup holder outlets (if equipped). When the temperature selector (1) is in the fully cold position or fully hot position, however, the air from the floor outlets and the air from the center, side and cup holder outlets (if equipped) will be the same temperature.

HEAT (e)

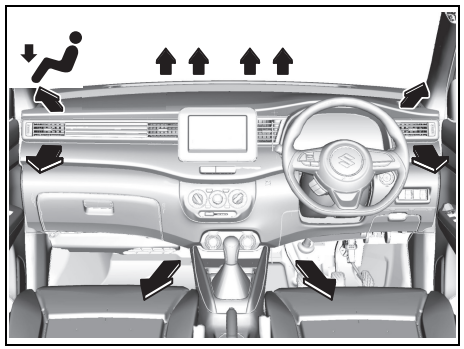

72R0017

Temperature-controlled air comes out of the floor outlets and the side outlets, also comes out of the windshield defroster outlets and also comes slightly out of the side defroster outlets.

HEAT & DEFROST (f)

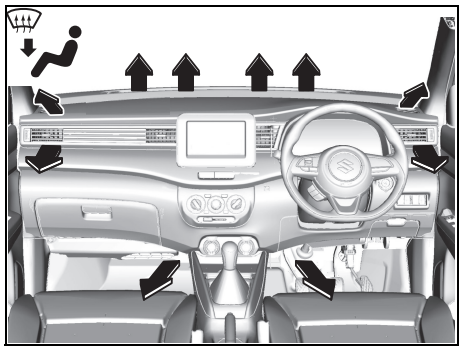

72R0018

Temperature-controlled air comes out of the floor outlets, the windshield defroster outlets, the side defroster outlets and the side outlets.

DEFROST (g)

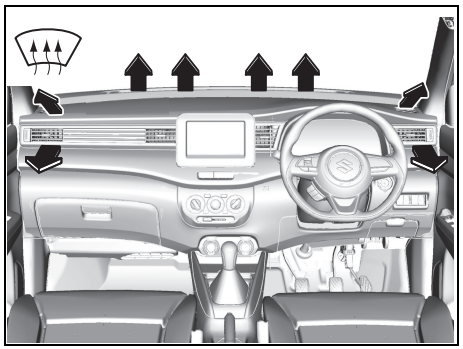

72R0019

Temperature-controlled air comes out of the windshield defroster outlets, the side defroster outlets and the side outlets.

Air conditioning switch (5)
To turn on the air conditioning system, set the blower speed selector to a position other than off and push in “A/C” switch. With this “A/C” switch operation, a indicator light will come on when the air conditioning system is working. To turn off the air conditioning system, push “A/C” switch again.

During operation of the air conditioner, you may notice slight changes in engine speed. These changes are normal, the system is designed so that the compressor turns on or off to maintain the desired temperature.

Less operation of the compressor results in better fuel economy.

System Operating Instructions

Natural ventilation
Select VENTILATION and FRESH AIR, the temperature selector to the desired temperature position, and the blower speed selector to off. Fresh air will flow through the vehicle during driving.

Forced ventilation
The base settings are the same as for natural ventilation except you set the blower speed selector to a position other than off.

Normal heating (using outside air)
Select HEAT and FRESH AIR, the temperature selector to the desired temperature position and the blower speed selector to the desired blower speed position. Setting the blower speed selector to a higher blower speed position increases heating efficiency.

Quick heating (using recirculated air)
The base settings are the same as for normal heating except you select RECIRCULATED AIR. If you use this heating method for an extended period of time, the air in the vehicle can become contaminated and the windows can become misty. Therefore, use this method only for quick heating and change to the normal heating method as soon as possible.

Head cooled/Feet warmed heating
Select BI-LEVEL and FRESH AIR, the temperature selector to the desired temperature position, and the blower speed selector to the desired blower speed position. Unless the temperature selector is in the fully cold position or fully hot position, the air that comes out of the center and side outlets will be cooler than the air that comes out of the floor outlets.

Normal cooling
Set the air flow selector to VENTILATION, the temperature selector to the desired temperature position and the blower speed selector to the desired blower speed position, and turn on “A/C” switch. Setting the blower speed selector to a higher blower speed position increases cooling efficiency.

You can switch the air intake selector to either FRESH AIR or RECIRCULATED AIR as you desire. Choosing RECIRCULATED AIR increases cooling efficiency.

Quick cooling (using recirculated air)
The base settings are the same as for normal cooling except you select RECIRCULATED AIR and the highest blower speed.

NOTE:
- *If you select RECIRCULATED AIR for an extended period of time, the air in the vehicle can become contaminated and the windows tend to get misted. Therefore, you should select FRESH AIR whenever possible.*

- *If your vehicle has been left in the sun with the windows closed, it will cool faster if you open the windows briefly while you operate the air conditioner with the air intake selector at FRESH AIR and the blower at high speed.*

Dehumidifying
Set the air flow selector to a desired air flow selector position, the temperature selector to the desired temperature position and the blower speed selector to the desired blower speed position. Also select FRESH AIR and turn on “A/C” switch.

NOTE:
Because the air conditioner dehumidifies the air, turning it on will help keep the windows clear, even when blowing heated air using DEFROST or HEAT & DEFROST functions.

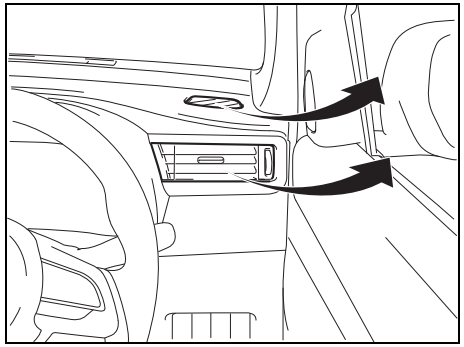

72R0012

NOTE:
If you need maximum defrosting:
- *select DEFROST and FRESH AIR,*
- *set the blower speed selector to high,*
- *adjust the temperature selector to the hot end,*
- *turn on “A/C” switch, and*
- *adjust the side outlets so the air blows on the side windows.*

Maintenance

If you do not use the air conditioner for a long period, such as during winter, it may not give the best performance when you start using it again. To help maintain optimum performance and durability of your air conditioner, it needs to be run periodically. Operate the air conditioner at least once a month for one minute with the engine idling. This circulates the refrigerant and oil and helps protect the internal components.

If your air conditioner is equipped with air filters, clean or replace them as specified in “Maintenance schedule” in “INSPECTION AND MAINTENANCE” section. Have this job done by a SUZUKI dealer or a qualified workshop as the lower glove box must be lowered for this job.

NOTE:
Your vehicle uses the air conditioning refrigerant HFC-134a, commonly called “R-134a”. R-134a replaced R-12 around 1993 for automotive applications. Other refrigerants are available, including recycled R-12, but only R-134a should be used in your vehicle.

NOTICE
Using the wrong refrigerant may damage your air conditioning system. Use R-134a only. Do not mix or replace the R-134a with other refrigerants.

Digital Air Conditioning System

Description of Controls

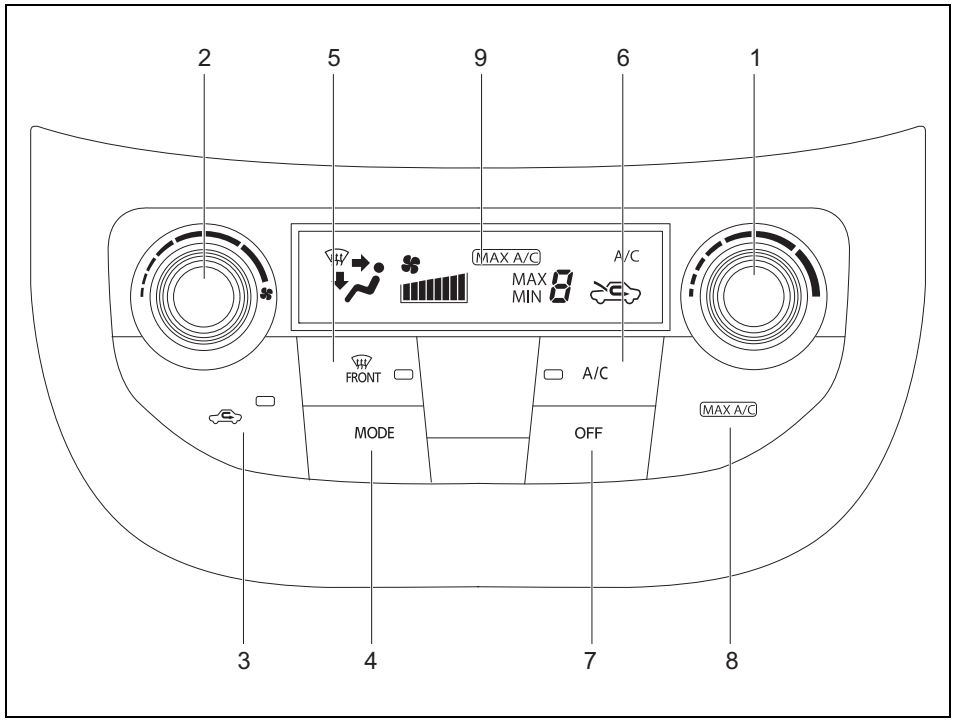

73R0305

1. Temperature selector
2. Blower speed selector
3. Air intake selector
4. Air flow selector
5. Defrost switch
6. Air conditioning switch
7. “OFF” switch
8. Maximum cooling switch
9. Display

Temperature selector (1)

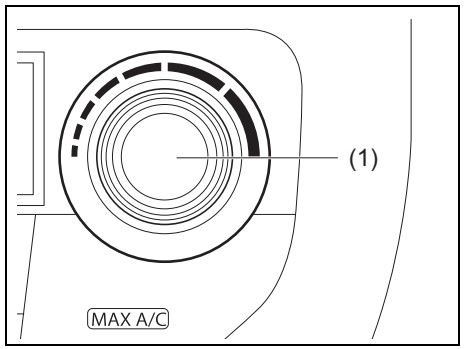

73R0306

Turn the temperature selector (1) to adjust the temperature.

NOTE:
- *The temperature setting can be adjusted to 8 levels. The current setting value (1 to 8) is displayed in the display.*
- *If you turn the temperature selector (1) clockwise until the setting value is changed to "8" and "MAX" appears on the display, the air conditioning system will operate at maximum cooling.*
- *If you turn the temperature selector (1) counterclockwise until the setting value is changed to "1" and "MIN" appears on the display, the air conditioning system will operate at minimum cooling.*

Blower speed selector (2)

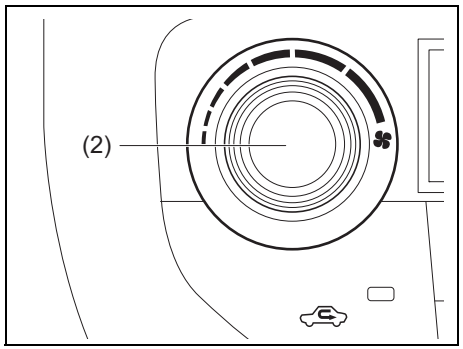

73R0307

The blower speed selector (2) is used to turn on the blower and to select blower speed.

Air intake selector (3)

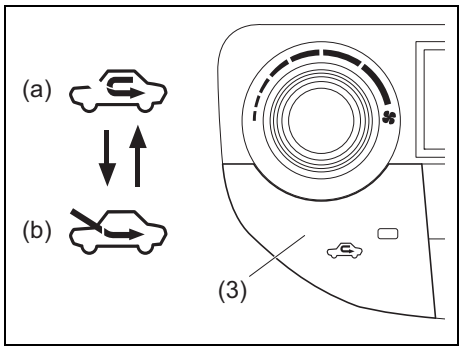

73R0308

Push the air intake selector (3) to change between the recirculated air and fresh air modes.

RECIRCULATED AIR (a)
When this mode is selected, outside air is shut off and inside air is recirculated. This mode is suitable when driving through dusty or polluted air such as a tunnel, or when attempting to quickly cool down the interior.

FRESH AIR (b)
When this mode is selected, outside air is introduced.

FRESH AIR and RECIRCULATED AIR are selected alternately each time the air intake selector is pushed.

NOTE:
If you select RECIRCULATED AIR for an extended period of time, the air in the vehicle can become contaminated and the windows tend to get misted. Therefore, you should select FRESH AIR whenever possible.

Air flow selector (4)

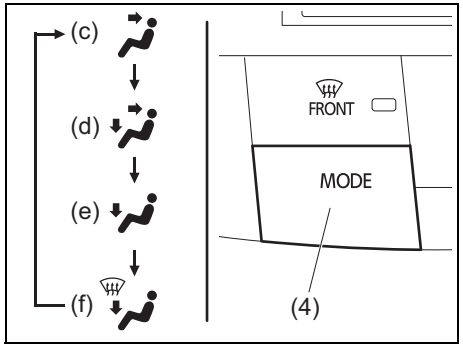

72R0020

Push the air flow selector (4) to change among the following functions. The indication of the selected mode appears in the display.

VENTILATION (c)

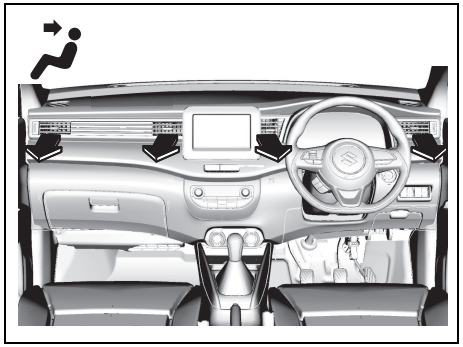

73R0323

Temperature-controlled air comes out of the center and side outlets.

BI-LEVEL (d)

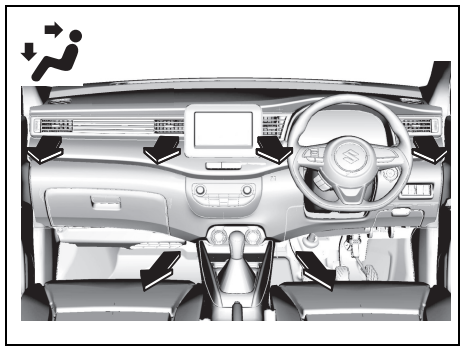

73R0324

Temperature-controlled air comes out of the floor outlets and cooler air comes out of the center and side outlets. When the temperature selector (1) is in the fully cold position, however, the air from the floor outlets and the air from the center and side outlets will be the same temperature.

FOOT (e)

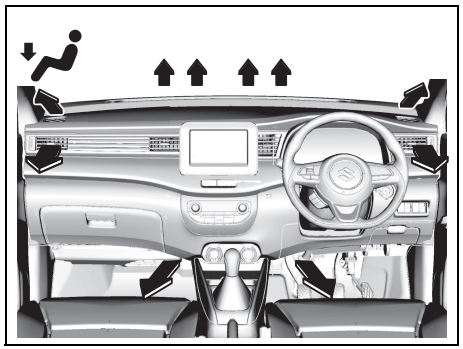

73R0318

Temperature-controlled air comes out of the floor outlets and the side outlets, a small amount of air comes out of the windshield defroster outlets and also comes slightly out of the side defroster outlets.

FOOT & DEFROST (f)

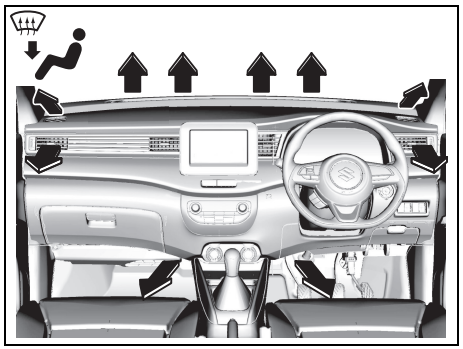

72R0007

Temperature-controlled air comes out of the floor outlets, the windshield defroster outlets, the side defroster outlets and the side outlets.

Defrost switch (5)

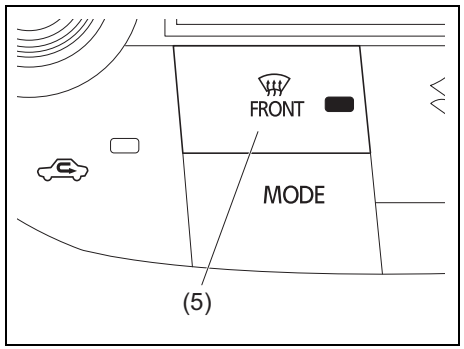

73R0309

Push the defrost switch (5) to turn on the defroster.

DEFROST

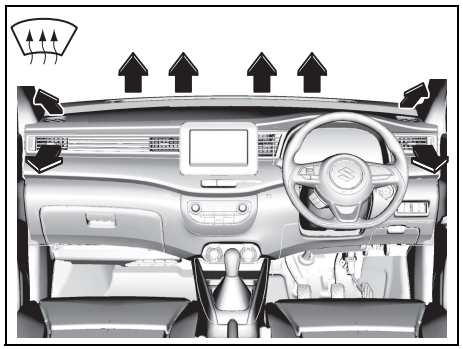

72R0009

Temperature-controlled air comes out of the windshield defroster outlets, the side defroster outlets and the side outlets.

NOTE:
When the defrost switch (5) is pushed to turn on the defroster, the air conditioning system will operate and FRESH AIR mode will be selected automatically. In very cold weather, however, the air conditioning system will not operate.

Air conditioning switch (6)

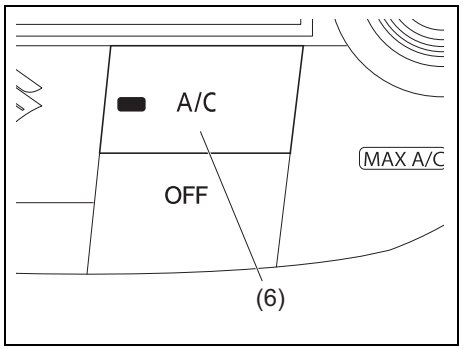

73R0310

The air conditioning switch (6) is used to turn on and off the air conditioning system only when the blower is on. To turn on the air conditioning system, push in the switch and “A/C” will appear in the display. To turn off the air conditioning system, push in the switch again and “A/C” will go off.

Maximum cooling switch (8)

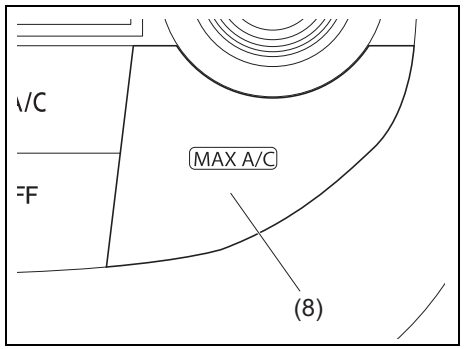

73R0311

Push the maximum cooling switch (8) to cool down the interior at peak efficiency.

NOTE:
- *When the maximum cooling switch is pushed, "MAX A/C" will appear in the display and the air conditioning system will operate in the following settings automatically.*
  - *The air conditioner: On*
  - *The blower speed: Full speed*
  - *The temperature setting level: Level 8 (MAX)*
  - *The air flow mode: VENTILATION (c)*
  - *The air intake mode: RECIRCULATED AIR (a)*
- *To return to the current setting, push the maximum cooling switch again.*

System Operating Instructions

To set the air conditioning system, follow the procedure below.
1) Start the engine.
2) Set the desired blower speed by turning the blower speed selector (2).
3) Set the desired temperature by turning the temperature selector (1).

You can use the air conditioning switch (6) to manually turn the air conditioner on or off according to your preference. When you turn the air conditioning switch off, the air conditioning system cannot lower the inside temperature below the outside temperature.

To turn the air conditioning system off, push the "OFF" switch (7).

Normal cooling
Set the air flow selector (4) to VENTILATION (c), the temperature selector (1) to the desired temperature position and the blower speed selector (2) to the desired blower speed position. Setting the blower speed selector (2) to a higher blower speed position increases cooling efficiency.

You can switch the air intake selector (3) to either FRESH AIR (b) or RECIRCULATED AIR (a) as you desire. Choosing RECIRCULATED AIR (a) increases cooling efficiency.

Quick cooling (using recirculated air)
The base settings are the same as for normal cooling except you select RECIRCULATED AIR (a) and the highest blower speed.

To cool down the interior at peak efficiency, push the maximum cooling switch (8).

NOTE:
- *If you select RECIRCULATED AIR (a) for an extended period of time, the air in the vehicle can become contaminated and the windows tend to get misted. Therefore, you should select FRESH AIR (b) whenever possible.*
- *If your vehicle has been left in the sun with the windows closed, it will cool faster if you open the windows briefly while you operate the air conditioner with the air intake selector at FRESH AIR (b) and the blower at high speed.*

Dehumidifying
Set the air flow selector (4) to the desired air flow selector position, the temperature selector (1) to the desired temperature position and the blower speed selector (2) to the desired blower speed position. Also select FRESH AIR (b).

NOTE:
Because the air conditioner dehumidifies the air, turning it on will help keep the windows clear.

Maintenance

If you do not use the air conditioner for a long period, such as during winter, it may not give the best performance when you start using it again. To help maintain optimum performance and durability of your air conditioner, it needs to be run periodically. Operate the air conditioner at least once a month for one minute with the engine idling. This circulates the refrigerant and oil and helps protect the internal components.

If your air conditioner is equipped with air filters, clean or replace them as specified in “Maintenance schedule” in “INSPECTION AND MAINTENANCE” section. Have this job done by a SUZUKI dealer or a qualified workshop as the lower glove box must be lowered for this job.

NOTE:
Your vehicle uses the air conditioning refrigerant HFC-134a, commonly called R-134a. R-134a replaced R-12 around 1993 for automotive applications. Other refrigerants are available, including recycled R-12, but only R-134a should be used in your vehicle.

NOTICE
Using the wrong refrigerant may damage your air conditioning system. Use R-134a only. Do not mix or replace the R-134a with other refrigerants.

Automatic Heating and Air Conditioning System (Climate Control)

Description of Controls

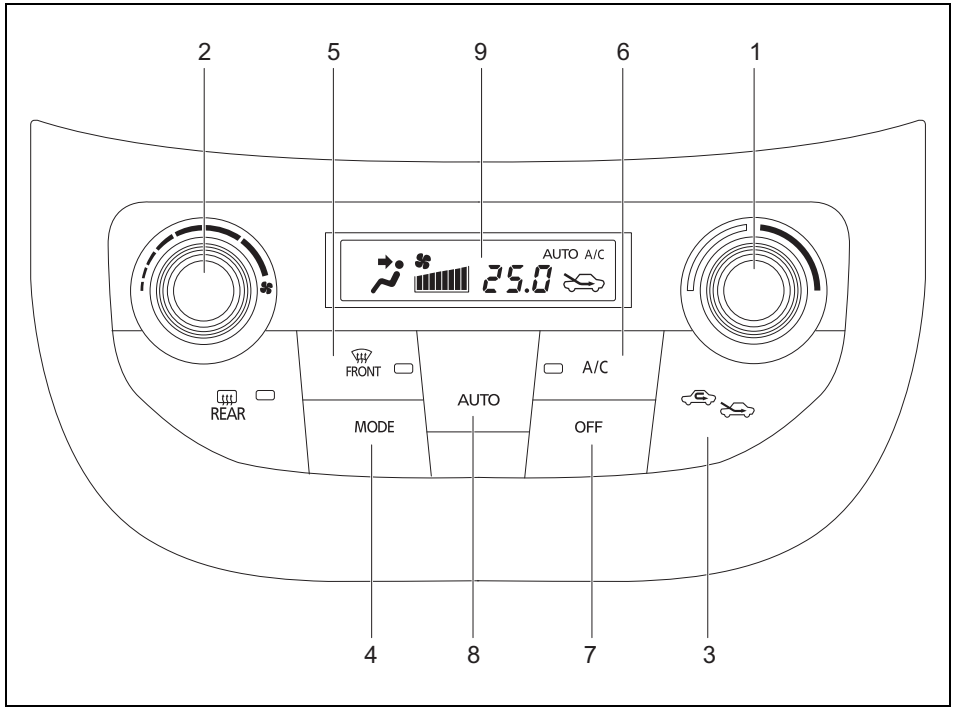

72R0002

1. Temperature selector
2. Blower speed selector
3. Air intake selector
4. Air flow selector
5. Defrost switch
6. Air conditioning switch
7. “OFF” switch
8. “AUTO” switch
9. Display

Temperature selector (1)

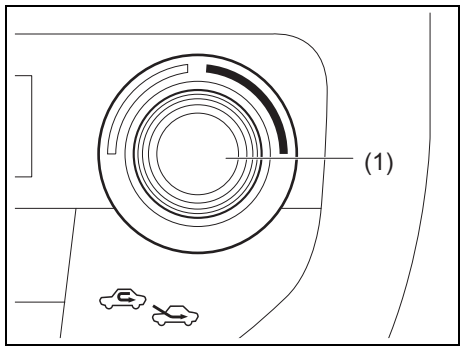

72R0003

Turn the temperature selector (1) to adjust the temperature.

NOTE:
If you turn the temperature selector (1) until "HI" or "LO" appears on the display, the climate control system will operate at maximum heating or cooling. The temperature of the air from the outlets may change suddenly while "LO" or "HI" is displayed, but this is normal.

NOTE:
When you change the unit of temperature in the information display, the unit of temperature in the air conditioning system will be changed. Refer to "Information display" in the "BEFORE DRIVING" section for details.

Blower speed selector (2)

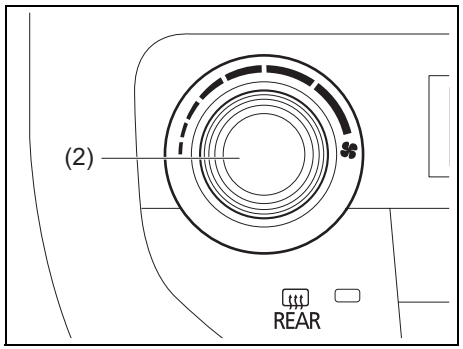

72R0004

The blower speed selector (2) is used to turn on the blower and to select blower speed.

If "AUTO" switch (8) is pushed, the blower speed will vary automatically as the climate control system maintains the selected temperature.

Air intake selector (3)

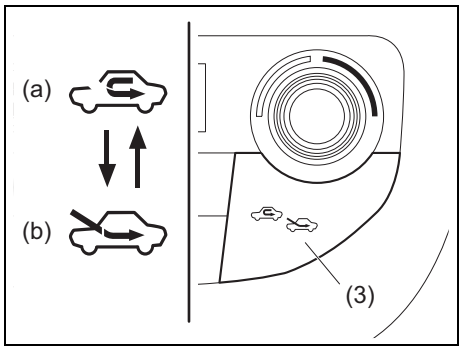

72R0005

Push the air intake selector (3) to change between the recirculated air and fresh air modes.

If "AUTO" switch (8) is pushed, the air intake will vary automatically as the climate control system maintains the selected temperature.

NOTE:
When the recirculated air mode is selected, the automatic operation system is deactivated even if you push "AUTO" switch (8).

RECIRCULATED AIR (a)
When this mode is selected, outside air is shut off and inside air is recirculated. This mode is suitable when driving through dusty or polluted air such as a tunnel, or when attempting to quickly cool down or warm up the interior.

FRESH AIR (b)
When this mode is selected, outside air is introduced.

FRESH AIR and RECIRCULATED AIR are selected alternately each time the air intake selector is pushed.

NOTE:
If you select RECIRCULATED AIR for an extended period of time, the air in the vehicle can become contaminated and the windows tend to get misted. Therefore, you should select FRESH AIR whenever possible.

Air flow selector (4)

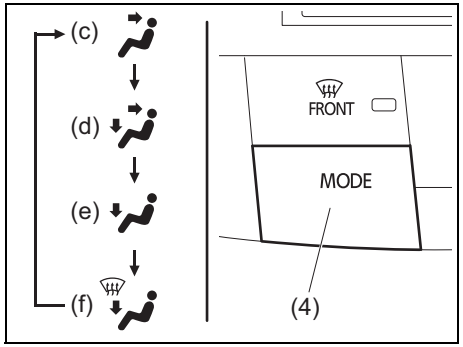

72R0020

Push the air flow selector (4) to change among the following functions. The indication of the selected mode appears in the display.

If “AUTO” switch (8) is pushed, the air flow will vary automatically as the climate control system maintains the selected temperature.

VENTILATION (c)

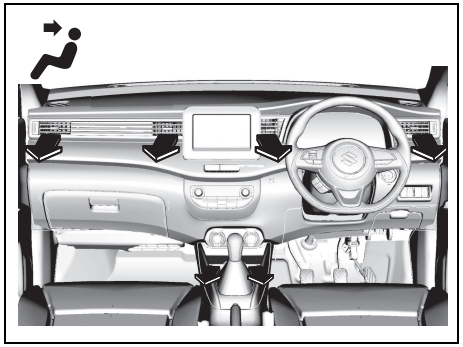

72R0013

Temperature-controlled air comes out of the center, side and cup holder outlets.

BI-LEVEL (d)

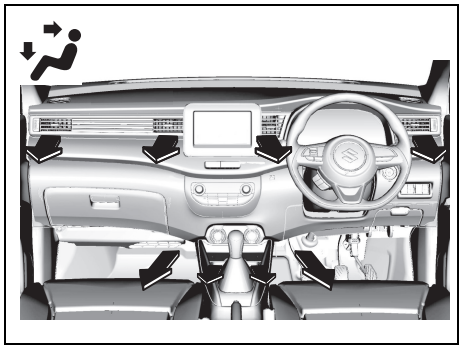

72R0014

Temperature-controlled air comes out of the floor outlets and cooler air comes out of the center, side and cup holder outlets. When the temperature selector (1) is in the fully cold position or fully hot position, however, the air from the floor outlets and the air from the center, side and cup holder outlets will be the same temperature.

HEAT (e)

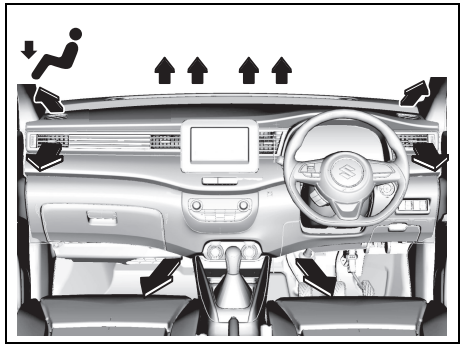

72R0006

Temperature-controlled air comes out of the floor outlets and the side outlets, a small amount of air comes out of the windshield defroster outlets and also comes slightly out of the side defroster outlets.

HEAT & DEFROST (f)

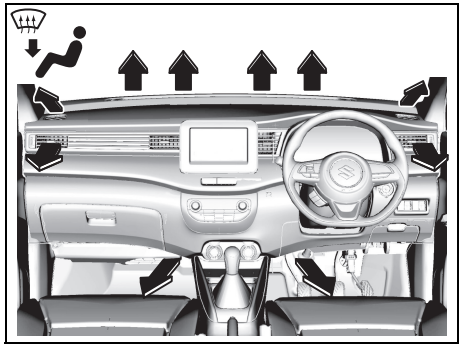

72R0007

Temperature-controlled air comes out of the floor outlets, the windshield defroster outlets, the side defroster outlets and the side outlets.

Defrost switch (5)

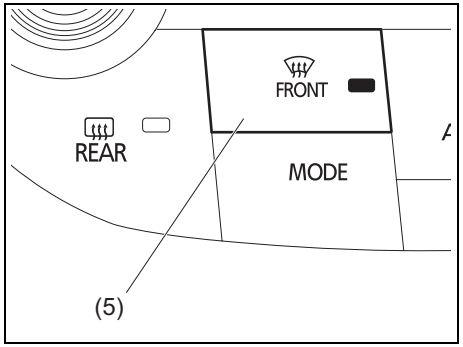

72R0008

Push the defrost switch (5) to turn on the defroster.

DEFROST

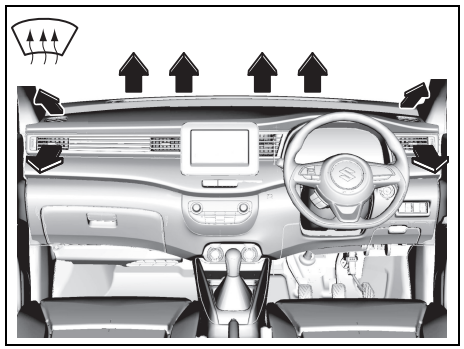

72R0009

Temperature-controlled air comes out of the windshield defroster outlets, the side defroster outlets and the side outlets.

NOTE:
When the defrost switch (5) is pushed to turn on the defroster, the air conditioning system will operate and FRESH AIR mode will be selected automatically. In very cold weather, however, the air conditioning system will not operate.

Air conditioning switch (6)

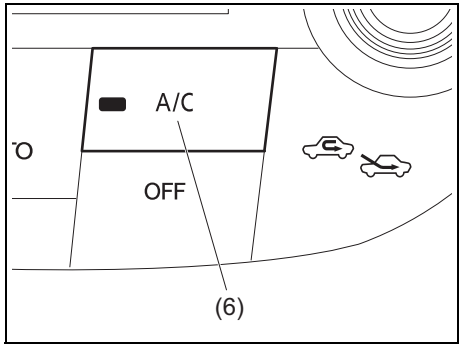

72R0010

The air conditioning switch (6) is used to turn on and off the air conditioning system only when the blower is on. To turn on the air conditioning system, push in the switch and “A/C” will appear in the display. To turn off the air conditioning system, push in the switch again and “A/C” will go off.

System Operating Instructions

Automatic operation

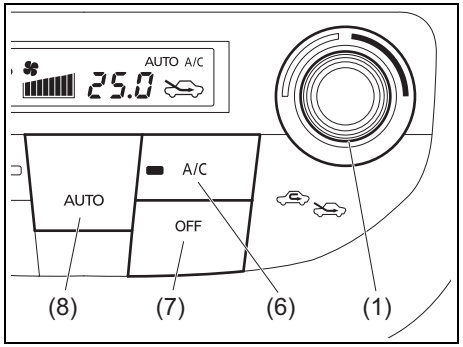

72R0011

You can let the climate control system work automatically. To set the system for fully-automatic operation, follow the procedure below.

1) Start the engine.
2) Push “AUTO” switch (8).
3) Set the desired temperature by turning the temperature selector (1).

The blower speed, air intake and air flow are controlled automatically to maintain the set temperature. However, the air flow is not changed to DEFROST position automatically.

NOTE:
When the recirculated air mode is selected, the automatic operation system is deactivated even if you push "AUTO" switch (8).

You can use the air conditioning switch (6) to manually turn the air conditioner on or off according to your preference. When you turn the air conditioning switch off, the climate control system cannot lower the inside temperature below outside temperature.

To turn the climate control system off, push the "OFF" switch (7).

NOTE:
If "AUTO" in the display blinks, there is a problem in the heating system and/or air conditioning system. You should have the system inspected by a SUZUKI dealer or a qualified workshop.

NOTE:
- *To find the temperature at which you are most comfortable, start with the 22°C (72°F) or 25°C (75°F) setting. (the temperature vary depending on vehicle specifications.).*
- *If you turn the temperature selector (1) until "HI" or "LO" appears on the display, the climate control system will operate at maximum heating or cooling and the blower will run at full speed.*
- *To avoid blowing cold air in cold weather or hot air in hot weather, the system will delay turning on the blower until warmed or cooled air is available.*
- *If your vehicle has been left in the sun with the windows closed, it will cool faster if you open the windows briefly.*
- *Even under the automatic operation, you can set individual selectors to the manual mode. The manually selected functions are maintained, and the other functions remain under automatic operation.*
- *If the windshield and/or the front door windows are fogged, push the defrost switch (5) to turn on the defroster, or push the air flow selector (4) to change the air flow to HEAT & DEFROST position to defog the windows.*
- *To return the blower speed selector (2), air intake selector (3), and air flow selector (4) to automatic operation, push "AUTO" switch (8).*

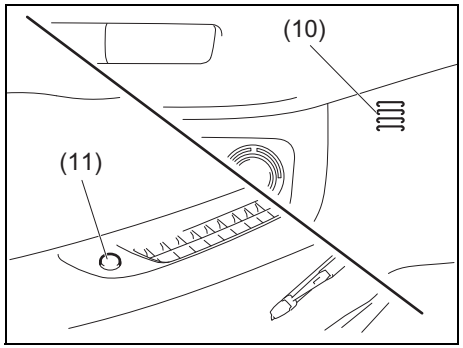

72R0021

Be careful not to cover the interior temperature sensor (10) located between the steering wheel and the climate control panel, or the solar sensor (11) located at the top of the driver's side dashboard. These sensors are used by the automatic system to regulate temperature.

Manual operation
You can manually control the climate control system. Set the selectors to the desired positions.

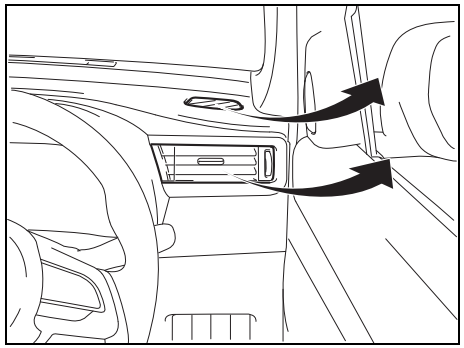

72R0012

NOTE:
If you need maximum defrosting:
- *push the defrost switch (5) to turn on the defroster (the air conditioning system will operate and FRESH AIR mode will be selected automatically),*
- *set the blower speed selector to high,*
- *adjust the temperature selector to "HI" indication on the display, and*
- *adjust the side outlets so the air blows on the side windows.*

Maintenance

If you do not use the air conditioner for a long period, such as during winter, it may not give the best performance when you start using it again. To help maintain optimum performance and durability of your air conditioner, it needs to be run periodically. Operate the air conditioner at least once a month for one minute with the engine idling. This circulates the refrigerant and oil and helps protect the internal components.

If your air conditioner is equipped with air filters, clean or replace them as specified in "Maintenance schedule" in "INSPECTION AND MAINTENANCE" section. Have this job done by a SUZUKI dealer or a qualified workshop as the lower glove box must be lowered for this job.

NOTE:
Your vehicle uses the air conditioning refrigerant HFC-134a, commonly called R-134a. R-134a replaced R-12 around 1993 for automotive applications. Other refrigerants are available, including recycled R-12, but only R-134a should be used in your vehicle.

NOTICE
Using the wrong refrigerant may damage your air conditioning system. Use R-134a only. Do not mix or replace the R-134a with other refrigerants.

Radio Antenna

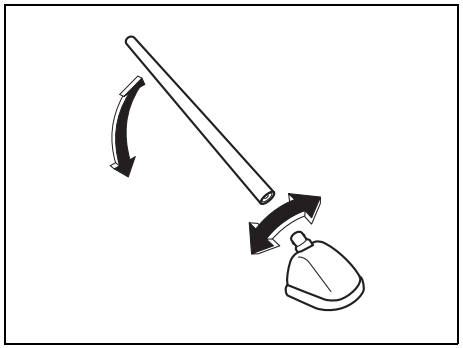

86T0017

The radio antenna on the roof is removable. To remove the antenna, turn it counterclockwise. To reinstall the antenna, turn it clockwise firmly by hand.

NOTE:
Adjust the antenna angle to maximum for optimum radio reception.

NOTICE

To avoid damage to the radio antenna:

- **Remove the antenna when using an automatic car wash.**
- **Remove the antenna when the antenna hits anything such as a low ceiling in a parking garage or putting a car cover over your vehicle.**

Installation of Radio Frequency Transmitters

We recommend that you always ask a SUZUKI dealer about frequency band, max output power, antenna position at vehicle and specific conditions for installation and/or use before installing a radio transmitter in your vehicle. Such equipments may cause the electronic control system to malfunction if they are incorrectly installed or they are not suited for the vehicle.

Audio System (if equipped)

Safety Information

⚠ WARNING

If you pay too much attention to operating the audio system or watching the audio system display while driving, an accident can occur. If you set the sound volume too loud, it could prevent you from being aware of road and traffic conditions.

- **Keep your eyes on the road and your mind on the drive. Avoid paying too much attention to operating the audio system or watching the audio system display.**
- **Familiarize yourself with the audio system controls and operation of the audio system before driving.**
- **Preset your favorite radio stations before driving so that you can quickly tune to them using the presets.**
- **Set the sound volume to a level that will allow you to continue to be aware of surrounding road and traffic conditions while driving.**

Bluetooth®

The Bluetooth® word mark and logo are registered trademarks and are owned by the Bluetooth SIG, Ink.

Stop using this unit and a Bluetooth® ready device whenever requested.
This unit shares the communication frequency with other private or public wireless communication equipment such as a wireless LAN and other wireless communication radios.
You should stop using this unit immediately whenever you are notified that your unit disturbs other wireless communication.

Basic Operations

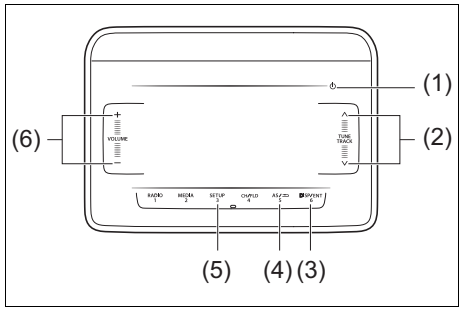

73R0137

(1)POWER button
(2)“TUNE/TRACK” Up/Down button
(3)“ENTER” button
(4)BACK button
(5)SETUP button
(6)“VOLUME” button

Turning power on/off
Touch the POWER button (1).
The audio system starts in the function mode it was in when the power was turned off last.
- Touching the POWER button (1) for 1 second or longer can turn off the audio system.

Slide touch operation
Operate several functions with the slide touch operation. Touch the panel and slide up or down with your finger for increase/decrease or up/down operation.

NOTE:
Pay caution to the following content regarding slide touch operation:
- *The touch button may not operate properly when the touch panel or your fingers are wet. Remove any liquid before operating.*
- *Depending on the operation method it may react without touching.*
- *It may not react properly when operated with gloves on.*
- *When metal objects are placed near the touch panel it may cause a malfunction.*
- *Do not attach protective film. Otherwise, the touch panel may not operate properly.*

Functions available with the slide touch operation

Mode	Function	+ −	^ v
Common	Volume up/down	O	–
	Item selection	–	O
Radio	TUNE up/down	–	O
USB	File up/down	–	O
	Folder up/down (folder operation mode)	–	O
iPod	TRACK up/down	–	O
	Category selection (iPod menu)	–	O
Bluetooth® audio	TRACK up/down	–	O
	Group up/down (Group operation mode)	–	O
Hands-free	Reception/ringtone/incoming call volume up/down	O	–
	Switching pages of the speed dial selection screen	–	O

Adjusting the volume
Touch or slide the “VOLUME” button (6).
- To increase the volume, touch + or slide upwards.
- To decrease the volume, touch − or slide downwards.

NOTE:
While driving, adjust the volume to an extent that sound and/or noise coming from outside can be heard.

Sound settings
1) Touch the SETUP button (5).
   •Touch for 1 second or longer when using radio mode.
2) Touch or slide the “TUNE/TRACK” Up/Down button (2), select “Sound”, and touch the “ENTER” button (3).
   •The sound setting screen will be displayed.
3) Touch or slide the “TUNE/TRACK” Up/Down button (2), select the desired item, and touch the “ENTER” button (3).
   •The sound settings will change as follows:
   •EQ ↔ Bass ↔ Treble ↔ Balance ↔ Fader ↔ AVC

Preset EQ
The preset EQ can set various types of sounds depending on the type of music.
1) Touch or slide the “TUNE/TRACK” Up/Down button (2) from the “Sound” screen, select “EQ”, and touch the “ENTER” button (3).
2) Touch or slide the “TUNE/TRACK” Up/Down button (2), select the desired item, and touch the “ENTER” button (3).

• The preset EQ settings will change as follows:
Off (Flat) ↔ Jazz ↔ Rock ↔ Pop ↔ Classic ↔ Hip-hop

Adjusting bass/treble/balance /fader
The preset EQ can set various types of sounds depending on the type of music.
1) Touch or slide the “TUNE/TRACK” Up/Down button (2) from the “Sound” screen, select “Bass”, “Treble”, “Balance”, or “Fader” and touch the “ENTER” button (3).
2) Touch or slide the “TUNE/TRACK” Up/Down button (2), adjust to the desired settings and touch the “ENTER” button (3).

• “Bass”/“Treble”:
– Can be adjusted in stages from -6 to 0 to +6.
– Touch ^ to emphasize the low or high sounds, and touch v to quiet.
• “Balance”:
– Can be adjusted in 9 stages left to right.
– Touch ^ to emphasize the right speaker, and touch v to emphasize the left speaker.
• “Fader”:
– Can be adjusted in 9 stages back to front.
– Touch ^ to emphasize the front speaker, and touch v to emphasize the rear speaker.

Adjusting the AVC (Auto volume control)
The Auto Volume Control (AVC) function automatically adjusts (increases/decreases) the sound volume in accordance with vehicle speed. The AVC control is provided with three selectable levels (LEVEL OFF, 1, 2, 3). The range of volume adjustment increases together with the LEVEL number.

1) Touch or slide the “TUNE/TRACK” Up/Down button (2) from the “Sound” screen, select “AVC”, and touch the “ENTER” button (3).
2) Touch or slide the “TUNE/TRACK” Up/Down button (2), select the desired level, and touch the “ENTER” button (3).

• The AVC will change as follows:
Off ↔ Level 1 ↔ Level 2 ↔ Level 3

System Settings

Change the “Beep”, “Slide”, and “SW Sensitivity” settings.
1) Touch the SETUP button (5).
• Touch for 1 second or longer when using radio mode.
2) Touch or slide the “TUNE/TRACK” Up/Down button (2), select “System”, and touch the “ENTER” button (3).
• The system setting screen will be displayed.
3) Touch or slide the “TUNE/TRACK” Up/Down button (2), select the desired item, and touch the “ENTER” button (3).
• The system settings will change as follows:
Beep ↔ Slide ↔ SW Sensitivity

BEEP on/off
1) Touch or slide the “TUNE/TRACK” Up/Down button (2) from the “System” screen, select “Beep”, and touch the “ENTER” button (3).
2) Touch or slide the “TUNE/TRACK” Up/Down button (2), select on or off, and touch the “ENTER” button (3).

Slide touch operation settings
Turn the slide operation on/off.
1) Touch or slide the “TUNE/TRACK” Up/Down button (2) from the “System” screen, select “Slide”, and touch the “ENTER” button (3).
2) Touch or slide the “TUNE/TRACK” Up/Down button (2), select on or off, and touch the “ENTER” button (3).

Touch panel sensitivity settings
Change the touch panel sensitivity.
1) Touch or slide the “TUNE/TRACK” Up/Down button (2) from the “System” screen, select “SW Sensitivity”, and touch the “ENTER” button (3).
2) Touch or slide the “TUNE/TRACK” Up/Down button (2), select Low or High, and touch the “ENTER” button (3).

NOTE:
If the touch button sensitivity is too high, set to “Low”.

Radio

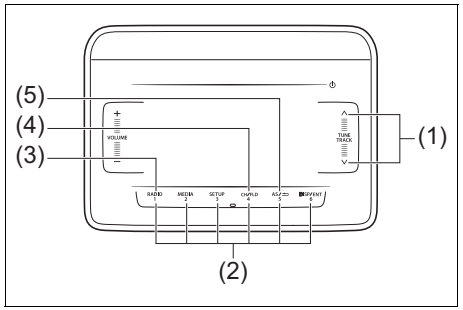

73R0138

(1) “TUNE/TRACK” Up/Down button
(2) Preset button
(3) “RADIO” button*1
(4) “CH” (channel) button
(5) “AS” (auto store) button
*1 Use this button to switch between manual preset and auto preset.

Display
Manual preset

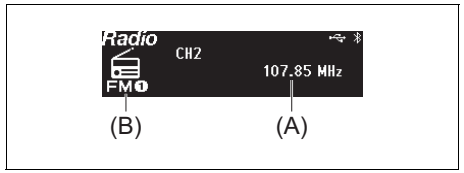

73R0139

Auto preset

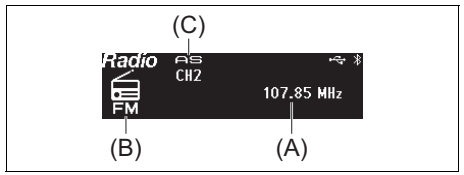

73R0140

(A) Frequency
(B) Band
(C) Auto Store mode display

NOTE:
Radio Reception
Radio reception can be affected by environment, atmospheric conditions, or radio signal's power and distance from the station. Nearby mountains and buildings may interfere or deflect radio reception, causing poor reception. Poor reception or radio static can also be caused by electric current from overhead wires or high voltage power lines.

Selecting the band
1) Touch the "RADIO" button (3) for 1 second or longer.
- Each time the button is touched, the mode will change as follows:
- AM → FM1 → FM2 → AM(AS) → FM(AS)...

Seek tuning
1) Touch the "TUNE/TRACK" Up/Down button (1) for 1 second or longer.
- The audio system stops searching for a station at a frequency where a broadcast station is available.

Manual tuning
1) Touch the "TUNE/TRACK" Up/Down button (1) to select the desired station.

Storing the station
Manual store
1) Select the station and frequency.
2) Touch and hold the "CH" button (4) for at least 1 second.
3) Hold down a desired button ([1] to [6]) of the Preset buttons (2) to which you want to store the station for 2 seconds or longer.

NOTE:
6 stations can be stored for AM, and 6 stations for each of FM1 and FM2, thus 18 stations can be stored in total.

Auto store
1) Touch the "AS" button (5) for 1 second or longer.
- Start searching from a station whose frequency is the lowest. When a broadcast station that can be received with a sufficient strength is discovered, it will be assigned to the AM (AS)/FM (AS) band's preset button (2). Once this process is completed the tuner will return to the first stored broadcast station.

NOTE:
- *Auto store can be released by touching the "AS" button (5) while auto store is under way.*
- *When the auto store is performed, the station previously stored in the memory at the position is overwritten.*
- *6 stations can be preset for FM, and 6 stations for AM in auto store mode.*

Select from the preset channels
Manual preset channel
1) Select the radio station and frequency.
2) Touch the “CH” button (4) for 1 second or longer.
3) Touch a desired button ([1] to [6]) of the Preset buttons (2).

NOTE:
Touch and hold the “CH” button (4) for at least one second to select from the preset channel list.

Auto preset channel
1) Touch the “RADIO” button (3) for 1 second or longer and select AM (AS) or FM (AS).
2) Touch the “CH” button (4) for 1 second or longer.
• The preset channel list is displayed.
3) Touch a desired button ([1] to [6]) of the Preset buttons (2).

USB

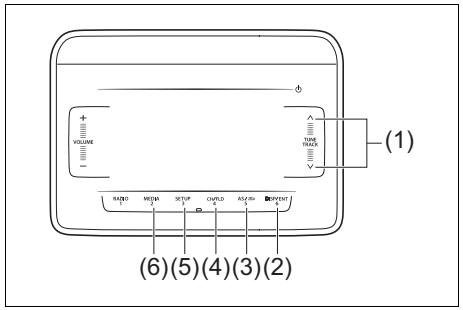

73R0141

(1) “TUNE/TRACK” Up/Down button
(2) “DISP/ENTER” button
(3) BACK button
(4) “FLD” (folder operation) button
(5) SETUP (random/repeat) button
(6) “MEDIA” button

Display

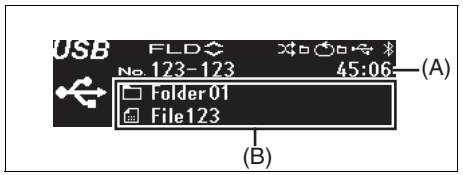

73R0142

(A) Play time
(B) Text information display

⚠ WARNING

Do not connect any USB device other than a USB memory or a USB audio player. Do not connect multiple USB devices to the USB connector using a USB hub, etc. Supplying power to multiple USB devices from the connector could cause overheating and smoking.

Selecting a USB device mode
1) Touch the “MEDIA” button (6).
• Each time the button is touched, the mode will change as follows:
USB (iPod) (if equipped) → Bluetooth® audio (if equipped) → AUX (if equipped)...

Fast forwarding/Rewinding a track
1) Hold down the “TUNE/TRACK” Up/Down button (1).
• ⏶: Hold down the Up button for 1 second or longer to fast forward the track.
• ⏷: Hold down the Down button for 1 second or longer to fast rewind the track.
• Releasing the button can stop the fast forwarding/rewinding.

Selecting a track
1) Touch the “TUNE/TRACK” Up/Down button (1).
• ⏶: Touch the Up button to listen to the next track.
• ⏷: When the Down button is touched once, the track currently being played will start from the beginning again. Touch the Down button twice to listen to the previous track.

Selecting a folder
1) Touch the “FLD” (folder operation) button (4).
2) Touch the “TUNE/TRACK” Up/Down button (1).
• ⏶: Touch the Up button to move to the next folder.
• ⏷: Touch the Down button to move to the previous folder.

Repeat playback
1) Touch the SETUP (random/repeat) button (5).
2) Touch or slide the “TUNE/TRACK” Up/Down button (1), select “Repeat”, and touch the “DISP/ENTER” button (2).
• Each time the “DISP/ENTER” button (2) is touched, the mode will change as follows:
Off → Folder random → All random ...

Random playback
1) Touch the SETUP (random/repeat) button (5).
2) Touch or slide the “TUNE/TRACK” Up/Down button (1), select “Random”, and touch the “DISP/ENTER” button (2).
Each time the “DISP/ENTER” button (2) is touched, the mode will change as follows:
Off → Folder random → All random ...

Display change
1) Touch the “DISP/ENTER” button (2).
• Each time the button is touched, display will change as follows:
MP3/AAC:
Artist name/Track title → Album name/Track title → Folder name/File name...
WMA:
Artist name/Track title → Folder name/File name...

NOTE:
• *“NO TITLE” will be displayed when there is no text information in the USB device currently being played.*
• *“...” is displayed if all text data cannot be displayed. Touch and hold the “DISP/ENTER” button (2) for at least 1 second to automatically display the rest of the text data.*

Notes on USB device
Compatible USB devices
- USB Mass Storage Class
  For details as to whether your USB memory/USB Audio is compatible with USB Mass Storage Class, please contact the USB memory/USB Audio manufacturer.
- Audio file
  MP3 (.mp3)/WMA (.wma)/AAC (.m4a)/ AAC (.aac)
- File System
  FAT 12/16/32,VFAT (supporting long file name)
- USB Standard Compatibility
  1.1/2.0 Full Speed
- If a USB hub or extension cable is connected to the audio system, it may not be recognized. In this case, directly connect the USB device to the audio system.
- Devices such as MP3 players/mobile phones/digital cameras may not be recognized as audio systems for playing music.

USB device connection
- When connecting a USB device, make sure that the connector is pushed all the way into the port.
- Depending on the USB flash drive that you are using, (non-brand product, USB flash drive that has been externally damaged) it may disable connection or cause unstable operation.
- Do not leave the USB device for long periods of time in places inside the vehicle where the temperature can rise too high.
- Back up any important data beforehand. We cannot accept responsibility for any lost data.
- It is recommended not to connect a USB device that contains data files other than MP3/WMA format.

Recording MP3/WMA/AAC files on a USB device
- Playback or display may not be possible depending on the type of USB device in use or the condition of the recording.
- Depending on the connected USB memory, the files may be played in different order from the order that the files were stored.
- The DRM (Digital Rights Management) file cannot be played.

Compression formats
MP3
- Bit rate
  MPEG1 Audio Layer III: 32 up to 320 kbps
  MPEG2 Audio Layer III: 8 up to 160 kbps
  MPEG2.5 Audio Layer III: 8 up to 160 kbps
  VBR: up to 384 kbps (MAX.)
- Sampling frequency
  MPEG1 Audio Layer III: 32/44.1/48 kHz
  MPEG2 Audio Layer III: 16/22.05/24 kHz
  MPEG2.5 Audio Layer III: 8/11.025/12 kHz
- Channel
  Stereo/Joint stereo/Dual channel/Monaural
- ID3 tag
  ID3v1.x/ID3v2.x

WMA
- Windows Media Audio Ver.7/Ver.8/Ver.9 Standard compliant
- Bit rate: 32 up to 320 kbps
- VBR: up to 384 kbps (MAX.)
- Sampling frequency: 32/44.1/48 kHz
- WMA tag: Ver.8.0
- Channel: 2 Channels

AAC
- Bit rate: 16 up to 320 kbps
- VBR: up to 320 kbps (MAX.)
- Sampling frequency: 32/44.1/48 kHz
- AAC tag: iTunes m4a metadata

Maximum number of files/folders
- Maximum number of files: 2500
- Maximum number of files in a folder: 255
- Maximum number of folders: 255
  – Root folder and empty folder are included.
- Maximum depth of tree structure: 8

NOTICE
Never use ".mp3", ".wma" or ".m4a" as a file name extension if it is not in the MP3/WMA/AAC format file. Failure to observe this may result in damage to the speaker due to noise production.

iPod

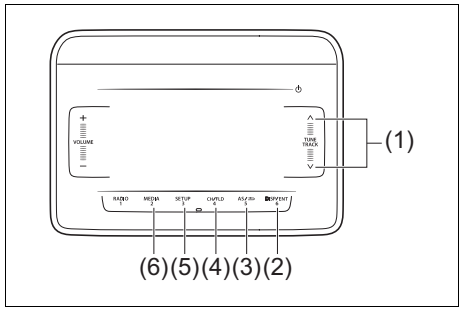

73R0141

(1) "TUNE/TRACK" Up/Down button
(2) "DISP/ENTER" button
(3) BACK button
(4) "FLD" (iPod menu) button
(5) SETUP (shuffle/repeat) button
(6) "MEDIA" button

Display

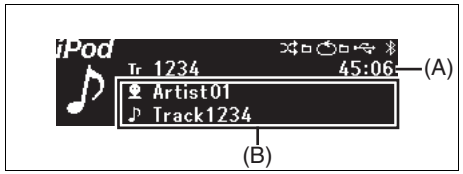

73R0143

(A) Play time
(B) Text information display

Selecting an iPod mode
1) Touch the "MEDIA" button (6).
- Each time the button is touched, the mode will change as follows:
  USB (iPod) (if equipped) → Bluetooth® audio (if equipped) → AUX (if equipped)

Fast forwarding/Rewinding a track
1) Hold down the "TUNE/TRACK" Up/Down button (1).
- ^ : Hold down the Up button for 1 second or longer to fast forward the track.
- v : Hold down the Down button for 1 second or longer to fast rewind the track.
- Releasing the button can stop the fast forwarding/rewinding.

Selecting a track
1) Touch the "TUNE/TRACK" Up/Down button (1).
- ^ : Touch the Up button to listen to the next track.
- v : When the Down button is touched once, the track currently being played will start from the beginning again. Touch the Down button twice to listen to the previous track.

Select a category
1) Touch the “FLD” (iPod menu) button (4).
2) Touch or slide the “TUNE/TRACK” Up/Down button (1), select the desired category, and touch the “DISP/ENTER” button (2).

• The Song selection mode for each category will be displayed as follows.
  – Playlists: Playlists → Songs
  – Artists: Artists → Albums → Songs
  – Songs: Songs
  – Genres: Genres → Artists → Albums → Songs
  – Radio: Station
  – Audiobooks: Audiobooks
  – Podcasts: Podcasts → Episodes
  – i Tunes U: i Tunes U → Episodes

NOTE:
Categories is not displayed if the no files in the category.

Repeat playback
1) Touch the SETUP (shuffle/repeat) button (5).
2) Touch or slide the “TUNE/TRACK” Up/Down button (1), select “Repeat”, and touch the “DISP/ENTER” button (2).

• Touch the “DISP/ENTER” button (2). Each time the button is touched, display will change as follows:
  The repeat mode will vary depending on your device.
  Off → 1 song repeat → All repeat ...

Random playback
1) Touch the SETUP (shuffle/repeat) button (5).
2) Touch or slide the “TUNE/TRACK” Up/Down button (1), select “Shuffle”, and touch the “DISP/ENTER” button (2).

• Touch the “DISP/ENTER” button (2). Each time the button is touched, display will change as follows:
  Off → Shuffle → Album shuffle ...

Display change
1) Touch the “DISP/ENTER” button (2).

• Each time the button is touched, display will change as follows:
  Artist name/Track title → Album name/Track title → Playlist name/Track title...

NOTE:
• *“NO TITLE” is displayed if the file currently being played has no text data.*
• *“...” is displayed if all text data cannot be displayed. Touch and hold the* “DISP/ENTER” button *(2) for at least one second to automatically display the rest of the text data.*
• *“Playlist name/song name” is only displayed by the* “*FLD*” *(Menu) button (4) when music is selected from Playlists.*

Notes on iPod
Made for iPod
• iPod nano :
  – iPod nano (7th generation)
• iPod touch :
  – iPod touch (6th generation)
• i Pod touch (5th generation)
• iPhone :
  – i Phone 5
  – i Phone 5s
  – i Phone 5c
  – i Phone 6
  – i Phone 6 Plus
  – i Phone 6s
  – i Phone 6s Plus
  – i Phone SE
  – i Phone 7
  – i Phone 7 Plus

NOTE:
Some functions may not be available depending on the model of iPod.

iPod



73R0217

- Use of the Made for Apple badge means that an accessory has been designed to connect specifically to the Apple product(s) identified in the badge, and has been certified by the developer to meet Apple performance standards. Apple is not responsible for the operation of this device or its compliance with safety and regulatory standards.
- Please note that the use of this accessory with an Apple product may affect wireless performance.
- Apple, iPod nano, iPod touch, iPhone, and Lightning are trademarks of Apple Inc., registered in the U.S. and other countries.

AUX

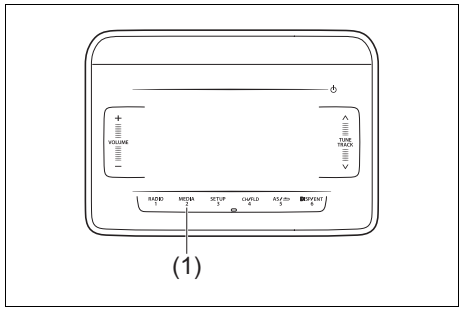

73R0145

(1) “MEDIA” button

Display



73R0146

NOTICE

- **Before connection, mute the unit, and also keep the volume of the auxiliary audio source within a range that will not cause distortion.**
- **When the audio source is turned off, noise may be emitted. Be sure to turn off the unit or switch to another mode before turning off the audio source.**

AUX selection

1) Touch the “MEDIA” button (1).
- Each time the button is touched, the mode will change as follows:
  USB (iPod) (if equipped) → Bluetooth® audio (if equipped) → AUX (if equipped)

NOTE:
- *Please consult your place of purchase for details about whether a given auxiliary audio source can be connected and the proper auxiliary cord to use.*

Setting of Bluetooth® Devices

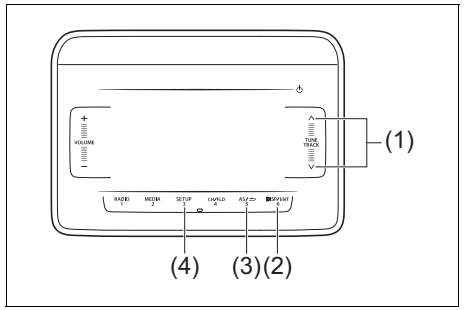

73R0147

Steering switch (if equipped)

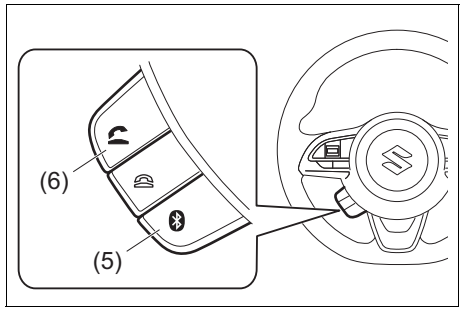

73R0148

(1) “TUNE/TRACK” Up/Down button
(2) “ENTER” button
(3) BACK button
(4) SETUP button
(5) Bluetooth® button
(6) Off-hook button

⚠ CAUTION

Do not register or set the Bluetooth® device while driving. Stop your vehicle in a safe area before registering the device.

Registration of Bluetooth® devices
To use Bluetooth® devices (Bluetooth® audio or mobile phone) on the audio system, it is required to register the Bluetooth® devices to the audio system. Up to 5 Bluetooth® devices can be registered.

NOTE:
- *Certain functions cannot be used depending on the Bluetooth® device.*
- *Refer to the user manual included with your device regarding the operation method of Bluetooth® devices.*
- *If the pairing cannot be established, the connection operation is canceled. For the Bluetooth® device pairing method, refer to the user manual included with your device or try pairing again.*

1) The Bluetooth® setting screen will be displayed.
- From the panel button:
  Touch the SETUP button (4).
  Touch or slide the “TUNE/TRACK” Up/Down button (1), select “Bluetooth”, and touch the “ENTER” button (2).
- From the steering switch
  Press the Bluetooth® button (5).

2) Touch or slide the “TUNE/TRACK” Up/Down button (1), select “Setup Bluetooth”, and touch the “ENTER” button (2).
3) Touch or slide the “TUNE/TRACK” Up/Down button (1), select “Pairing”, and touch the “ENTER” button (2).
- The passkey will be displayed.

4) Operate and register the Bluetooth® device.
   Secure Simple Pairing (SSP) incompatible Bluetooth® device:
   Enter the passkey into the Bluetooth® device.
   Secure Simple Pairing (SSP) compatible Bluetooth® device:
   Select “Yes” to register the Bluetooth® device.
- It is possible to automatically register devices depending on the type of Bluetooth® device.

NOTE:
- *If the Bluetooth® device contains music player and mobile phone function, both functions will be registered simultaneously. When deleting a Bluetooth® device, both functions will be deleted simultaneously.*
- *If a mobile phone is not registered and the off-hook button (6) is pressed and the telephone mode is selected, it will automatically switch to "Pairing".*
- *When pairing with a mobile phone is established, it is possible to automatically transfer the phonebook and call history. If you wish to conduct an automatic transfer press "YES" and if not, press "NO".*

Set from the list of mobile phones

The list of paired mobile phones is displayed and the various settings can be changed.

1) The Bluetooth® setting screen will be displayed.
- From the panel button:
  Touch the SETUP button (4).
  Touch or slide the "TUNE/TRACK" Up/Down button (1), select "Bluetooth", and touch the "ENTER" button (2).
- From the steering switch:
  Press the Bluetooth® button (5).

2) Touch or slide the "TUNE/TRACK" Up/Down button (1), select "Setup Bluetooth", and touch the "ENTER" button (2).
3) Touch or slide the "TUNE/TRACK" Up/Down button (1), select "List Phone", and touch the "ENTER" button (2).

Connect a registered mobile phone

1) Touch or slide the "TUNE/TRACK" Up/Down button (1) from the "List Phone" screen, select the name of the desired mobile phone, and touch the "ENTER" button (2).
2) Touch or slide the "TUNE/TRACK" Up/Down button (1), select "Select", and touch the "ENTER" button (2).

Disconnect a connected mobile phone

1) Touch or slide the "TUNE/TRACK" Up/Down button (1) from the "List Phone" screen, select the name of the desired mobile phone, and touch the "ENTER" button (2).
2) Touch or slide the "TUNE/TRACK" Up/Down button (1), select "Disconnect", and touch the "ENTER" button (2).
3) Touch or slide the "TUNE/TRACK" Up/Down button (1), select "YES", and touch the "ENTER" button (2).

Delete a registered mobile phone

1) Touch or slide the "TUNE/TRACK" Up/Down button (1) from the "List Phone" screen, select the name of the desired mobile phone, and touch the "ENTER" button (2).
2) Touch or slide the "TUNE/TRACK" Up/Down button (1), select "Delete", and touch the "ENTER" button (2).
3) Touch or slide the "TUNE/TRACK" Up/Down button (1), select "YES", and touch the "ENTER" button (2).

Set from the Bluetooth® audio list
The list of paired Bluetooth® audio is displayed and the various settings can be changed.
1) The Bluetooth® setting screen will be displayed.
- From the panel button:
  Touch the SETUP button (4).
  Touch or slide the “TUNE/TRACK” Up/Down button (1), select “Bluetooth”, and touch the “ENTER” button (2).
- From the steering switch:
  Press the Bluetooth® button (5).

2) Touch or slide the “TUNE/TRACK” Up/Down button (1), select “Setup Bluetooth”, and touch the “ENTER” button (2).
3) Touch or slide the “TUNE/TRACK” Up/Down button (1), select “List Audio”, and touch the “ENTER” button (2).

Connect a registered Bluetooth® audio
1) Touch or slide the “TUNE/TRACK” Up/Down button (1) from the “List Audio” screen, select the name of the desired Bluetooth® audio, and touch the “ENTER” button (2).
2) Touch or slide the “TUNE/TRACK” Up/Down button (1), select “Select”, and touch the “ENTER” button (2).

Disconnect a registered Bluetooth® audio
1) Touch or slide the “TUNE/TRACK” Up/Down button (1) from the “List Audio” screen, select the name of the desired Bluetooth® audio, and touch the “ENTER” button (2).
2) Touch or slide the “TUNE/TRACK” Up/Down button (1), select “Disconnect”, and touch the “ENTER” button (2).
3) Touch or slide the “TUNE/TRACK” Up/Down button (1), select “YES”, and touch the “ENTER” button (2).

Delete a registered Bluetooth® audio
1) Touch or slide the “TUNE/TRACK” Up/Down button (1) from the “List Audio” screen, select the name of the desired Bluetooth® audio, and touch the “ENTER” button (2).
2) Touch or slide the “TUNE/TRACK” Up/Down button (1), select “Delete”, and touch the “ENTER” button (2).
3) Touch or slide the “TUNE/TRACK” Up/Down button (1), select “YES”, and touch the “ENTER” button (2).

Select a connection method
It is possible to switch connection methods when the Bluetooth® audio is registered to the audio system and the audio system and Bluetooth® audio are not connected.
1) Touch or slide the “TUNE/TRACK” Up/Down button (1) from the “List Audio” screen, select the name of the desired Bluetooth® audio, and touch the “ENTER” button (2).
2) Touch or slide the “TUNE/TRACK” Up/Down button (1), select “Connect Method”, and touch the “ENTER” button (2).
3) Touch or slide the “TUNE/TRACK” Up/Down button (1), select the connection method, and touch the “ENTER” button (2).
- From Vehicle:
  Operate from the audio system to connect to the Bluetooth® device.
- From Audio:
  Operate from the Bluetooth® device to connect to the audio system.

Change of Passkey
1) The Bluetooth® setting screen will be displayed.
- From the panel button:
  Touch the SETUP button (4).
  Touch or slide the “TUNE/TRACK” Up/Down button (1), select “Bluetooth”, and touch the “ENTER” button (2).
- From the steering switch
  Press the Bluetooth® button (5).
2) Touch or slide the “TUNE/TRACK” Up/Down button (1), select “Setup Bluetooth”, and touch the “ENTER” button (2).
3) Touch or slide the “TUNE/TRACK” Up/Down button (1), select “Passkey”, and touch the “ENTER” button (2).
4) Touch or slide the “TUNE/TRACK” Up/Down button (1), select “YES”, and touch the “ENTER” button (2).
5) Touch or slide the “TUNE/TRACK” Up/Down button (1), select a number between 0 and 9, and touch the “ENTER” button (2).
   Repeat this operation several times.
- Enter the passkey one digit by one digit.
- The passkey must be between 4 to 8 digits.
- In order to cancel the number that you entered and return to the previous digit, touch the BACK button (3).
- If you do not enter a number that is 4 or more digits and re-touch the “ENTER” button (2), the passkey will be registered.

Automatic connection with the Bluetooth® device
If the “Bluetooth Power” is set to ON, turning the ignition switch to ACC will automatically connect the registered Bluetooth® device.
- With the automatic connection, the Bluetooth® device that was connected last will be prioritized.

1) The Bluetooth® setting screen will be displayed.
- From the panel button:
  Touch the SETUP button (4).
  Touch or slide the “TUNE/TRACK” Up/Down button (1), select “Bluetooth”, and touch the “ENTER” button (2).
- From the steering switch:
  Press the Bluetooth button (5).
2) Touch or slide the “TUNE/TRACK” Up/Down button (1), select “Setup Bluetooth”, and touch the “ENTER” button (2).
3) Touch or slide the “TUNE/TRACK” Up/Down button (1), select “Bluetooth Power”, and touch the “ENTER” button (2).
- Touch or slide the “TUNE/TRACK” Up/Down button (1), select “On” or “Off”, and touch the “ENTER” button (2).

NOTE:
- *When “Bluetooth Power” is set to “OFF”, the audio system disconnects from the registered Bluetooth® device.*
- *If “Bluetooth Power” is set to “Off”, the audio system will not automatically reconnect the next time the ignition is switched on.*

The device status will be displayed

1) The Bluetooth® setting screen will be displayed.
- From the panel button:
  Touch the SETUP button (4).
  Touch or slide the “TUNE/TRACK” Up/Down button (1), select “Bluetooth”, and touch the “ENTER” button (2).
- From the steering switch:
  Press the Bluetooth button (5).

2) Touch or slide the “TUNE/TRACK” Up/Down button (1), select “Setup Bluetooth”, and touch the “ENTER” button (2).
3) Touch or slide the “TUNE/TRACK” Up/Down button (1), select “Bluetooth Info”, and touch the “ENTER” button (2).
4) Touch or slide the “TUNE/TRACK” Up/Down button (1), select the desired status, and touch the “ENTER” button (2).

- To display the device name, select “Device Name”.
- To display the device address, select “Device Address”.

Initialize

It is possible to initialize the audio system’s Bluetooth® settings or device information.

⚠ CAUTION

- **Do not initialize the settings while driving. Stop your vehicle in a safe area before initializing the device.**
- **Initialize with caution. Initialized settings and history cannot be restored.**

1) The Bluetooth® setting screen will be displayed.
- From the panel button:
  Touch the SETUP button (4).
  Touch or slide the “TUNE/TRACK” Up/Down button (1), select “Bluetooth”, and touch the “ENTER” button (2).
- From the steering switch:
  Press the Bluetooth button (5).

2) Touch or slide the “TUNE/TRACK” Up/Down button (1), select “Setup Bluetooth”, and touch the “ENTER” button (2).
3) Touch or slide the “TUNE/TRACK” Up/Down button (1), select “Initialize”, and touch the “ENTER” button (2).
4) Touch or slide the “TUNE/TRACK” Up/Down button (1), select the item that you want to initialize item, and touch the “ENTER” button (2).
- HF Sound Setting:
  – Reception/ringtone volume
  – Incoming call volume
- Vehicle Device Info:
  Passkey
- All Initialize:
  – Reception/ringtone volume
  – Incoming call volume
  – Bluetooth audio volume
  – Pairing registration
  – Phonebook/history
  – Speed dial
  – Connect Method
  – Bluetooth Power
  – Auto Transfer

5) Touch or slide the “TUNE/TRACK” Up/Down button (1), select “YES”, and touch the “ENTER” button (2).

Notes on Bluetooth®

73R0209

- The Bluetooth® word mark and logos are registered trademarks owned by Bluetooth SIG, Inc. and any use of such marks by Denso Ten Limited is under license. Other trademarks and trade names are those of their respective owners.
  This telecommunication equipment conforms to the requirements of the National Telecommunications Commission.
- Stop using this unit and a Bluetooth® ready device whenever requested.
  This unit shares the communication frequency with other private or public wireless communication equipment such as a wireless LAN and other wireless communication radios.
  You should stop using this unit immediately whenever you are notified that your unit disturbs other wireless communication.

Profile

- SSP (Secure Simple Pairing)
- PBAP (Phone Book Access Profile)
- OPP (Object Push Profile)
- HFP (Hand-Free Profile)
- A2DP (Advanced Audio Distribution Profile)
- AVRCP (Audio/Video Remote Control Profile)

Bluetooth® Hands-free (if equipped)

To use Bluetooth® devices (Bluetooth® audio or mobile phone) on the audio system, it is required to register the Bluetooth® devices to the audio system by “Bluetooth Settings”.

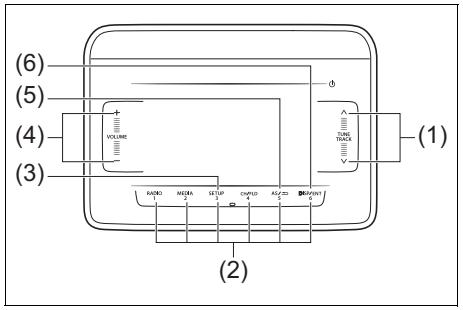

73R0150

Display

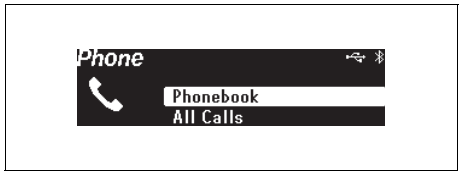

73R0151

Steering switch

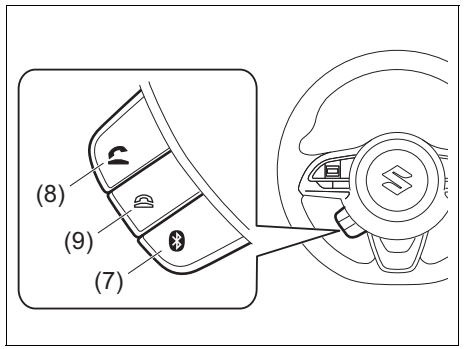

73R0152

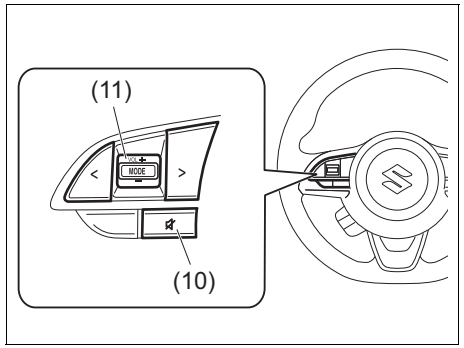

73R0153

(1) “TUNE/TRACK” Up/Down button
(2) Speed dial button (1-6)
(3) SETUP button
(4) “VOLUME” button
(5) BACK button
(6) “ENTER” button
(7) Bluetooth® setting button
(8) Off-hook button
(9) On-hook button
(10) Mute button
(11) “VOL” (volume) button

NOTICE

- **Do not leave your mobile phone inside your vehicle. If the temperature inside the vehicle increases, it may damage your mobile phone.**
- **When disposing your vehicle, make sure to delete all personal information saved to the audio system.**
- **The following hands-free data must be deleted from the audio system.**
  - **Speed dial**
  - **Reception history/Incoming call history**
  - **Bluetooth® phonebook data**

NOTE:

- *Please keep your phone volume low. The person’s voice who you are talking to may be heard outside of the vehicle and increase the voice echo. When talking on the phone, speak clearly towards the microphone.*
- *In the following cases, your voice may not be heard clearly by the person on the other line:*
  - *When driving on unpaved roads. (If there is loud traffic noise.)*
  - *When driving at high speeds.*
  - *When driving with the window open.*
  - *If the air conditioner is blowing directly towards the microphone.*
  - *When the sound of the air conditioner fan is loud.*
  - *When there is an adverse effect to the sound quality of the phone or network that you are using.*
- *The audio system may not function under the following conditions.*
  - *When the phone power is not turned on.*
  - *When the mobile phone is out of service.*
  - *When the mobile phone is not connected.*
  - *When the mobile phone battery is low*
- *The Bluetooth’s hands-free operation is dependent upon the mobile phone’s compatibility.*

- *The Bluetooth's hands-free performance is affected by the driving conditions of mobile phone networks, handsets and vehicles.*
- *The audio system's performance may be restricted due to the model of your mobile phone.*

It is possible to register a mobile phone and register the phone number to the audio system as follows:
- *Up to 1,000 phone numbers can be saved for every registered mobile phone.*
- *Up to 30 phone numbers can be saved to the call history menu (missed calls/ incoming/outgoing calls.)*
  – *When the call history exceeds 30 calls, they are deleted from the oldest one first, and the latest call history information is displayed in descending order.*
- *Up to 6 phone numbers can be saved to the speed dial list.*

Answer the phone
1) Press the off-hook button (8).
- When you press the on-hook button (9) during an incoming call, you can block the call. (Only for compatible phone units)

NOTE:
- *If you receive a call from a registered phone, the caller's name will appear on the screen.*
- *If you receive a call from an unregistered phone, only the caller's phone number will appear on the screen.*

Hang up the phone
1) When the call is finished, press the on-hook button (9).

Make a call on call waiting
When the screen is displayed during a call, it is possible to hold the call and answer the other incoming call.
1) When an incoming call is received during a call, press the off-hook button (8).
- When the call is on hold, it will connect to the other incoming call.
- To end the call waiting, press the off-hook button (8).
- When the call waiting is completed, the call on hold will connect.
- When switching the caller, press the off-hook button (8) again while using the call waiting.

NOTE:
This function can only be used with phone units that are compatible with call waiting.

Mute the ringtone volume
1) Press the mute button (10).
- To deactivate the mute volume, press the mute button (10).

Adjust the volume
Adjust the reception volume
1) Touch or slide the “VOLUME” button (4) or press the “VOL” button (11) during a call.
- To increase the volume, touch ✚ or slide upwards.
- To decrease the volume, touch ▬ or slide downwards.

NOTE:
The volume and microphone sensitivity settings vary depending on the specifications of each mobile phone.

Adjust the ringtone volume
1) Touch or slide the “VOLUME” button (4) or press the “VOL” button (11) during an incoming call.
- To increase the volume, touch ✚ or slide upwards.
- To decrease the volume, touch ▬ or slide downwards.

Adjust the volume with the Bluetooth® settings
1) Display the Bluetooth® setup menu.
- From the panel button:
  Touch the SETUP button (3).
  Touch or slide the “TUNE/TRACK” Up/Down button (1), select “Bluetooth”, and touch the “ENTER” button (6).
- From the steering switch:
  Press the Bluetooth® button (7).
2) Touch or slide the “TUNE/TRACK” Up/Down button (1), select “Setup Telephone”, and touch the “ENTER” button (6).
3) Touch or slide the “TUNE/TRACK” Up/Down button (1), select “HF Sound Setting”, and touch the “ENTER” button (6).
4) Touch or slide the “TUNE/TRACK” Up/Down button (1), select the item that you want to adjust, and touch the “ENTER” button (6).
- Call Volume: Reception/ringtone volume
- Ringtone Volume: Incoming call volume
5) Touch or slide the “VOLUME” button (4).
- To increase the volume, touch ✚ or slide upwards.
- To decrease the volume, touch ▬ or slide downwards.

Make a call
Press the off-hook button (8) to enter the telephone mode.

Use the phonebook
1) Touch or slide the “TUNE/TRACK” Up/Down button (1), select “Phonebook”, and touch the “ENTER” button (6).
2) Touch or slide the “TUNE/TRACK” Up/Down button (1), select the desired initials, and touch the “ENTER” button (6).
3) Touch or slide the “TUNE/TRACK” Up/Down button (1), select the contact number, and touch the “ENTER” button (6).
- If there are multiple phone numbers for a single contact, touch or slide the “TUNE/TRACK” Up/Down button (1), select the phone number, and touch the “ENTER” button (6).
4) Touch or slide the “TUNE/TRACK” Up/Down button (1), select “Yes”, and touch the “ENTER” button (6) or press the off-hook button (8).

Use the call history

1) Touch or slide the “TUNE/TRACK” Up/Down button (1), select “All Calls,” “Missed Calls”, “Incoming Calls” or “Outgoing Calls” and touch the “ENTER” button (6).
2) Touch or slide the “TUNE/TRACK” Up/Down button (1), select the contact number, and touch the “ENTER” button (6).
3) Touch or slide the “TUNE/TRACK” Up/Down button (1), select “Yes”, and touch the “ENTER” button (6) or press the off-hook button (8).

Use the speed dial

1) Press the Off-hook button (8) for 1 second or longer.
2) Touch the desired speed dial button (2) (1-6).
3) Touch or slide the “TUNE/TRACK” Up/Down button (1), select “YES”, and then touch the “ENTER” button (6) or press the Off-hook button (8).

NOTE:
Speed dial numbers must be registered before this function can be used.

Transfer/delete the phonebook

1) Display the Bluetooth® setup menu.
- From the panel button:
  Touch the SETUP button (3).
  Touch or slide the “TUNE/TRACK” Up/Down button (1), select “Bluetooth”, and touch the “ENTER” button (6).
- From the steering switch:
  Press the Bluetooth® button (7).

2) Touch or slide the “TUNE/TRACK” Up/Down button (1), select “Setup Telephone”, and touch the “ENTER” button (6).
3) Touch or slide the “TUNE/TRACK” Up/Down button (1), select “Setup Phonebook”, and touch the “ENTER” button (6).

Transfer all contacts from your mobile phone

1) Touch or slide the “TUNE/TRACK” Up/Down button (1) from the “Setup Phonebook” screen, select “Add Contacts”, and touch the “ENTER” button (6).
2) Touch or slide the “TUNE/TRACK” Up/Down button (1), select “Overwrite All”, and touch the “ENTER” button (6).
3) Touch or slide the “TUNE/TRACK” Up/Down button (1), select “YES”, and touch the “ENTER” button (6).

Transfer 1 contact from your mobile phone

1) Touch or slide the “TUNE/TRACK” Up/Down button (1) from the “Setup Phonebook” screen, select “Add Contacts”, and touch the “ENTER” button (6).
2) Touch or slide the “TUNE/TRACK” Up/Down button (1), select “Add One Contact”, and touch the “ENTER” button (6).
3) Touch or slide the “TUNE/TRACK” Up/Down button (1), select “YES”, and touch the “ENTER” button (6).

Delete the registered phonebook

1) Touch or slide the “TUNE/TRACK” Up/Down button (1) from the “Setup Phonebook” screen, select “Delete Contacts”, and touch the “ENTER” button (6).
2) Touch or slide the “TUNE/TRACK” Up/Down button (1), select the desired initials from the list or “All”, and touch the “ENTER” button (6).
- When you select “All”, it will transition to step 4.

3) Touch or slide the “TUNE/TRACK” Up/Down button (1), select the desired name from the list, and touch the “ENTER” button (6).
4) Touch or slide the “TUNE/TRACK” Up/Down button (1), select “YES”, and touch the “ENTER” button (6).

Transfer/delete the call history

1) Display the Bluetooth® setup menu.
- From the panel button:
  Touch the SETUP button (3).
  Touch or slide the “TUNE/TRACK” Up/Down button (1), select “Bluetooth”, and touch the “ENTER” button (6).
- From the steering switch:
  Press the Bluetooth® button (7).

2) Touch or slide the “TUNE/TRACK” Up/Down button (1), select “Setup Telephone”, and touch the “ENTER” button (6).
3) Touch or slide the “TUNE/TRACK” Up/Down button (1), select “Setup Call History”, and touch the “ENTER” button (6).

Transfer the call history

1) Touch or slide the “TUNE/TRACK” Up/Down button (1) from the “Setup Call History” screen, select “Overwrite History”, and touch the “ENTER” button (6).
2) Touch or slide the “TUNE/TRACK” Up/Down button (1), select “YES”, and touch the “ENTER” button (6).

Delete the call history

1) Touch or slide the “TUNE/TRACK” Up/Down button (1) from the “Setup Call History” screen, select “Delete History”, and touch the “ENTER” button (6).
2) Touch or slide the “TUNE/TRACK” Up/Down button (1), select “All Calls”, “Missed Calls”, “Incoming Calls” or “Outgoing Calls” and touch the “ENTER” button (6).
3) Touch or slide the TUNE/TRACK Up/Down button (1), select the desired data from the history or select “All“, and then touch the “ENTER” button (6).
4) Touch or slide the “TUNE/TRACK” Up/Down button (1), select “YES”, and touch the “ENTER” button (6).

Registration / deletion of speed dial

1) Display the Bluetooth® setup menu.
- From the panel button:
  Touch the SETUP button (3).
  Touch or slide the “TUNE/TRACK” Up/Down button (1), select “Bluetooth”, and touch the “ENTER” button (6).
- From the steering switch:
  Press the Bluetooth® button (7).

2) Touch or slide the “TUNE/TRACK” Up/Down button (1), select “Setup Telephone”, and touch the “ENTER” button (6).
3) Touch or slide the “TUNE/TRACK” Up/Down button (1), select “Setup Speed Dials”, and touch the “ENTER” button (6).

Registration in speed dial

1) Touch or slide the “TUNE/TRACK” Up/Down button (1) from the “Setup Speed Dials” screen, select “Add Speed Dial”, and touch the “ENTER” button (6).
2) Touch or slide the “TUNE/TRACK” Up/Down button (1), select the phonebook or call history, and touch the “ENTER” button (6).

• When you select the call history, it will transition to step 4.

3) Touch or slide the “TUNE/TRACK” Up/Down button (1), select the desired initials from the list and touch the “ENTER” button (6).
4) Touch or slide the “TUNE/TRACK” Up/Down button (1), select the contact number, and touch the “ENTER” button (6).

• If there are multiple phone numbers for a single contact, touch or slide the “TUNE/TRACK” Up/Down button (1), select the phone number, and touch the “ENTER” button (6).

5) Touch or slide the “TUNE/TRACK” Up/Down button (1), select the speed dial number that you want to register, and touch the “ENTER” button (6).

Deletion of speed dial

1) Touch or slide the “TUNE/TRACK” Up/Down button (1) from the “Setup Speed Dials” screen, select “Delete Speed Dials”, and touch the “ENTER” button (6).
2) Touch or slide the “TUNE/TRACK” Up/Down button (1), select the speed dial number that you want to delete, and touch the “ENTER” button (6).
3) Touch or slide the “TUNE/TRACK” Up/Down button (1), select “YES”, and touch the “ENTER” button (6).

Automatic transfer of the phonebook/call history

When registering the mobile phone, you can select to automatically transfer the phonebook and call history from your device. Select according to the following steps.

1) Display the Bluetooth® setup menu.

• From the panel button:
Touch the SETUP button (3).
Touch or slide the “TUNE/TRACK” Up/Down button (1), select “Bluetooth”, and touch the “ENTER” button (6).

• From the steering switch:
Press the Bluetooth® button (7).

2) Touch or slide the “TUNE/TRACK” Up/Down button (1), select “Setup Telephone”, and touch the “ENTER” button (6).
3) Touch or slide the “TUNE/TRACK” Up/Down button (1), select “Auto Transfer”, and touch the “ENTER” button (6).
4) Touch or slide the “TUNE/TRACK” Up/Down button (1), select “On” or “Off”, and touch the “ENTER” button (6).

Bluetooth® Audio

To use Bluetooth® devices (Bluetooth® audio or mobile phone) on the audio system, it is required to register the Bluetooth® devices to the audio system by "Bluetooth® Settings".

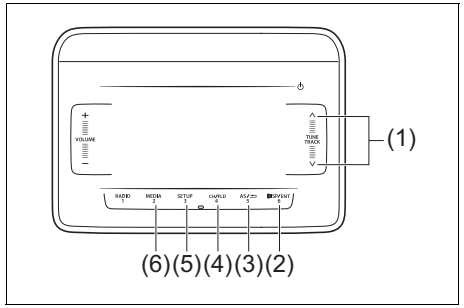

73R0141

(1) "TUNE/TRACK" Up/Down button
(2) "DISP/ENTER" button
(3) BACK button
(4) "FLD" (group operation) button
(5) SETUP (random/repeat) button
(6) "MEDIA" button

Display

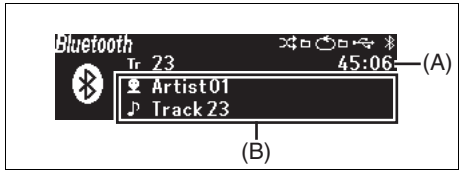

73R0154

(A) Playback time
(B) Text information display

NOTE:
Some functions may not be usable on some Bluetooth® devices.

Selecting the Bluetooth® audio

1) Touch the "MEDIA" button (6).
- Touch the "MEDIA" button (6). Each time the button is touched, the mode will change as follows:
  USB (iPod) (if equipped) → Bluetooth® audio (if equipped) → AUX (if equipped)

Fast forwarding/Rewinding a track

1) Hold down the "TUNE/TRACK" Up/Down button (1).
- ^ : Hold down the Up button for 1 second or longer to fast forward the track.
- v : Hold down the Down button for 1 second or longer to fast rewind the track.
- Releasing the button can stop the fast forwarding/rewinding.

Selecting a track

1) Touch the "TUNE/TRACK" Up/Down button (1).
- ^ : Touch the Up button to listen to the next track.
- v : When the Down button is touched once, the track currently being played will start from the beginning again. Touch the Down button twice to listen to the previous track.

Selecting a group (only for supported models)

1) Touch the "FLD" (group operation) button (4).
2) Touch the "TUNE/TRACK" Up/Down button (1).
- ^ : Touch the Up button to go to the next group.
- v : Touch the Down button to go to the previous group.

Repeat playback
1) Touch the SETUP (random/repeat) button (5).
2) Touch or slide the “TUNE/TRACK” Up/Down button (1), select “Repeat”, and touch the “DISP/ENTER” button (2).

• Each time the “DISP/ENTER” button (2) is touched, display will change as follows:
Off → One song repeat → Group repeat ...

Random playback
1) Touch the SETUP (random/repeat) button (5).
2) Touch or slide the “TUNE/TRACK” Up/Down button (1), select “Random”, and touch the “DISP/ENTER” button (2)

• Each time the “DISP/ENTER” button (2) is touched, display will change as follows:
Off → One song repeat →
Group repeat

Display change
1) Touch the “DISP/ENTER” button (2).

• Each time the button is touched, display will change as follows:
Artist name/Track title → Album name/Track title...

NOTE:
- *“NO TITLE” will be displayed when there is no text information in the USB device currently being played.*
- *“...” is displayed if all text data cannot be displayed. Touch and hold the “DISP/ENTER” button (2) for at least one second to automatically display the rest of the text data.*

Anti-Theft Feature

The anti-theft function is intended to discourage thefts, such as that the audio system becomes inoperable when it is installed on other vehicles.
This function works by entering a Personal Identification Number (PIN).
When the unit is disconnected from its power source, such as when the audio system is removed or the battery is disconnected, the unit will become inoperable until the PIN is reentered.

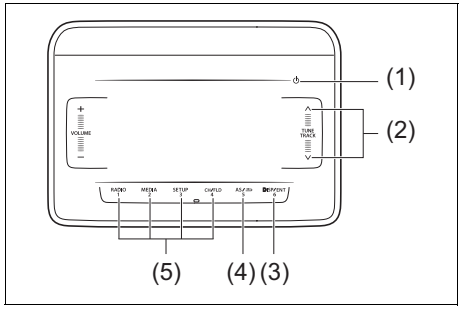

73R0155

(1) POWER button
(2) List selection button
(3) “ENTER” button
(4) BACK button
(5) PIN entry button (1-4)

Display

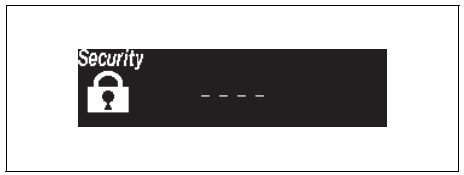

73R0156

Setting the Anti-Theft Function

1) Touch the POWER button (1) for 1 second or longer to power off the audio system.
2) Hold down the button numbered [1] of the PIN entry button (5) and the "ENTER" button (3) and touch the POWER button (1).
• "SECURITY" will be displayed.
3) Hold down the Up button of the List selection button (2) ^ and the button numbered [1] of the PIN entry button (5).
• "----" will be displayed.
4) Enter a 4-digit number to be registered as PIN using the buttons numbered [1] - [4] of the PIN entry button (5).
5) Touch the "ENTER" button (3) for 1 second or longer.
• "COMPLETE" will be displayed, and the power will turns off after 3 seconds.

NOTE:
Take a note of the registered PIN and keep it for the future use.

Canceling the anti-theft feature

To cancel the anti-theft function, delete the registered PIN.

1) Touch the POWER button (1) for 1 second or longer to power off the audio system.
2) Hold down the buttons numbered [1] of the PIN entry button (5) and the "ENTER" button (3) and touch the POWER button (1).
• "PIN ENTRY" will be displayed.
3) Hold down the Up button of the List selection button (2) ^ and the button numbered [1] of the PIN entry button (5).
• "----" will be displayed.
4) Enter a 4-digit number to be registered as PIN using the buttons numbered [1] - [4] of the PIN entry button (5).
5) Touch the "ENTER" button (3) for 1 second or longer.
• If an incorrect PIN is entered, "ERROR* (ERR Number)" will be displayed for 3 seconds, then the audio system will go back to step 2.
• "----" is displayed on the screen, and the power will turns off after 3 seconds.

NOTE:
- *To change your PIN, first delete your current PIN, then set a new one.*
- *If an incorrect PIN is entered 10 times or more, "HELP" will be displayed and the audio system will become inoperable. In this case, contact a SUZUKI dealer.*

Confirming the Personal Identification Number (PIN)

When the main power source is disconnected such as when the battery is replaced, etc, it is required to enter the PIN to make the unit operable again.

1) Set the ignition switch to the ACC position.
• "SECURITY" will be displayed.
2) Hold down the Up button of the List selection button (2) ^ and the button numbered [1] of the PIN entry button (5).
• "----" will be displayed.
3) Enter the registered 4-digit PIN number using the buttons numbered [1] - [4] of the PIN entry button (5).
4) Touch the "ENTER" button (3) for 1 second or longer.
• If an incorrect PIN is entered, "ERROR* (ERR Number)" will be displayed for 3 seconds, then the audio system will go back to step 2.
• After 3 seconds, the power of the audio system will be turned off automatically and it will become operable again.

Steering Switch (if equipped)

Use the steering wheel button to operate the basic functions of the audio system.

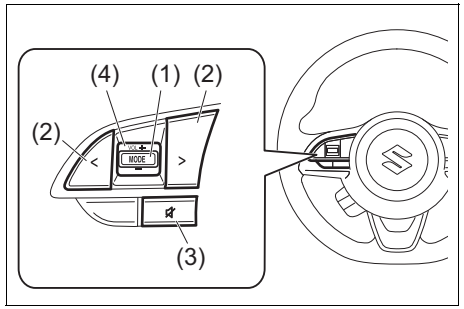

73R0157

(1) MODE button
(2) Selection button
  – Selecting the radio station
  – Selecting the track (USB (iPod), Bluetooth® audio mode)
(3) Mute button
(4) “VOL” (volume) button

MODE button (1)
• Each time the button is pressed, the mode will change as follows:
  AM → FM1 → FM2 → USB (iPod) (if equipped) → Bluetooth® audio (if equipped) → AUX (if equipped)

Selection button (2)
• FM1, FM2, AM mode:
  – Press > to transfer to the next preset channel.
  – Press < to transfer to the previous preset channel.
  – Press > for 1 second or longer, it will search for receivable stations at a high frequency.
  – Press < for 1 second or longer, it will search for receivable stations at a low frequency.
• USB (iPod), Bluetooth® audio mode:
  – Press > to transfer to the next song.
  With the folder operation mode, it will transfer to the next folder.
  – Press < to return to the beginning of the currently playing song. Pressing it twice consecutively will return to the previous song.
  With the folder operation mode, it will return to the previous folder.
  – Press > for 1 second or longer to fast-forward the song.
  When the button is released, it will stop fast-forwarding.
  – Press < for 1 second or longer to rewind the song.
  Releasing the button can stop rewinding.

Mute button (3)
• Hands-free mode
  Each time you press the button the mute will switch from ON/OFF.
• USB (iPod), Bluetooth® audio mode:
  Press the button during playback to temporarily stop the playback.

“VOL” button (4)
• Hands-free mode:
  – Press + during an outgoing or ingoing call, the reception/ringtone sound will increase.
  – Press − during an outgoing or ingoing call, the reception/ringtone sound will decrease.
  – Press + during an outgoing call, the ringtone sound will increase.
  – Press − during an outgoing call, the ringtone sound will decrease.
• Radio, USB (iPod), Bluetooth® audio, AUX mode:
  Press + , the volume will increase.
  Press − , the volume will decrease.

Troubleshooting

When encountered a problem, check and follow the instructions as described below.
If the described suggestions do not solve the problem, it is recommended to take the unit to a SUZUKI dealer or a qualified workshop.

Problem	Possible cause	Possible solution
Common		
Unable to operate	The security function is on.	When “SECURITY” is displayed, enter the ID. When “HELP” is displayed, contact a SUZUKI dealer or a qualified workshop.
Unable to turn on the power (no sound). (No sound is produced)	Fuse is blown.	Contact a SUZUKI dealer or a qualified workshop.
Radio		
Much noise	It may not be exactly tuned in to the station.	Tune it in exactly to the station.
Unable to receive by auto tuning	There may be no station emitting signals powerful enough.	Pick up a station by manual tuning.
USB		
Playback does not start when the USB device is connected.	There is no supported format file to play on this unit.	Check the file format.
	The current consumption of the USB device exceeds 1.0 A.	Use an USB device with a current consumption lower than 1.0 A.
Sound skips or noise produced	Sound skipping may occur when playing VBR (Variable Bit Rate) files.	It is not recommended to play VBR files.

Problem	Possible cause	Possible solution
Bluetooth®		
Pairing failed	The distance between this unit and the Bluetooth® ready device is too far, or a metallic object may be located between the Bluetooth® ready device and this unit.	Change the location of the Bluetooth® ready device.
	The Bluetooth® function of the Bluetooth® ready device is off.	Refer to the manual of the Bluetooth® ready device. (Some devices have the power saving function that automatically activates after a certain time.)
Unable to receive a call	Your current location may be out of service area.	Drive your vehicle to the service area of the phone.
The voice quality of hands-free is low (Distortion, noise etc.)	Another wireless device may be located near the unit.	Switch off the wireless device or keep it away from the unit.

Error Display Messages

The following messages (flashing) will be displayed onto the screen depending on the condition of the audio system.

Message	Description
Reading	When the USB device or iPod's file format is being read,, this message will be displayed.
ERROR 1	When the USB device or iPod's reading error occurs, this message will be displayed. Reconnect the USB device or iPod's connection cable. When the Bluetooth® audio playback malfunction occurs, this message will be displayed. Check the Bluetooth® audio body.

Message	Description
ERROR 2	When the USB device or iPod's communication error occurs, this message will be displayed. Reconnect the USB device or iPod's connection cable.
ERROR 3	When the USB device or iPod's issues are detected, this message will be displayed. Remove the USB device or iPod, and check the USB device or the iPod body.
ERROR 4	If the USB device or iPod does not operate due to an over current, this message will be displayed. Remove the USB device or iPod, and check the USB device or the iPod body.
ERROR 5	When the data playback fails with the USB device or iPod connected, or there are data unable to be transferred, this message will be displayed. Remove the USB device or iPod, and check the USB device or the iPod body.
ERROR 6	When the USB HUB is connected, this message will be displayed. Disconnect the USB HUB.
UNSUPPORTED	When an unsupported USB device or iPod is connected, this message will be displayed. Connect the supported USB device or iPod.
No Music	When an empty USB device or a USB device containing files with the extension unable to be played is connected, this message will be displayed. Connect the USB device containing files with the playable extension.
No Songs	When an iPod is connected, this message will be displayed.

Talk Button (if equipped)

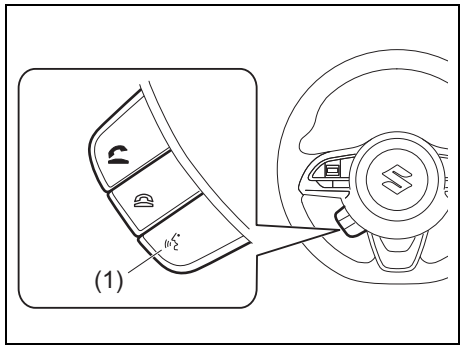

73R0327

(1) Talk button

It can be used with a device having a voice recognition function. To use the function, it is necessary to perform a corresponding setting on your device. For operation of the audio system or the navigation system, refer to the supplementary manual provided along with it.

Importer: CFAO MOTORS TANZANIA LIMITED
Address: Pugu/Nyerere Road PO Box 40798 Dar es Salaam Tanzania

Fuel Filler Cap

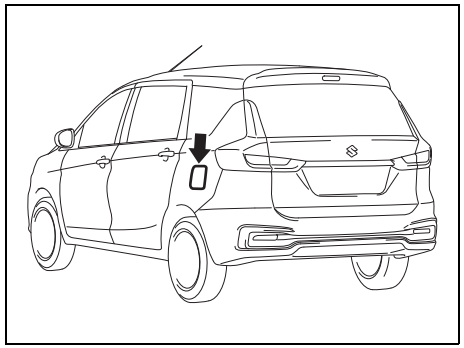

73R0083

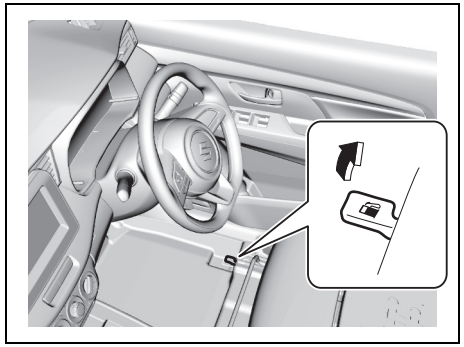

73R0084

The fuel filler cap is located on the left rear side of the vehicle. The fuel filler door can be unlocked by pulling up the opener lever located on the outboard lower side of the driver's seat and locked by simply closing the door.

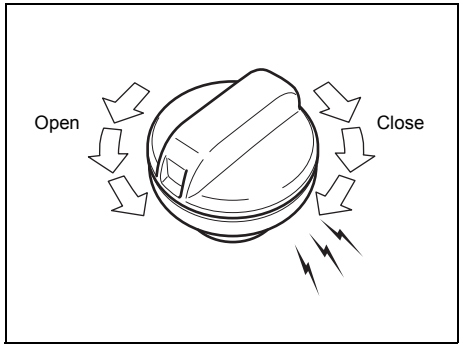

57L51093

To remove the fuel filler cap:
1) Stop the engine and close all the doors and windows while refueling.
2) Open the fuel filler door.
3) Remove the cap by turning it counterclockwise.

⚠ CAUTION

Remove the fuel filler cap slowly. The fuel may be under pressure and may spray out, causing injury.

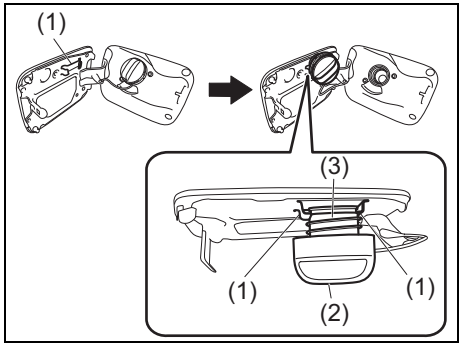

73R0085

NOTE:
The cap holder (1) holds the fuel filler cap (2) by hooking the groove (3) when refueling.

To reinstall the fuel filler cap:
1) Turn the cap clockwise until you hear several clicks.
2) Close the fuel filler door.

⚠ WARNING

Fuel is extremely flammable. Do not smoke when refueling, and make sure there are no open flames or sparks in the area.

⚠ WARNING

If you need to replace the fuel cap, use a genuine SUZUKI cap. Use of an improper cap can result in a malfunction of the fuel system or emission control system. It may also result in fuel leakage while driving and in the event of an accident.

Engine Hood

⚠ WARNING

- **Never allow children to open or close the hood. Children may injure themselves because the hood is heavy. Contact with the engine compartment and related parts may cause burns when this area/these parts are hot.**
- **Do not allow children to be near the vehicle when opening the hood.**
- **Do not leave tools, cloths, and other objects, which were used to clean or perform maintenance and inspections, in the engine compartment. Doing so may cause operational failures or even the vehicle to catch fire when the engine compartment becomes hot.**

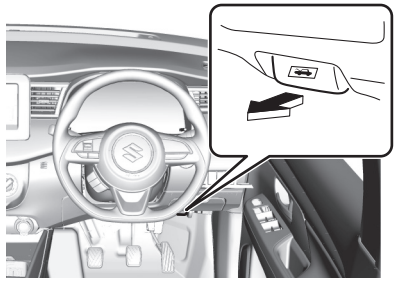

73R0086

To open the engine hood:

1) Pull the hood release handle located under the driver's side instrument panel in the outboard position. This will disengage the engine hood lock halfway.

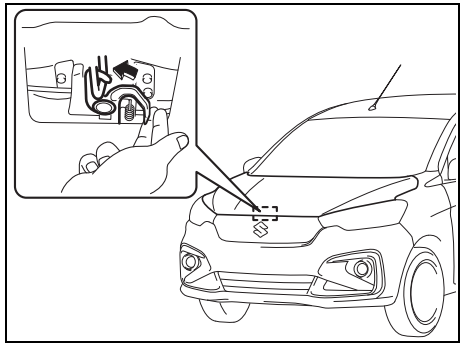

73R0087

2) Push the under-hood release lever upward with your finger, as shown in the illustration. While pushing the lever, lift up the engine hood.

⚠ CAUTION

The release lever and its peripheral, or engine hood can be hot enough to burn your finger right after driving. Touch after those becomes cool enough.

NOTICE

Check that the wiper arms are not raised before you lift up the engine hood to avoid damaging the wiper arms and the engine hood.

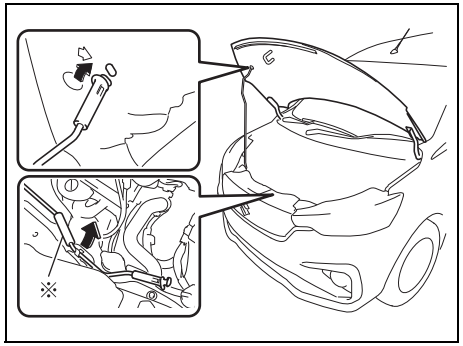

73R0088

3) While holding the hood, pull the prop rod out from the holding clip, and then insert the end of the rod into the designated hole.

⚠ CAUTION

- **The prop rod can be hot enough to burn your finger right after driving. Touch the rod after it becomes cool enough.**
- **Insert the end of the rod into the hole securely. If the rod slips out, you may get caught in the closing hood.**
- **The rod may slip out when the hood is blown by wind. Be careful on windy days.**

NOTICE

Hold the part maked in * when removing the bracket from the holder.

To close the engine hood:

1) Lift the hood up slightly and remove the prop rod from the hole. Put the prop rod back to the holding clip.

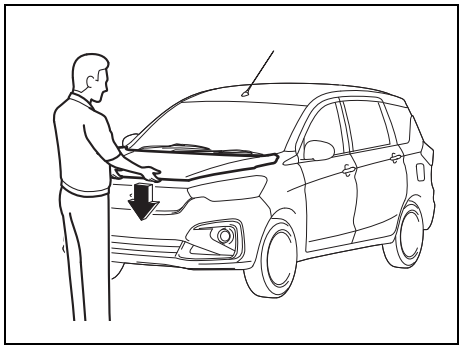

73R0158

2) Lower the hood to about 20 cm above the hood latch, and then let it drop down. Make sure the hood is securely latched after closing.

⚠ WARNING

Make sure the hood is fully closed and latched before driving. If it is not, it can fly up unexpectedly during driving, obstructing your view and resulting in an accident.

⚠ CAUTION

To avoid injury, check that no part of the occupant's body such as hands or head is in the path of the hood when closing it.

NOTICE

Pushing on the hood from the top may damage it.

Sun Visor

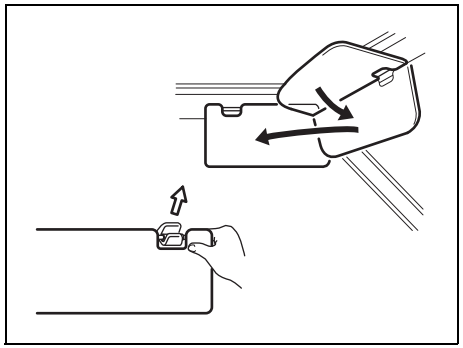

79J161

The sun visors can be pulled down to block glare coming through the windshield, or they can be unhooked and turned to the side to block glare coming through the side window.

NOTICE

When unhooking and hooking a sun visor, handle it by the hard plastic parts or the sun visor can be damaged.

Vanity mirror (if equipped)

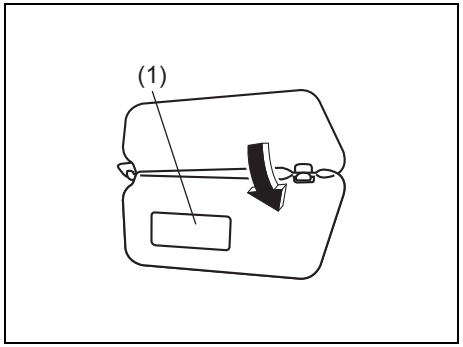

73R0167

(1) Vanity mirror

⚠ WARNING

- **Do not use the vanity mirror while driving. Doing so may result in an accident due to failure to pay attention to the road in front of you.**
- **Do not place any weight on or come to close to the locations where an airbag is stored when using a vanity mirror. Doing so may cause the airbag to deploy and cause serious injury due to the impact of the airbag.**

Interior Light

Front (Type A)

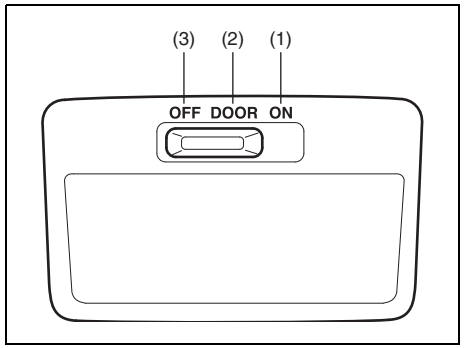

64J104

Front (Type B)

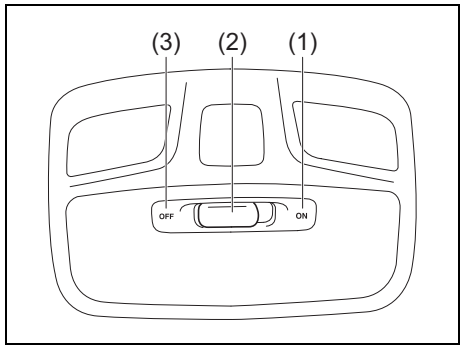

73R0090

Rear

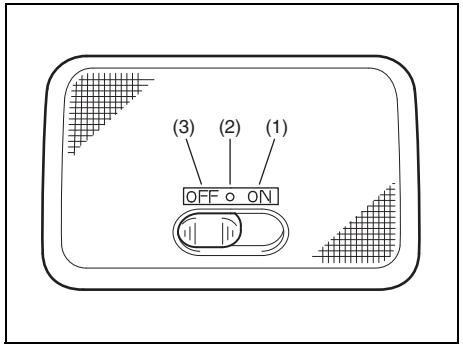

64J211

Interior light switch has three positions which function as described below:

ON (1)
The light comes on and stays on regardless of whether the door is open or closed.

NOTE:
The light will automatically be turned off to prevent the lead-acid battery from discharging when the following conditions are simultaneously met:
- *The ignition switch is in "LOCK" position, or the ignition mode is "LOCK" (OFF).*
- *The hazard warning lights, the position lights and the headlights are off.*
- *After 15 minutes from the light on.*

DOOR (2)
- The light comes on when the door is opened. After closing all doors, the light will remain on for about 15 seconds and then fade out. If you insert the key, or press the engine switch to change the ignition mode to "ACC" or "ON" during this time, the light will start to fade out immediately. After removing the key from the ignition switch or press the engine switch to change the ignition mode to "LOCK" (OFF), the light will turn on for about 15 seconds and then fade out.
- When the ignition switch is in LOCK position, or the ignition mode is "LOCK" (OFF), to prevent the battery from discharging, the light will automatically be turned off when a period of 15 minutes has elapsed after any of the doors (including the tailgate) is opened and other operations are not done.

OFF (3)
The light remains off even when the door is opened.

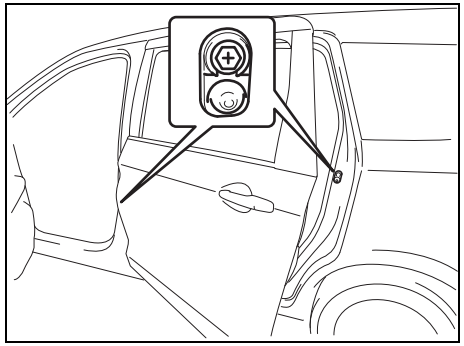

73R0091

NOTE:
The number of doors involved in the lighting operation of the interior light depends on the vehicle specification. If there is a switch (rubber projection) at the door opening as shown, the door is involved in the lighting operation. The tailgate is also involved in this operation even without the rubber projection depending on the vehicle specification.

Accessory Socket

Center Console

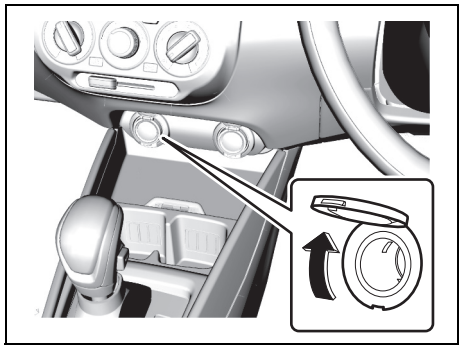

73R0092

Floor Console (if equipped)

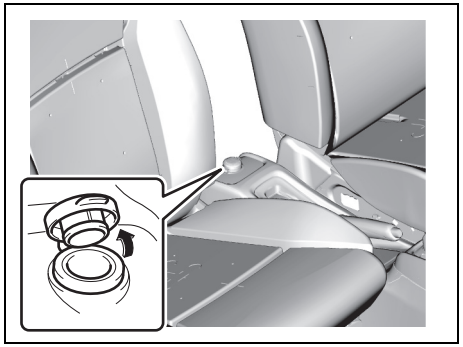

73R0093

The accessory socket will work when the ignition switch is in ACC or ON position, or the ignition mode is “ACC” or “ON”.
Each socket can be used to provide 12 volt/120 watt/10 ampere power for electrical accessories when used alone.

⚠ WARNING

When the accessory socket is not in use, closed the rubber cap. If any foreign material enters the accessory socket, it may cause a malfunction or short circuit.

NOTICE

- **Use of inappropriate electrical accessories can cause damage to your vehicle's electrical system. Check that any electrical accessories you use are designed to plug into this type of socket.**
- **When the ignition switch is in "LOCK" position or the ignition mode is LOCK (OFF) during using the accessory socket, the following accidents may occur;**
  - **– the audio or navigation system does not turn off.**
  - **– the keyless entry system does not work, etc.**

  If they occur, disconnect the item from the accessory socket and check whether the electrical equipments work properly.
  If the problem persists, ask a SUZUKI dealer or a qualified workshop to have the system inspected.

⚠ WARNING

If you pay too much attention to operating the Accessory socket while driving, an accident can occur.

Assist Grips

Front Passenger's Seat / 2rd Row Seat

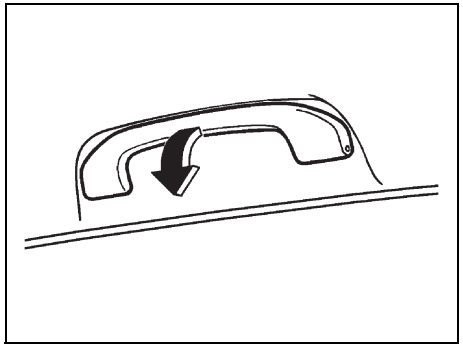

54G249

3rd Row Seat

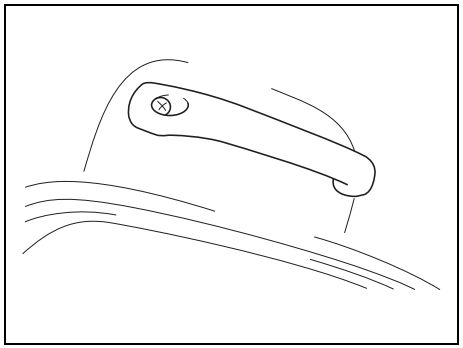

73R0094

Assist grips are provided for convenience.

NOTICE

To avoid damaging the assist grip and the molded headlining, do not hang down the assist grip.

Glove Box



73R0095

To open the glove box, pull the latch lever. To close it, push the lid until it latches securely.

⚠ WARNING

Never drive with the glove box lid open. It could cause injury if an accident occurs.

⚠ WARNING

When items get pushed around or when the seats are moved, it ispossible that gas could escape and lead to a fire. Do not place accessories such lighters or spray canswith exposed operating parts in the glove box, in storage compartments, between the seats, on the floor, etc.

⚠ WARNING

Do not drive the vehicle with the lid of glove box open.

USB Socket (if equipped)

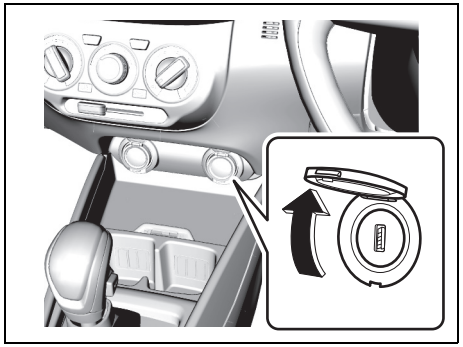

86T0110

Connect your portable digital music player, etc. to this socket to enjoy music through the vehicle's audio system. Refer to "Audio system (if equipped)" in this section.

⚠ WARNING

If foreign material enters the AUX/USB socket, a malfunction or a short circuit may occur. Always close the cover when the AUX/USB socket is not in use.

⚠ WARNING

If you pay too much attention to operating the AUX/USB socket while driving, an accident may occur.

⚠ WARNING

Do not put items in the vehicle that may fall or roll around in the vehicle while driving. Objects getting caught in the brake pedal or accelerator pedal may prevent proper operation of the pedals, which may result in an accident.

Cup Holder and Storage Area

⚠ WARNING

When items get pushed around or when the seats are moved, it ispossible that gas could escape and lead to a fire. Do not place accessories such lighters or spray canswith exposed operating parts in the glove box, in storage compartments, between the seats, on the floor, etc.

Front

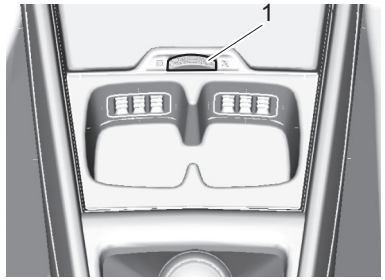

73R0097

Ventilated cup holder (if equipped)
If you turn on the air conditioning system, air flow comes out of the cup holder outlet. Air flow prevent the temperature of the drink from increasing.
Turn the dial wheel (1) clockwise, the cup holder outlet will open.
Turn the dial wheel (1) counterclockwise, the cup holder outlet will close.

NOTE:
- *The temperature of air flow in cup holder is about the same with the center outlet.*
- *There is no effect to cool the drink in the cup holder.*

3rd Row Seats

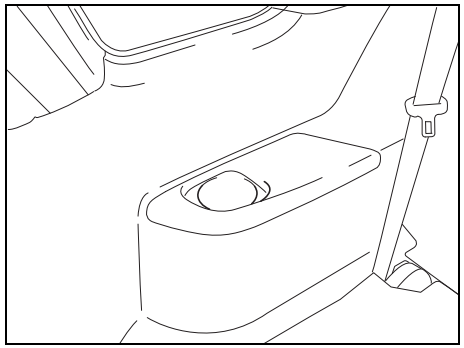

73R0098

⚠ WARNING

Failure to take the precautions listed below could cause personal injury or vehicle damage.

- **Be careful when you are using the cup holders to hold a cup containing liquid. Spilling out hot liquid can cause burn injury.**
- **Do not use the cup holders to hold sharp-edged, hard, or breakable objects. Objects in the cup holders may be thrown about during a sudden stop or impact, and could cause personal injury.**
- **Be careful not to spill liquid or insert any foreign materials into the moving part of the gearshift lever, or any electrical components. Liquid or foreign materials may damage these parts.**
- **If you spill, or drop liquid accidentally, have your vehicle inspected by a SUZUKI dealer or a qualified workshop.**

Bottle Holder

Front seats

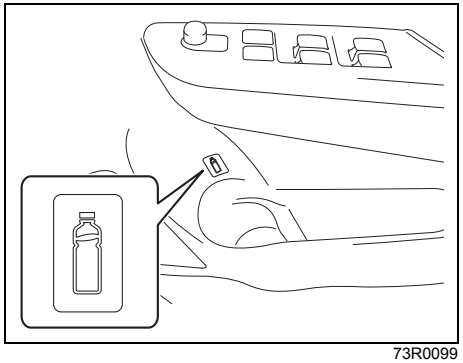

73R0099

2nd row seats

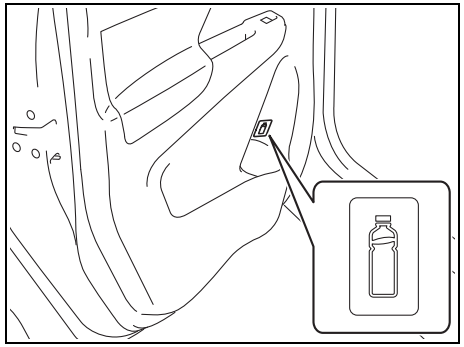

73R0100

You should hold a bottle with a cap in the holder.

Rear Armrest (if equipped)

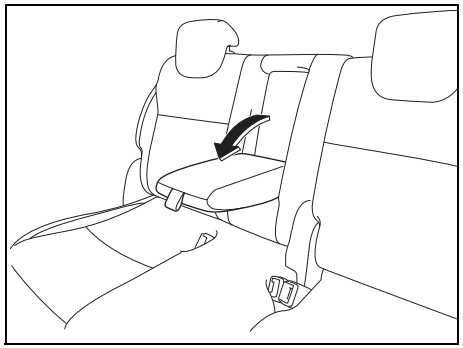

72R0046

The rear armrest is stowed in the center of the seatback. Tilt it down forward to use.

⚠ WARNING

If the seat belt is obstructed by any part of the armrest when fastened, it cannot provide the intended protection. After fastening the seat belt, always check that the armrest is not interfering with the belt.

Bill/Coin Holder

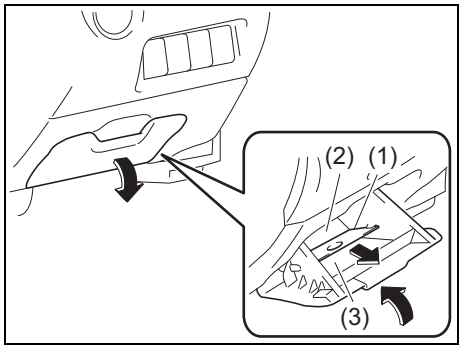

73R0216

Pull the upper of the holder downward to open the cover.
It is recommended to separate coins (2) and bills (3) with partition.
The holder can also be used after sliding out and removing the partition plate (1).
Push the upper of the holder to close the cover.

⚠ WARNING

Never drive with the bill/coin holder lid open. It could cause injury if an accident occurs.

Footrest (if equipped)

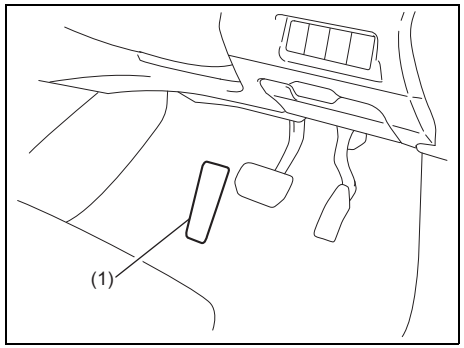

73R0173

Use the footrest (1) as a support for your left foot and body.

Front Seat Back Pocket (if equipped)

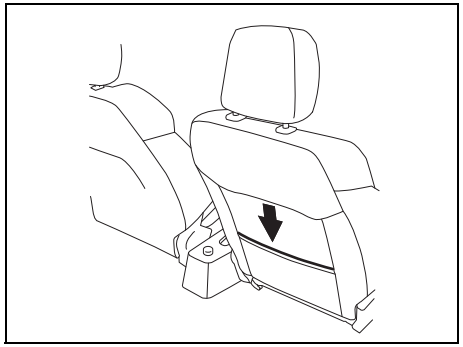

73R0101

This pocket is provided for holding light and soft things such as gloves, newspapers or magazines.

⚠ CAUTION

Do not put hard or breakable objects in the pocket. If an accident occurs, objects such as bottles, cans, etc. can injure the occupants in the rear seat.

Luggage Box (if equipped)

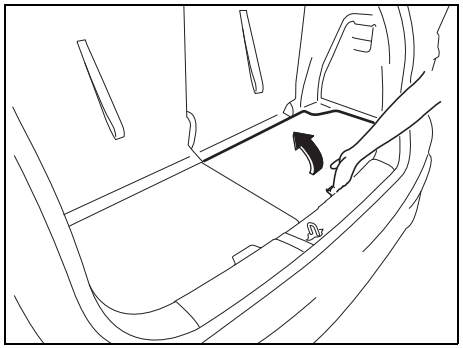

73R0102

Insert your hands into the notches and lift up the luggage box cover to use the box.

NOTICE

Do not allow items in the box to extend above the top of the box. Otherwise, the box or cover may be damaged.

NOTICE

Observe the following instructions, not to break the luggage box cover.
- **Do not hold open the cover while driving.**
- **Do not apply any load to the cover while holding it open.**

Roof Rails (if equipped)

Roof Rails

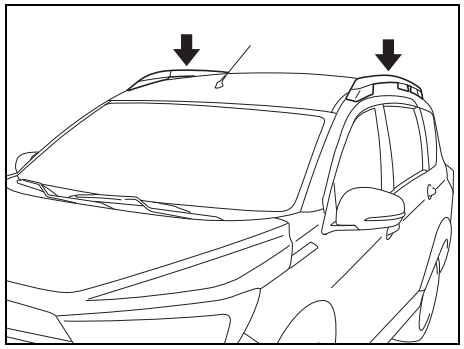

73R0302

You can use the roof rails to attach the optional roof rack which is available at your SUZUKI dealer. If you use a roof rack, observe the instructions and precautions in this section and provided with the roof rack.

- Check that the roof rack is securely installed.
- To mount various types of cargo (such as skis, bicycles, etc.) properly, use suitable attachments which are available at your SUZUKI dealer. Install the attachments properly and securely according to the instructions provided. Do not mount cargo directly on the roof panel. The cargo can damage the roof panel.
- The gross weight of the roof rack plus cargo must not exceed the loading capacity.
  – Roof Rails: 50 kg (110 lbs)
  Also, do not let the gross vehicle weight (fully loaded vehicle including driver, passengers, cargo, roof load and trailer tongue weight) exceed the Gross Vehicle Weight Rating (GVWR) listed in “SPECIFICATIONS” section.
- Mount and secure the cargo onto the roof rack properly according to the instructions provided. Stow the heaviest items at the bottom and distribute the cargo as evenly as possible.
- Do not carry large items that hang over the bumpers or the sides of the vehicle. Otherwise, these items could block your view.
- Secure the front and rear ends of long items such as wood panels and surfboards, to both the front and rear of the vehicle. You should protect the painted surfaces of the vehicle from scuffing caused by tie-down ropes.
- Check periodically that the roof rack is securely installed and free from damage.

⚠ WARNING

- **Abrupt maneuvers or failure to properly secure cargo can allow the cargo to fly off the vehicle and hit others, causing personal injury or property damage.**
- **Mount cargo securely and avoid abrupt maneuvers such as jackrabbit starts, sharp turns, fast cornering and sudden braking. Check periodically that cargo is securely fastened.**
- **Large, bulky, long or flat items can affect vehicle aerodynamics or be caught by the wind, and can reduce vehicle control resulting in an accident and personal injury. Drive cautiously at a safely reduced speed when carrying this type of cargo.**

Frame Hooks

It is not recommended that you use the frame hooks for towing another vehicle. They were originally designed to tow your vehicle in emergency situation.
If your vehicle needs to be towed in an emergency, refer to “Towing your vehicle” in “EMERGENCY SERVICE” section.

⚠ WARNING

Observe the following instructions when using frame hooks. The towing eye or vehicle body may break and cause serious injury or damage:
- **Do not use the frame hooks for towing another vehicle.**
- **Avoid pulling the vehicle to get out of severe snowy, muddy or sandy conditions, sudden starts or erratic driving maneuvers which could cause excessive stress on the towing eye.**

In such case, we recommend that you contact a professional service.

Front

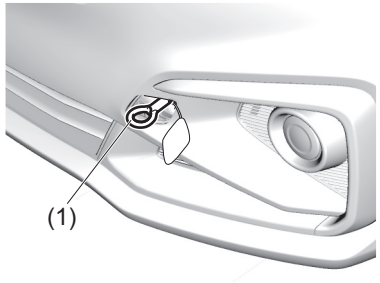

73R0183

The towing eye (1) is provided on the front of the vehicle for use in emergency situations and sea shipping purpose only.

NOTICE

To prevent damage to the vehicle, never use the towing eye (1) for trailer / train shipping.

To install the hook (1), follow the procedure below.

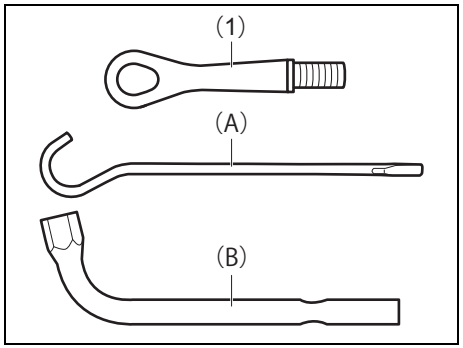

52RM50170

Tools are stowed in the side of the luggage compartment. Remove the cover to access the tools.

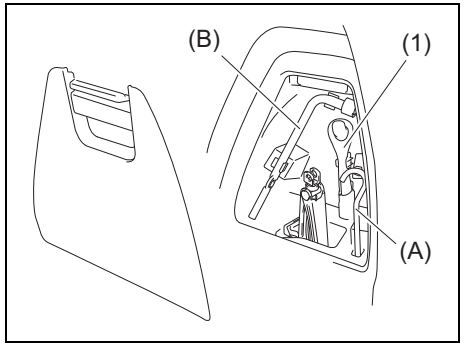

73RS015

1) Pick up the towing eye (1), jack handle (A) and wheel wrench (B) in the luggage compartment.

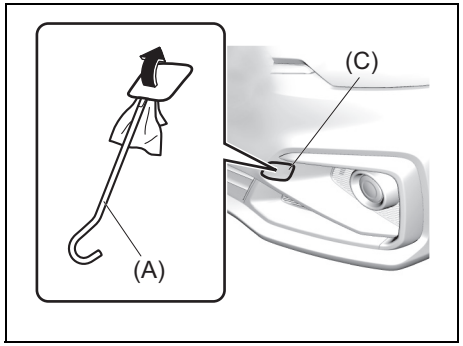

86T0018

2) Remove the cover (C) by using a jack handle (A) covered with a soft cloth as shown in the illustration.

NOTE:
Do not use excessive force as it may damage the cover strap.

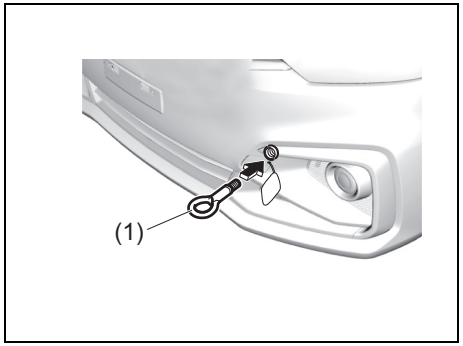

86T0019

3) Install the towing eye (1) by hand.

NOTE:
It is recommended to secure the cover with tape to prevent damage during towing.

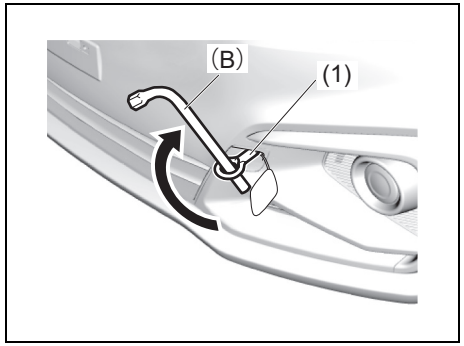

86T0020

4) To tighten the towing eye (1), turn it clockwise by using a wheel wrench (B) until the towing eye (1) is securely installed.

To remove the towing eye (1), reverse the installation procedure.

Rear

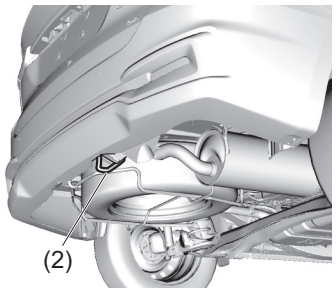

73R0104

The frame hook (2) is provided on the rear of the vehicle for use in emergency situations and sea shipping purposes only.

NOTICE

To prevent damage to the vehicle, never use the frame hook (2) for trailer / train shipping.

Other Holes

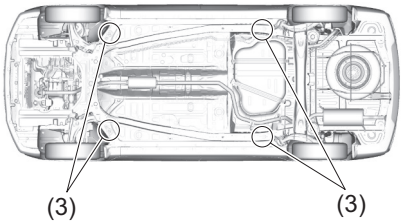

73R0105

The frame holes (3) are provided only for transporting by a car carrier trailer.

NOTICE

Do not use the frame holes (3) for towing purpose. These holes may break and cause serious injury or damage.

MEMO

INSPECTION AND MAINTENANCE

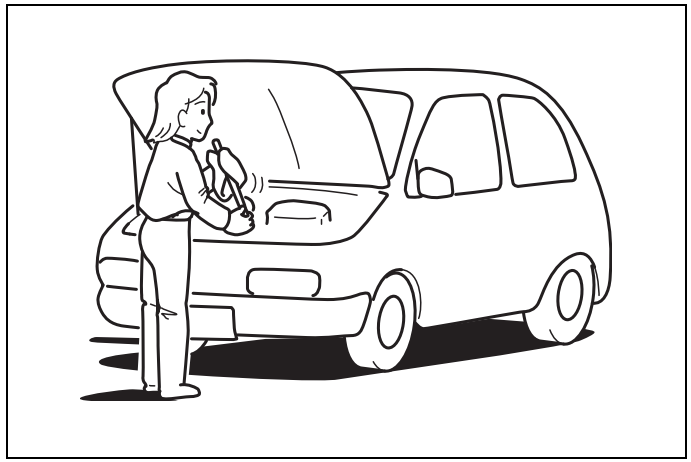

60G410

Maintenance Schedule 6-2
Periodic Maintenance Schedule 6-2
Maintenance Recommended under
Severe Driving Conditions 6-8
Drive Belt 6-13
Engine Oil and Filter 6-13
Engine Coolant 6-17
Air Cleaner 6-19
Spark Plugs 6-19
Gear Oil 6-21
Clutch 6-22
Automatic Transmission (AT) Fluid 6-23
Brakes 6-24
Steering Wheel 6-28
Tyres 6-28
Lead-acid Battery 6-30
Fuses 6-32
Headlight Aiming 6-36
Bulb Replacement 6-37
Wiper Blades 6-43
Windshield Washer Fluid 6-47
Air Conditioning System 6-47

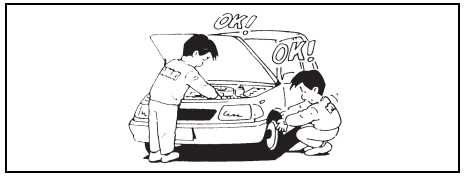

60B128S

⚠ WARNING

Take extreme care when working on your vehicle to prevent accidental injury. Carefully observe the following precautions:

- **To prevent damage or unintended activation of the airbag system or seat belt pretensioner system, be sure that the battery is disconnected and the ignition switch has been in LOCK position or the ignition mode has been "LOCK" (OFF) for at least 90 seconds before performing any electrical service work on your SUZUKI vehicle. Do not touch airbag system components, seat belt pretensioner system components or wires.**
  The wires are wrapped with yellow tape or yellow tubing, and the couplers are yellow for easy identification.
- **Do not leave the engine running in garages or other confined areas.**

(Continued)

⚠ WARNING

(Continued)

- **When the engine is running, keep hands, clothing, tools, and other objects away from the fan and drive belt. Even though the fan may not be moving, it can automatically turn on without warning.**
- **When it is necessary to perform service work with the engine running, make sure that the parking brake is set fully and the transmission is in Neutral (for manual transmission vehicles) or Park (for automatic transmission vehicles).**
- **Do not touch ignition wires or other ignition system parts when starting the engine or when the engine is running, or you could receive an electric shock.**
- **Be careful not to touch a hot engine, exhaust manifold and pipes, muffler, radiator and water hoses.**
- **Do not allow smoking, sparks, or flames around fuel or the battery. Flammable fumes are present.**
- **Do not get under your vehicle if it is supported only with the portable jack provided in your vehicle.**
- **Be careful not to cause accidental short circuits between the positive and negative battery terminals.**

(Continued)

⚠ WARNING

(Continued)

- **Keep used oil, coolant, and other fluids away from children and pets. Dispose of used fluids properly; never pour them on the ground, into sewers, etc.**

Maintenance Schedule

The following table shows the times when you should perform regular maintenance on your vehicle. This table shows in miles, kilometers and months when you should perform inspections, adjustments, lubrication and other services. These intervals should be shortened if driving is usually done under severe conditions (refer to "Maintenance Recommended under Severe Driving Conditions").

⚠ WARNING

SUZUKI recommends that maintenance on items marked with an asterisk (*) be performed by a SUZUKI dealer or a qualified workshop. If you are qualified, you may perform maintenance on the unmarked items by referring to the instructions in this section. If you are not sure whether you can successfully complete any of the unmarked maintenance jobs, ask a SUZUKI dealer or a qualified workshop to do the maintenance for you.

NOTICE

Whenever it becomes necessary to replace parts on your vehicle, it is recommended that you use genuine SUZUKI replacement parts or their equivalent.

Periodic Maintenance Schedule

"R" : Replace or Change
"I" : Inspect, clean, adjust, lubricate or replace as necessary

NOTE:
This table shows the service schedule up to 180000 km (108000 miles). Beyond 180000 km (108000 miles), perform the same services at the same intervals shown in the chart.

Interval: This interval should be judged by odometer reading or months, whichever comes first.								
		km (x1000)	15	30	45	60	75	90
		miles (x1000)	9	18	27	36	45	54
		months	12	24	36	48	60	72
ENGINE								
*1-1. Engine accessory drive belt	Tension check, *Replacement		I	I	R	I	I	R
*1-2. Valve clearance			–	I	–	I	–	I
1-3. Engine oil and engine oil filter			R	R	R	R	R	R
1-4. Engine coolant			–	–	R	–	–	R
*1-5. Exhaust system (except catalyst)			–	I	–	I	–	I
IGNITION								
2-1. Spark plugs								
When **unleaded** fuel is used	Nickel plug		–	–	R	–	–	R
When **leaded** fuel is used, refer to “Severe Driving Condition” schedule.								
FUEL								
3-1. Air cleaner filter element	Paved-road		I	I	R	I	I	R
	Dusty condition		Refer to “Severe Driving condition” schedule.					
*3-2. Fuel lines			–	I	–	I	–	I
*3-3. Fuel filter			Replace every 105000 km (63000 miles).					
*3-4. Fuel tank			–	–	I	–	–	I
EMISSION CONTROL SYSTEM								
*4-1. PCV valve			–	–	–	–	–	I
*4-2. Fuel evaporative emission control system			–	–	–	–	–	I

Interval: This interval should be judged by odometer reading or months, whichever comes first.		km (x1000)	105	120	135	150	165	180
		miles (x1000)	63	72	81	90	99	108
		months	84	96	108	120	132	144
ENGINE								
*1-1. Engine accessory drive belt	Tension check, *Replacement		I	I	R	I	I	R
*1-2. Valve clearance			–	I	–	I	–	I
1-3. Engine oil and engine oil filter			R	R	R	R	R	R
1-4. Engine coolant			–	–	R	–	–	R
*1-5. Exhaust system (except catalyst)			–	I	–	I	–	I
IGNITION								
2-1. Spark plugs								
When **unleaded** fuel is used	Nickel plug		–	–	R	–	–	R
When **leaded** fuel is used, refer to “Severe Driving Condition” schedule.								
FUEL								
3-1. Air cleaner filter element	Paved-road		I	I	R	I	I	R
	Dusty condition		Refer to “Severe Driving condition” schedule.					
*3-2. Fuel lines			–	I	–	I	–	I
*3-3. Fuel filter			Replace every 105000 km (63000 miles).					
*3-4. Fuel tank			–	–	I	–	–	I
EMISSION CONTROL SYSTEM								
*4-1. PCV valve			–	–	–	–	–	I
*4-2. Fuel evaporative emission control system			–	–	–	–	–	I

Interval: This interval should be judged by odometer reading or months, whichever comes first.		km (x1000)	15	30	45	60	75	90
		miles (x1000)	9	18	27	36	45	54
		months	12	24	36	48	60	72
BRAKE								
*5-1. Brake discs and pads (front)			I	I	I	I	I	I
Brake drums and shoes (rear)			–	I	–	I	–	I
*5-2. Brake hoses and pipes			–	I	–	I	–	I
5-3. Brake pedal			I	I	I	I	I	I
*5-4. Brake fluid (#1)			I	R	I	R	I	R
5-5. Parking brake lever and cable	Check, *Adjustment (1st 15000 km only)		I	–	–	–	–	–
CHASSIS AND BODY								
*6-1. Clutch pedal			I	I	I	I	I	I
*6-2. Clutch fluid (#1)			I	R	I	R	I	R
6-3. Tyres/Wheels (#2)			I	I	I	I	I	I
*6-4. Wheel bearings (#3)			–	I	–	I	–	I
*6-5. Drive axle boots (#4)			–	–	I	–	–	I
*6-6. Suspension system (#5)			–	I	–	I	–	I
*6-7. Steering system (#6)			–	I	–	I	–	I
*6-8. Manual transmission oil	Genuine “SUZUKI GEAR OIL 75W-80”		–	I	–	I	–	I
	Other than “SUZUKI GEAR OIL 75W-80”		I	–	R	–	–	R
	(I: 1st 15000 km only)							
6-9. Automatic transmission	Fluid level		–	I	–	I	–	I
	* Fluid change		Replace every 165000 km (99000 miles)					
	* Fluid hose		–	–	–	I	–	–
6-10. All latches, hinges and locks			–	I	–	I	–	I
*6-11. Air conditioner filter element (if equipped)			–	I	R	–	I	R

#1: Clutch fluid is supplied from brake fluid reservoir.
#2: Tyres/Wheels (including tyre rotation) for Mexico models : Inspect every 15000 km (9000 miles) or 12 months.
#3: Wheel bearings for Mexico models : Inspect every 15000 km (9000 miles) or 12 months.
#4: Drive axle boots for Mexico models : Inspect every 15000 km (9000 miles) or 12 months.
#5: Suspension system for Mexico models : Inspect every 15000 km (9000 miles) or 12 months.
#6: Steering system for Mexico models : Inspect every 15000 km (9000 miles) or 12 months.

⚠ WARNING

The shock absorbers are filled with high pressure gas. Never attempt to disassemble them or throw them into a fire. Avoid storing them near a heater or heating device. When scrapping the absorber, the gas must be released from the absorber safely. Ask a SUZUKI dealer or a qualified workshop for assistance.

Interval: This interval should be judged by odometer reading or months, whichever comes first.		km (x1000)	105	120	135	150	165	180
		miles (x1000)	63	72	81	90	99	108
		months	84	96	108	120	132	144
BRAKE								
*5-1. Brake discs and pads (front)			I	I	I	I	I	I
Brake drums and shoes (rear)			–	I	–	I	–	I
*5-2. Brake hoses and pipes			–	I	–	I	–	I
5-3. Brake pedal			I	I	I	I	I	I
*5-4. Brake fluid (#1)			I	R	I	R	I	R
5-5. Parking brake lever and cable	Check, *Adjustment (1st 15000 km only)		–	–	–	–	–	–
CHASSIS AND BODY								
*6-1. Clutch pedal			I	I	I	I	I	I
*6-2. Clutch fluid (#1)			I	R	I	R	I	R
6-3. Tyres/Wheels (#2)			I	I	I	I	I	I
*6-4. Wheel bearings (#3)			–	I	–	I	–	I
*6-5. Drive axle boots (#4)			–	–	I	–	–	I
*6-6. Suspension system (#5)			–	I	–	I	–	I
*6-7. Steering system (#6)			–	I	–	I	–	I
*6-8. Manual transmission oil	Genuine “SUZUKI GEAR OIL 75W-80”		–	I	–	R	–	I
	Other than “SUZUKI GEAR OIL 75W-80”		–	–	R	–	–	R
	(I: 1st 15000 km only)							
6-9. Automatic transmission	Fluid level		–	I	–	I	–	I
	* Fluid change		Replace every 165000 km (99000 miles)					
	* Fluid hose		–	I	–	–	–	I
6-10. All latches, hinges and locks			–	I	–	I	–	I
*6-11. Air conditioner filter element (if equipped)			–	I	R	–	I	R

#1: Clutch fluid is supplied from brake fluid reservoir.
#2: Tyres/Wheels (including tyre rotation) for Mexico models : Inspect every 15000 km (9000 miles) or 12 months.
#3: Wheel bearings for Mexico models : Inspect every 15000 km (9000 miles) or 12 months.
#4: Drive axle boots for Mexico models : Inspect every 15000 km (9000 miles) or 12 months.
#5: Suspension system for Mexico models : Inspect every 15000 km (9000 miles) or 12 months.
#6: Steering system for Mexico models : Inspect every 15000 km (9000 miles) or 12 months.

MEMO

Maintenance Recommended under Severe Driving Conditions

Follow this schedule if your vehicle is mainly operated under one or more of the following conditions:
- When most trips are less than 6 km (4 miles).
- When most trips are less than 16 km (10 miles) and outside temperature remains below freezing.
- Idling and/or low-speed operation in stop-and-go traffic.
- Operating in extremely cold weather and/or on salted roads.
- Operating in rough and/or muddy areas.
- Operating in dusty areas.
- Repeated high speed drive or high engine revolutions.
- Towing a trailer, if admitted.

Schedule should also be followed if the vehicle is used for delivery service, police, taxi or other commercial applications.

Interval: This interval should be judged by odometer reading or months, whichever comes first.								
		km (x1000)	7.5	15	22.5	30	37.5	45
		miles (x1000)	4.5	9	13.5	18	22.5	27
		months	6	12	18	24	30	36
ENGINE								
*1-1. Engine accessory drive belt	Tension check, *Replacement		I	I	R	I	I	R
*1-2. Valve Clearance			–	–	–	I	–	–
1-3. Engine oil and engine oil filter			R	R	R	R	R	R
1-4. Engine coolant			–	–	–	–	–	R
*1-5. Exhaust system (except catalyst)			–	–	–	I	–	–
IGNITION								
2-1. Spark plugs	Nickel plug		Replace every 10000 km (6000 miles) or 8 months.					
FUEL								
3-1. Air cleaner filter element*[1]			Inspect every 2500 km (1500 miles).					
			Replace every 30000 km (18000 miles) or 24 months.					
*3-2. Fuel lines			–	–	–	I	–	–
*3-3. Fuel filter			Replace every 105000 km (63000 miles).					
*3-4. Fuel tank			–	–	–	–	–	I
EMISSION CONTROL SYSTEM								
*4-1. PCV valve			–	–	–	–	–	–
*4-2. Fuel evaporative emission control system			–	–	–	–	–	–

Interval: This interval should be judged by odometer reading or months, whichever comes first.								
		km (x1000)	52.5	60	67.5	75	82.5	90
		miles (x1000)	31.5	36	40.5	45	49.5	54
		months	42	48	54	60	66	72
ENGINE								
*1-1. Engine accessory drive belt	Tension check, *Replacement		I	I	R	I	I	R
*1-2. Valve Clearance			–	I	–	–	–	I
1-3. Engine oil and engine oil filter			R	R	R	R	R	R
1-4. Engine coolant			–	–	–	–	–	R
*1-5. Exhaust system (except catalyst)			–	I	–	–	–	I
IGNITION								
2-1. Spark plugs	Nickel plug		Replace every 10000 km (6000 miles) or 8 months.					
FUEL								
3-1. Air cleaner filter element*[1]			Inspect every 2500 km (1500 miles).					
			Replace every 30000 km (18000 miles) or 24 months.					
*3-2. Fuel lines			–	I	–	–	–	I
*3-3. Fuel filter			Replace every 105000 km (63000 miles).					
*3-4. Fuel tank			–	–	–	–	–	I
EMISSION CONTROL SYSTEM								
*4-1. PCV valve			–	–	–	–	–	I
*4-2. Fuel evaporative emission control system			–	–	–	–	–	I

Interval: This interval should be judged by odometer reading or months, whichever comes first.		km (x1000)	7.5	15	22.5	30	37.5	45
		miles (x1000)	4.5	9	13.5	18	22.5	27
		months	6	12	18	24	30	36
BRAKE								
*5-1. Brake discs and pads (front)			–	I	–	I	–	I
Brake drums and shoes (rear)			–	–	–	I	–	–
*5-2. Brake hoses and pipes			–	–	–	I	–	–
5-3. Brake pedal			–	I	–	I	–	I
*5-4. Brake fluid (#1)			–	I	–	R	–	I
5-5. Parking brake lever and cable	Check, *Adjustment (1st 15000 km only)		–	I	–	–	–	–
CHASSIS AND BODY								
*6-1. Clutch pedal			–	I	–	I	–	I
*6-2. Clutch fluid (#1)			–	I	–	R	–	I
6-3. Tyres/Wheels (#2)			–	I	–	I	–	I
*6-4. Wheel bearings (#3)			–	I	–	I	–	I
*6-5. Drive axle boots (#4)			–	I	–	I	–	I
*6-6. Suspension system (#5)			–	–	–	I	–	–
*6-7. Steering system (#6)			–	–	–	I	–	–
*6-8. Manual transmission oil	Genuine “SUZUKI GEAR OIL 75W-80”		–	–	–	I	–	–
	Other than “SUZUKI GEAR OIL 75W-80”		–	–	–	R	–	–
6-9. Automatic transmission	Fluid level		–	–	–	I	–	–
	*Fluid change		–	–	–	R	–	–
	*Fluid hose		Inspect every 60000 km (36000miles) or 48 months.					
6-10. All latches, hinges and locks			–	–	–	I	–	–
*6-11. Air conditioner filter element (if equipped)*2			–	I	–	I	–	R

#1: Clutch fluid is supplied from brake fluid reservoir.
#2: Tyres/Wheels (including tyre rotation) for Mexico models : Inspect every 7500 km (4500 miles) or 6 months.
#3: Wheel bearings for Mexico models : Inspect every 7500 km (4500 miles) or 6 months.
#4: Drive axle boots for Mexico models : Inspect every 7500 km (4500 miles) or 6 months.
#5: Suspension system for Mexico models : Inspect every 7500 km (4500 miles) or 6 months.
#6: Steering system for Mexico models : Inspect every 7500 km (4500 miles) or 6 months.

⚠ WARNING

The shock absorbers are filled with high pressure gas. Never attempt to disassemble them or throw them into a fire. Avoid storing them near a heater or heating device. When scrapping the absorber, the gas must be released from the absorber safely. Ask a SUZUKI dealer or a qualified workshop for assistance.

Interval: This interval should be judged by odometer reading or months, whichever comes first.		km (x1000)	52.5	60	67.5	75	82.5	90
		miles (x1000)	31.5	36	40.5	45	49.5	54
		months	42	48	54	60	66	72
BRAKE								
*5-1. Brake discs and pads (front)			–	I	–	I	–	I
Brake drums and shoes (rear)			–	I	–	–	–	I
*5-2. Brake hoses and pipes			–	I	–	–	–	I
5-3. Brake pedal			–	I	–	I	–	I
*5-4. Brake fluid (#1)			–	R	–	I	–	R
5-5. Parking brake lever and cable	Check, *Adjustment (1st 15000 km only)		–	–	–	–	–	–
CHASSIS AND BODY								
*6-1. Clutch pedal			–	I	–	I	–	I
*6-2. Clutch fluid (#1)			–	R	–	I	–	R
6-3. Tyres/Wheels (#2)			–	I	–	I	–	I
*6-4. Wheel bearings (#3)			–	I	–	I	–	I
*6-5. Drive axle boots (#4)			–	I	–	I	–	I
*6-6. Suspension system (#5)			–	I	–	–	–	I
*6-7. Steering system (#6)			–	I	–	–	–	I
*6-8. Manual transmission oil	Genuine “SUZUKI GEAR OIL 75W-80”		–	R	–	–	–	I
	Other than “SUZUKI GEAR OIL 75W-80”		–	R	–	–	–	R
6-9. Automatic transmission	Fluid level		–	I	–	–	–	I
	*Fluid change		–	R	–	–	–	R
	*Fluid hose		Inspect every 60000 km (36000miles) or 48 months.					
6-10. All latches, hinges and locks			–	I	–	–	–	I
*6-11. Air conditioner filter element (if equipped)*2			–	I	–	I	–	R

#1: Clutch fluid is supplied from brake fluid reservoir.
#2: Tyres/Wheels (including tyre rotation) for Mexico models : Inspect every 7500 km (4500 miles) or 6 months.
#3: Wheel bearings for Mexico models : Inspect every 7500 km (4500 miles) or 6 months.
#4: Drive axle boots for Mexico models : Inspect every 7500 km (4500 miles) or 6 months.
#5: Suspension system for Mexico models : Inspect every 7500 km (4500 miles) or 6 months.
#6: Steering system for Mexico models : Inspect every 7500 km (4500 miles) or 6 months.

NOTE:
This table shows the service schedule up to 90000 km (54000 miles).
Beyond 90000 km (54000 miles), perform the same services at the same intervals shown in the chart.
**1 Inspect more frequently if the vehicle is used under dusty conditions.*
**2 Clean more frequently if the air flow from the air conditioner decreases.*

Drive Belt

⚠ WARNING

When the engine is running, keep hands, hair, clothing, tools, etc. away from the moving fan and drive belts.

Check that the drive belt tension is correct while the engine is stopped. If the belt is too loose, insufficient battery charging, engine overheating, poor air conditioning, or excessive belt wear can result. When you push the belt with your thumb midpoint between the pulleys, there should be a deflection according to the following chart.

The belts should also be examined to ensure that they are not damaged.

If you need to replace or adjust the belt have it done by a SUZUKI dealer or a qualified workshop.

The drive belt tension is adjusted automatically. To increase the engine life, check the drive belt condition. Since special procedures, materials and tools are required, it is recommended that you trust this job to a SUZUKI dealer or a qualified workshop.

Engine Oil and Filter

Specified Oil

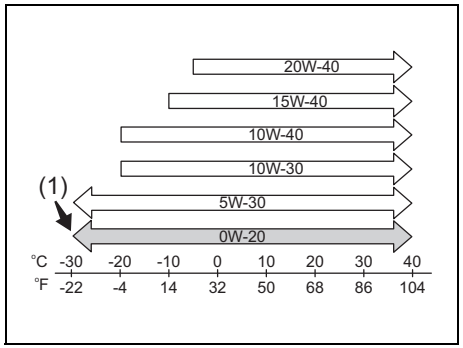

73R0107

(1) Preferred

Be sure that the engine oil you use comes under the quality classification as listed below.

- API SJ, SL, SM, SN or SP
- ILSAC GF-6

Select the appropriate oil viscosity according to the above chart.

SAE 0W-20 (1) is the best choice for good fuel economy and good startability in cold weather.

NOTE:
We recommend that you use SUZUKI genuine oil. To purchase it, visit a SUZUKI dealer or a qualified workshop.

Oil Level Check

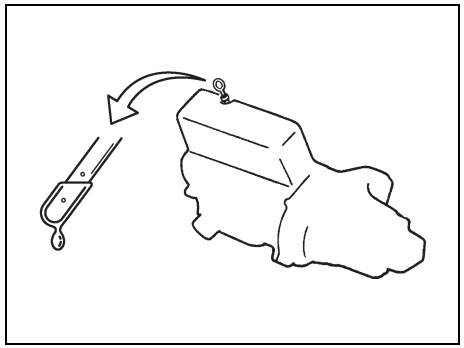

80G064

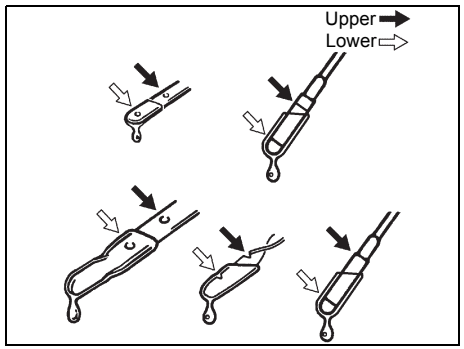

80G064

It is important to keep the engine oil at the correct level for proper lubrication of your vehicle's engine. Check the oil level with the vehicle on a level surface. The oil level indication may be inaccurate if the vehicle is on a slope. The oil level should be checked either before starting the engine or at least 5 minutes after stopping the engine.

Pull out the oil dipstick, wipe the oil off with a clean cloth, insert the dipstick all the way into the engine, and then remove it again. The oil on the stick should be between the upper and lower limits shown on the stick.
If the oil level indication is near the lower limit, add enough oil to raise the level to the upper limit.

NOTICE
Failure to check the oil level regularly could lead to serious engine trouble due to insufficient oil.

Refilling

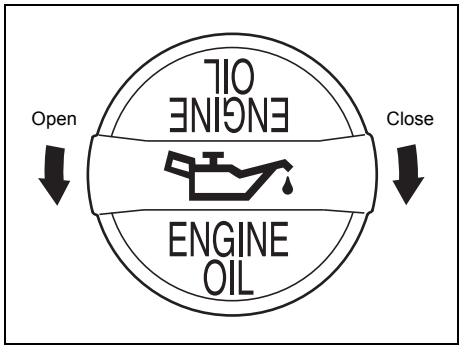

86T0033

Remove the oil filler cap and pour oil slowly through the filler hole to bring the oil level to the upper limit on the dipstick. Be careful not to overfill the oil. Too much oil is almost as bad as too little oil. After refilling, start the engine and allow it to idle for about a minute. Stop the engine, wait about 5 minutes and check the oil level again.

Changing Engine Oil and Filter

Drain the engine oil while the engine is still warm.

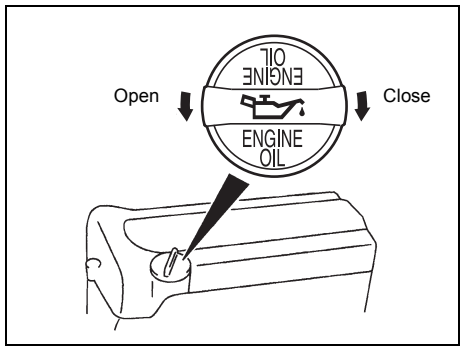

86T0034

1) Remove the oil filler cap.
2) Place a drain pan under the drain plug.
3) Using a wrench, remove the drain plug and drain the engine oil.

⚠ CAUTION

The engine oil temperature may be high enough to burn your fingers when the drain plug is loosened. Wait until the drain plug is cool enough to touch with your bare hands.

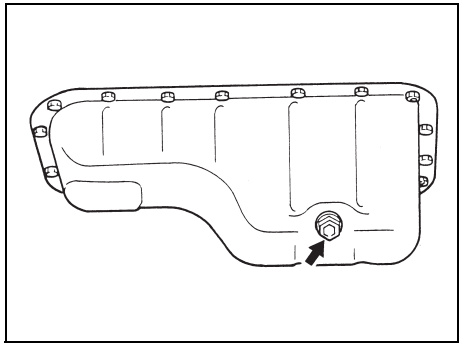

60G306

Tightening torque for drain plug
35 Nm (3.6 kg-m, 25.8 lb-ft)

⚠ WARNING

Engine oil can be hazardous. Children and pets may be harmed by swallowing new or used oil. Keep new and used oil and used oil filters away from children and pets.
Repeated, prolonged contact with used engine oil may cause skin cancer.
Brief contact with used oil may irritate skin.

(Continued)

⚠ WARNING

(Continued)
To minimize your exposure to used oil, wear a long-sleeve shirt and moisture-proof gloves (such as dishwashing gloves) when changing oil. If oil contacts your skin, wash thoroughly with soap and water.
Launder any clothing or rags if it is with oil.
Recycle or properly dispose of used oil and filters.

4) Reinstall the drain plug with new gasket. Tighten the plug with a wrench to the specified torque.

Oil Filter Replacement

1) Using an oil filter wrench, turn the oil filter counterclockwise and remove it.
2) Using a clean rag, wipe off the mounting surface on the engine where the new filter will be seated.
3) Smear a small amount of engine oil around the rubber gasket of the new oil filter.
4) Screw the new filter by hand until the filter gasket contacts the mounting surface.

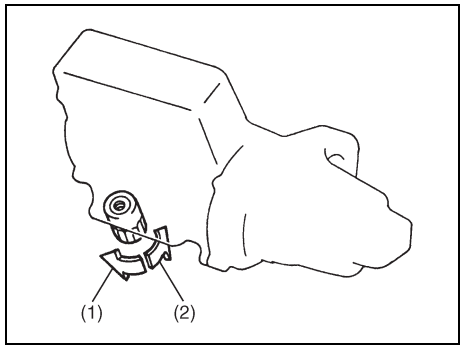

54G092

(1) Loosen
(2) Tighten

Tightening (viewed from filter top)

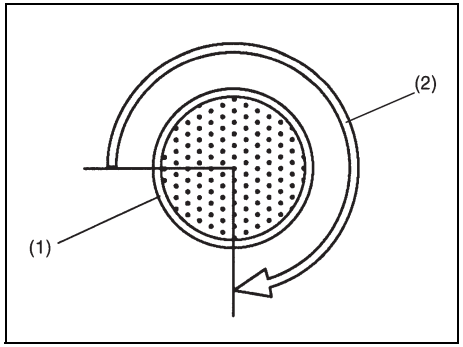

54G093

(1) Oil filter
(2) 3/4 turn

NOTICE

To tighten the oil filter properly, it is important to accurately identify the position at which the filter gasket first contacts the mounting surface.

5) Tighten the filter as specified below from the point of contact with the mounting surface (or to the specified torque) using an oil filter wrench.

Tightening torque for oil filter
3/4 turn or
14 Nm (1.4 kg-m, 10.3 lb-ft)

NOTICE

To prevent oil leakage, make sure that the oil filter is tight, but do not over-tighten it.

Refill with Oil and Oil Leakage Check

1) Pour oil through the filler hole and install the filler cap.
   For the approximate capacity of the oil, refer to “Capacities” in “SPECIFICATIONS” section.
2) Start the engine and carefully check the oil filter and the drain plug for leakage. Run the engine at various speeds for at least 5 minutes.
3) Stop the engine and wait about 5 minutes. Check the oil level again and add oil if necessary. Check for leakage again.

NOTICE

- **When replacing the oil filter, it is recommended that you use a genuine SUZUKI replacement filter. If you use an aftermarket filter, make sure it is of equivalent quality and follow the manufacturer’s instructions.**
- **Oil leakage from the periphery of the oil filter or drain plug indicate incorrect installation or gasket damage. If you find any leakage or are not sure that the filter has been properly tightened, have the vehicle inspected by a SUZUKI dealer or a qualified workshop.**

Engine Coolant

Selection of Coolant

To maintain optimum performance and durability of your engine, use SUZUKI genuine coolant or equivalent.

This type of coolant is the best for cooling system for the following reasons:
- The coolant helps maintain proper engine temperature.
- It gives proper protection against freezing and boiling.
- It gives proper protection against corrosion and rust.

Failure to use the proper coolant can damage your cooling system. SUZUKI dealer or a qualified workshop can help you select the proper coolant.

NOTICE

To avoid damaging your cooling system:
- **Always use a high quality ethylene glycol base non-silicate type coolant diluted with distilled water at the correct mixture concentration.**
- **Check that the proper mix is 50/50 coolant to distilled water and in no case higher than 70/30. Concentrations greater than 70/30 coolant to distilled water will cause overheating conditions.**
- **Do not use straight coolant nor plain water.**
- **Do not add extra inhibitors or additives. They may not be compatible with your cooling system.**
- **Do not mix different types of base coolants. Doing so may result in accelerated seal wear and/or the possibility of severe overheating and extensive engine or automatic transmission damage.**

Coolant Level Check

Check the coolant level at the reservoir tank, not at the radiator. With the engine cool, the coolant level should be between “FULL” and “LOW” marks.

Adding Coolant

⚠ WARNING

Swallowing engine coolant can cause severe injury or death. Inhaling coolant mist or vapors or getting coolant in your eyes could result in severe injury.

- **Do not drink antifreeze or coolant solution. If swallowed, do not induce vomiting. Immediately contact a poison control center or a physician.**
- **Avoid inhaling coolant mist or hot vapors. If inhaled, remove to a fresh air area.**
- **If coolant gets in the eyes, flush with water and seek medical attention.**
- **Wash thoroughly after handling coolant.**
- **Keep engine coolant out of the reach of children and pets.**

NOTICE

- **The mixture you use should contain 50% concentration of antifreeze.**
- **If the lowest ambient temperature in your area is expected to be –35°C (–31°F) or below, use higher concentrations up to 60% following the instructions on the antifreeze container.**

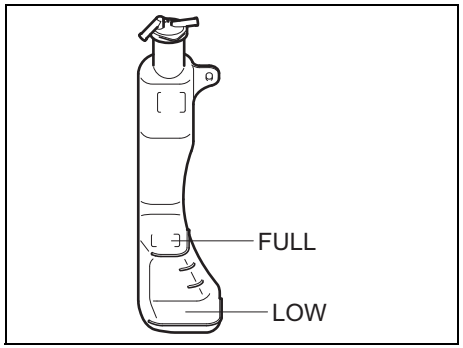

73R0110

If the coolant level is below “LOW” mark, coolant should be added. While the engine is cool, remove the reservoir tank cap and add coolant until the reservoir tank level reaches “FULL” mark. Never fill the reservoir tank above “FULL” mark.

NOTICE

When putting the cap on the reservoir tank, line up the mark on the cap and the mark on the tank. Failure to follow this can result in coolant leakage.

Coolant Replacement

Since special procedures are required, ask a SUZUKI dealer or a qualified workshop for this job.

Air Cleaner

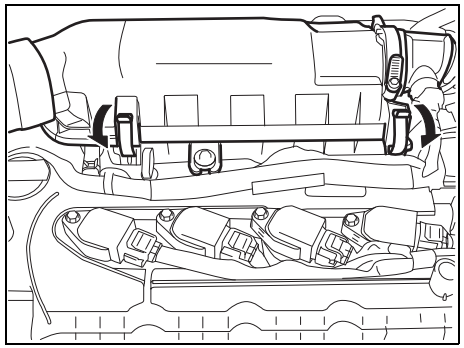

73R0112

If the air cleaner is clogged with dust, there will be greater intake resistance, resulting in decreased power output and increased fuel consumption.
Unclamp the side clamps and remove the element from the air cleaner case. If it appears to be dirty, replace it with a new one.
Clamp the side clamps securely.

Spark Plugs

For nickel spark plugs (traditional type):
You should inspect spark plugs periodically for carbon deposits. When carbon accumulates on a spark plug, a strong spark may not be produced. Remove carbon deposits with a wire or pin and adjust the spark plug gap.

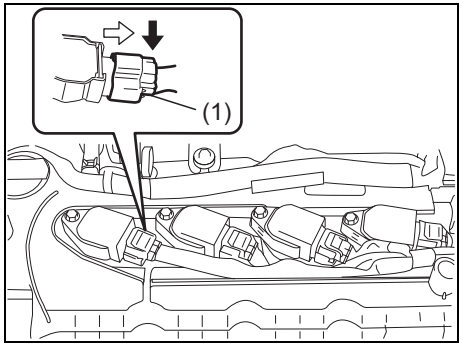

73R0119

To access the spark plug:
1) If necessary, disconnect the coupler (1) while pushing the release lever.
2) Remove the ignitor bolts.
3) Pull the spark plug boots out.

NOTE:
During installation, make sure that the wires, couplers, sealing rubber of air cleaner assy and washers, are correctly returned in place.

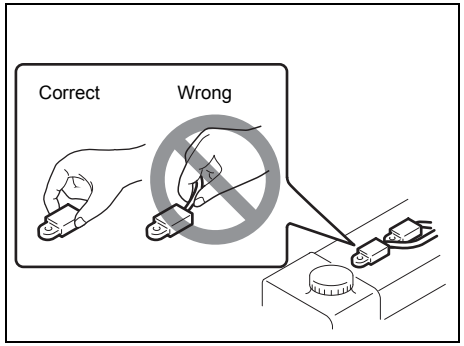

78K179

NOTICE

- **When pulling out the ignition coils, do not pull on the cable. Pulling on the cable can damage it.**
- **When servicing the iridium/platinum spark plugs (slender center electrode type plugs), do not touch the center electrode, as it is easy to damage.**

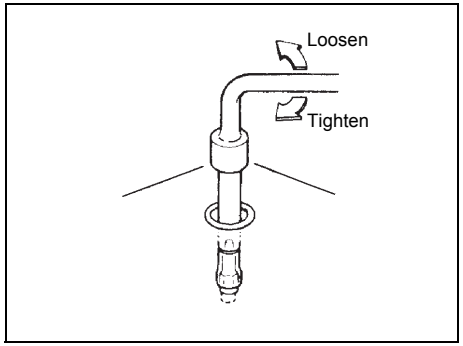

60G160S

NOTICE

- **When installing the spark plugs, screw them in with your fingers to avoid stripping the threads. Tighten the spark plugs with a torque wrench to 17.5 Nm (1.8 kg-m, 13.0 lb-ft). Do not allow contaminants to enter the engine through the spark plug holes when the plugs are removed.**
- **Never use spark plugs with the wrong thread size.**

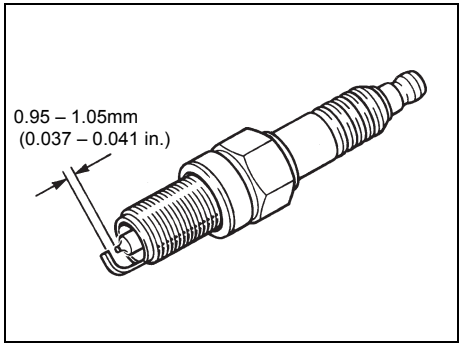

80G093

NOTICE

When replacing spark plugs, you should use the brand and type specified for your vehicle. For the specified plugs, refer to "SPECIFICATIONS" section in the end of this book. If you wish to use a brand of spark plug other than the specified plugs, consult a SUZUKI dealer or a qualified workshop.

Gear Oil

Specified Gear Oil

When adding gear oil, use gear oil with the appropriate viscosity and grade as shown in the chart below.

We highly recommend you use:
“SUZUKI GEAR OIL 75W-80” for manual transmission gear oil.

Manual Transmission oil

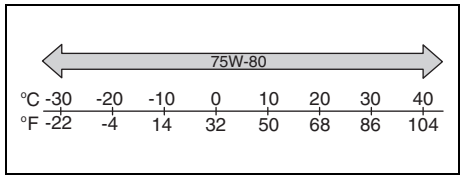

68LM728

Gear Oil Level Check

Manual Transmission

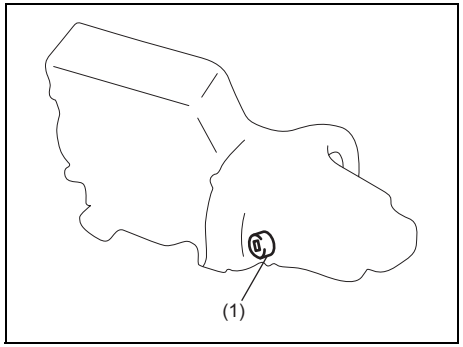

60MH047

(1) Oil filler and level plug

To check the gear oil level, use the following procedure:

1) Park the vehicle on a level surface with the parking brake applied. Then, stop the engine.
2) Remove the oil filler and level plug (1).
3) If gear oil flows from the plug hole, the oil level is correct. Reinstall the plug. If gear oil does not flow from the plug hole, add oil through the filler plug hole until oil flows a little from the plug hole.
4) If the oil level is low, add gear oil through the oil filler and level plug hole (1) until the oil level reaches the bottom of the filler hole, then reinstall the plug.

   Tightening torque for oil filler and level plug (1)
   Manual Transmission:
   21 Nm (2.1 kg-m, 15.5 lb-ft)

⚠ CAUTION

After driving the vehicle, the gear oil temperature may be high enough to burn you. Wait until the oil filler and level plug is cool enough to touch with your bare hands before inspecting gear oil level.

NOTICE

When tightening the plug, apply the following sealing compound or equivalent to the plug threads to prevent oil leakage.

SUZUKI Bond No. “1216E” or “1217G”

Gear Oil Change

Since special procedures, materials and tools are required, ask a SUZUKI dealer or a qualified workshop for this job.

Clutch

Clutch Pedal

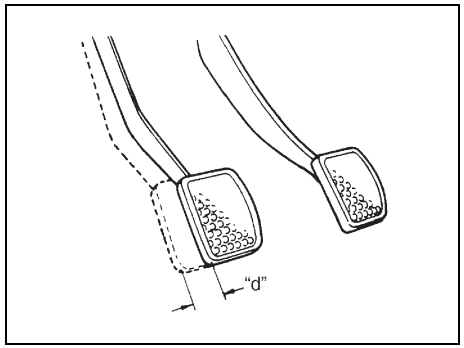

54G274

Clutch pedal play "d":
MAX. 10 mm (0.39 in.)

Measure the clutch pedal play by moving the clutch pedal with your hand and measuring the distance it moves until you feel slight resistance. The play in the clutch pedal should be between the specified values. If the play is more or less than the above, or clutch dragging is felt with the pedal fully depressed, have the clutch inspected by an authorized SUZUKI dealer.

Clutch Fluid

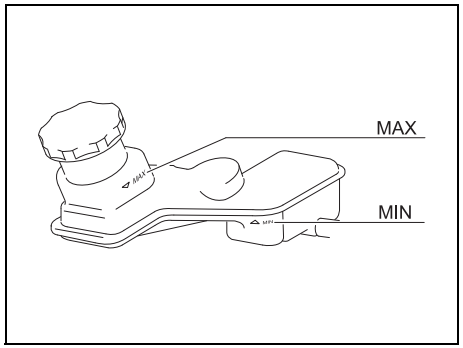

73R0115

Check the clutch pedal for smooth operation and clutch fluid level from time to time. If clutch dragging is felt with the pedal fully depressed, have the clutch inspected by a SUZUKI dealer or a qualified workshop. If the clutch fluid level is near "MIN" line, fill it up to "MAX" line with DOT3 brake fluid.

NOTICE

Clutch fluid is supplied from brake fluid reservoir. If your clutch fluid level is increased or near the "MIN" line, there is a possibility of clutch or brake fluid leakage or abnormal wear of clutch.
Have your vehicle inspected immediately by a SUZUKI dealer or a qualified workshop.

Automatic Transmission (AT) Fluid

Specified Fluid

Use an automatic transmission fluid SUZUKI AT OIL AW-1.

Fluid Level Check

NOTICE

Driving with too much or too little fluid can damage the transmission.

You must check the fluid level with the automatic transmission fluid at normal operating temperature.

To check the fluid level:

1) To warm up the transmission fluid, drive the vehicle or idle the engine until the engine coolant temperature heats up enough.
2) Then drive for ten more minutes.

NOTICE

Be sure to use the specified automatic transmission fluid. Using automatic transmission fluid other than SUZUKI AT OIL AW-1 may damage the automatic transmission of your vehicle.

NOTE:
Do not check the fluid level if you have just driven the vehicle for a long time at high speed, if you have driven in city traffic in hot weather. Wait until the fluid cools down (about 30 minutes), or the fluid level indication will not be correct.

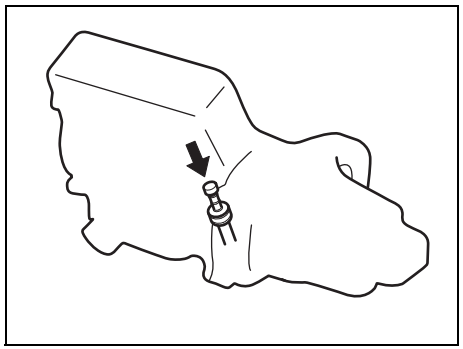

52RM70300

3) Park your vehicle on level ground.
4) Apply the parking brake and then start the engine in “P” (Park). Let it idle for two minutes and keep it running during the fluid level check.
5) With your foot on the brake pedal, move the gearshift lever through each gear position, pausing for about three seconds in each position. Then move it back to “P” (Park) position.

⚠ WARNING

Be sure to depress the brake pedal when moving the gearshift lever, or the vehicle can move suddenly.

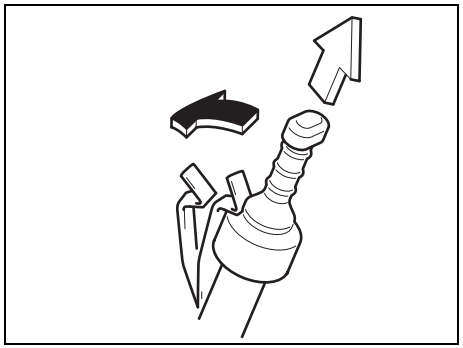

68LM707

6) The handle of the A/T fluid dipstick is colored red for easy identification.
Remove the dipstick, wipe the oil off with a clean cloth and push it back in until the cap seats. Then pull out the dipstick.

7) Check both sides of the dipstick, and read the lowest level. The fluid level should be between the two marks in hot range on the dipstick.

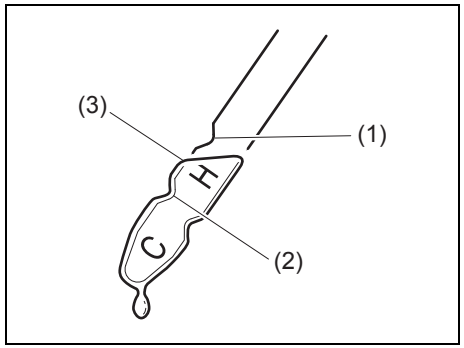

72R0131

(1) FULL HOT
(2) LOW HOT
(3) The lowest point = Fluid level

8) Add just enough specified fluid through the dipstick hole to fill the transmission oil to the proper level.

NOTICE
After checking or adding oil, be sure to insert the dipstick securely.

Changing Oil

Since special procedures, materials, and tools are required to change the automatic transmission oil, ask a SUZUKI dealer or a qualified workshop for this job.

Brakes

Brake Fluid

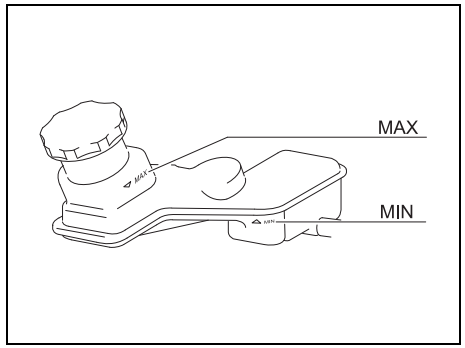

73R0116

Check the brake fluid level by looking at the reservoir in the engine compartment. Check that the fluid level is between “MAX” and “MIN” lines.

⚠ WARNING

- **Failure to follow the guidelines below can result in personal injury or serious trouble in the brake system.**
  - **If the brake fluid in the reservoir drops below a certain level, the brake warning light on the instrument panel will come on (the engine must be running with the parking brake fully disengaged). Should the light come on, immediately ask a SUZUKI dealer or a qualified workshop to inspect the brake system.**
  - **A rapid fluid loss indicates a leakage in the brake system. In this case, immediately ask a SUZUKI dealer or a qualified workshop to inspect the brake system.**
  - **Do not use any fluid other than SAE J1703 or DOT3 brake fluid. Do not use reclaimed fluid or fluid that has been stored in old or open containers. It is essential that foreign particles and other liquids are kept out of the brake fluid reservoir.**

(Continued)

⚠ WARNING

(Continued)

- **Brake fluid is harmful or fatal if swallowed, and harmful if it comes in contact with skin or eyes. If swallowed, do not induce vomiting. Immediately contact a poison control center or a physician. If brake fluid gets in eyes, flush eyes with water and seek medical attention. Wash thoroughly after handling. Solution can be poisonous to animals. Keep out of reach of children and animals.**

NOTICE

- **If your brake fluid level is near "MIN" line, there is a possibility of brake pad and/or shoe wear and brake fluid leakage. In this case, ask a SUZUKI dealer or a qualified workshop to inspect the brake system.**
- **Brake fluid can damage painted surfaces. Use caution when refilling the reservoir.**

NOTE:

- *The fluid level can be expected to gradually fall as the brake pad and/or shoe wear.*
- *Brake fluid absorbs water over time and brake fluid with high water content may cause vapor lock or brake system malfunction.*
  Replace the brake fluid according to the maintenance schedule in this owner's manual.

Brake Pedal

Check if the brake pedal stops at the regular height without “spongy” feeling when you depress it. If not, have the brake system inspected by a SUZUKI dealer or a qualified workshop. If you doubt the brake pedal for the regular height, check it as follows:

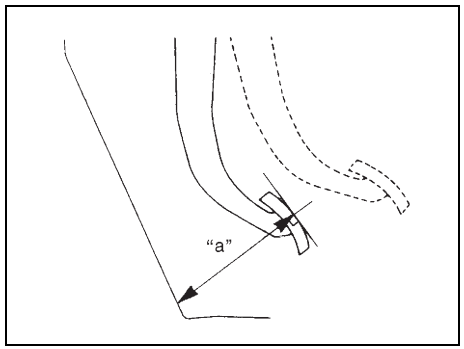

54G108

Pedal to floor carpet minimum distance “a”:

LHD	MT	61 mm (2.4 in.)
	AT	57 mm (2.2 in.)
RHD	47 mm (1.8 in.)	

With the engine running, measure the distance between the brake pedal and floor carpet when the pedal is depressed with approximately 30 kg (66 lbs) of force. The minimum distance required is as specified. Since your vehicle’s brake system is self-adjusting, there is no need for pedal adjustment.
If the pedal to floor carpet distance as measured above is less than the minimum distance required, have your vehicle inspected by a SUZUKI dealer or a qualified workshop.

NOTE:
When measuring the distance between the brake pedal and floor wall, be sure not to include the floor mat or rubber on the floor wall in your measurement.

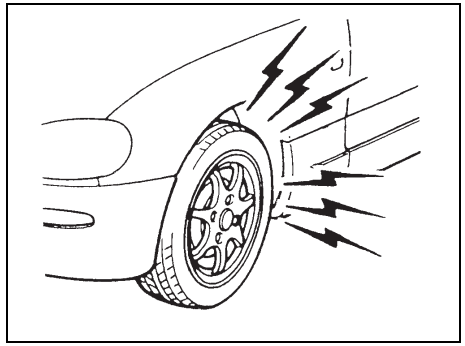

60G104S

⚠ WARNING

If the brake pad lining becomes worn and it has reached its minimum thickness, squealing noise sounds during braking.
If you hear this noise, have the vehicle inspected immediately by an authorized SUZUKI dealer.
Continued driving with this condition can cause an accident.

⚠ CAUTION

If you experience any of the following problems with your vehicle's brake system, have the vehicle inspected immediately by an authorized SUZUKI dealer.
- **Poor braking performance**
- **Uneven braking (brakes not working uniformly on all wheels)**
- **Excessive pedal travel**
- **Brake dragging**

Parking Brake

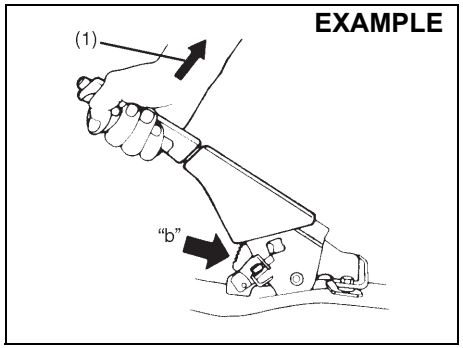

54G109

Ratchet tooth specification "b":
4th – 9th
Lever pull force (1):
200 N (20 kg, 45 lbs)

Check the parking brake for proper adjustment by counting the number of clicks made by the ratchet teeth as you slowly pull up on the parking brake lever to the point of full engagement. The parking brake lever should stop between the specified ratchet teeth and the rear wheels should be securely locked. If the parking brake is not properly adjusted or the brakes drag is suspected even after the lever has been fully released, have the parking brake inspected and/or adjusted by a SUZUKI dealer or a qualified workshop.

Brake Discs and Brake Drums

Brake disc

Brake location	Minimum thickness
Front wheels	20.0 mm (0.8 in.)

Brake drum

Brake location	Maximum inner diameter
Rear wheels	222 mm (8.7 in.)

If the measured thickness or inner diameter of the most worn part falls below or exceeds the value indicated above, the parts should be replaced with a new one.
The measurement involves disassembling each brake and requires the use of a micrometer or caliper, which must be done according to the instructions described in the relevant service manual or available from the relevant repair information site.

Steering Wheel

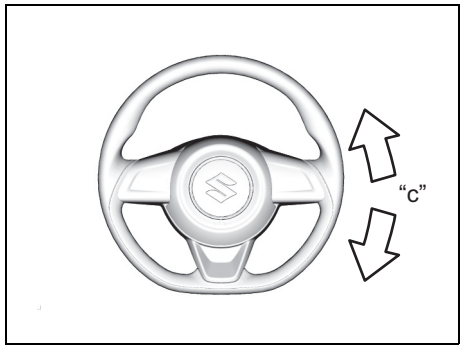

73R0117

Steering wheel play "c":
0 – 30 mm (0.0 – 1.2 in.)

Check the play of the steering wheel by gently turning it from left to right and measuring the distance that it moves before you feel slight resistance. The play should be between the specified values.

Check that the steering wheel turns easily and smoothly without rattling by turning it all the way to the right and to the left while driving very slowly in an open area. If the amount of free play is outside the specification or you find anything else to be wrong, an inspection must be performed by a SUZUKI dealer or a qualified workshop.

Tyres

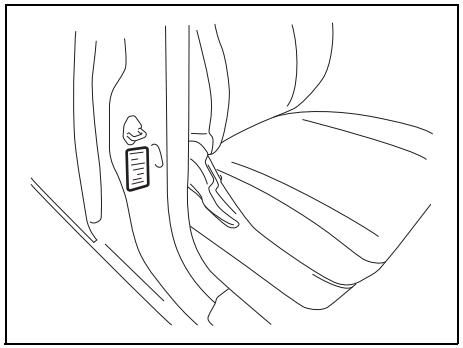

73R0118

The front and rear tyre pressure specifications for your vehicle are listed in the tyre information label. Both front and rear tyres should have the specified tyre pressure.

Tyre Inspection

Inspect your vehicle's tyres at least once a month or before long trip by performing the following checks:

1) Measure the air pressure with a tyre gauge. Adjust the pressure if necessary. Remember to check the spare tyre, too.

⚠ WARNING

- **Air pressures should be checked when the tyres are cold or you may get inaccurate readings.**
- **Check the inflation pressure from time to time while inflating the tyre gradually, until the specified pressure is obtained.**
- **Never underinflate or over-inflate the tyres.**
  Underinflation can cause unusual handling characteristics or can cause the rim to slip on the tyre bead, resulting in an accident or damage to the tyre or rim.
  Overinflation can cause the tyre to burst, resulting in personal injury. Overinflation can also cause unusual handling characteristics which may result in an accident.

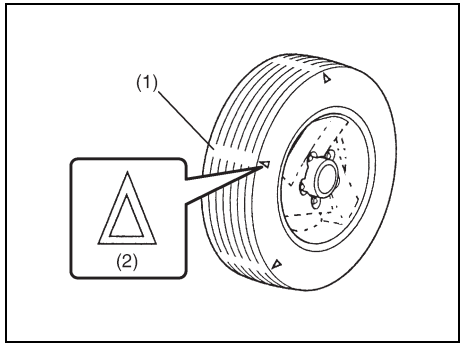

54G136

(1) Tread wear indicator
(2) Indicator location mark

2) Check that the depth of the tread groove is more than 1.6 mm (0.06 in.). To help you check this, the tyres have molded-in tread wear indicators in the grooves. When the indicators appear on the tread surface, the remaining depth of the tread is 1.6 mm (0.06 in.) or less and the tyre should be replaced.
3) Check for abnormal wear, cracks and damage. Any tyres with cracks or other damage should be replaced. If any tyres show abnormal wear, have them inspected by a SUZUKI dealer or a qualified workshop.

⚠ CAUTION

Hitting curbs and running over rocks can damage tyres and affect wheel alignment. Have tyres and wheel alignment checked periodically by a SUZUKI dealer or a qualified workshop.

4) Check for loose wheel nuts.
5) Check that there are no nails, stones or other objects sticking into the tyres.

⚠ WARNING

- **Your SUZUKI vehicle is equipped with tyres which are all the same type and size. This is important to ensure proper steering and handling of the vehicle. Never mix tyres of different size or type on the four wheels of your vehicle. The size and type of tyres used should be only those approved by SUZUKI as standard or optional equipment for your vehicle.**
- **Replacing the wheels and tyres equipped on your vehicle with certain combinations of aftermarket wheels and tyres can significantly change the steering and handling characteristics of your vehicle.**
- **Therefore, use only those wheel and tyre combinations approved by SUZUKI as standard or optional equipment for your vehicle.**

NOTICE

Replacing the original tyres with tyres of a different size may result in false speedometer or odometer readings. Check with a SUZUKI dealer or a qualified workshop before purchasing replacement tyres that differ in size from the original tyres.

Tyre Rotation

5-tyre rotation

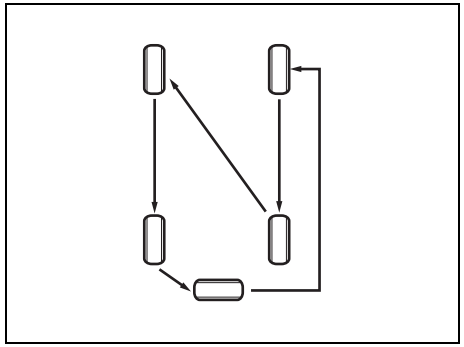

80JK040

4-tyre rotation

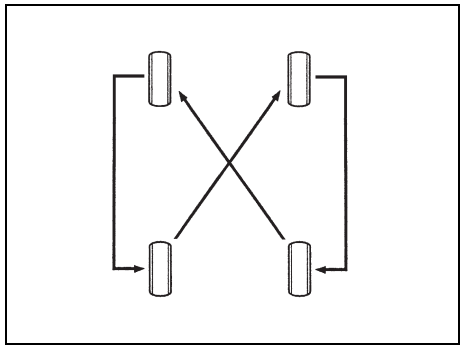

54G114

To avoid uneven wear of your tyres and to prolong their life, rotate the tyres as illustrated. Tyres should be rotated every 10000 km (6000 miles). After rotation, adjust front and rear tyre pressures to the specification listed in your vehicle's Tyre Information Label.

NOTE:
For Mexico:
For additional instruction, refer to the "SUPPLEMENT" section at the end of this book.

Lead-acid Battery

⚠ WARNING

- **Batteries produce flammable hydrogen gas. Keep flames and sparks away from the battery or an explosion may occur. Never smoke when working in the vicinity of the battery.**
- **When checking or servicing the battery, disconnect the negative cable. Be careful not to cause a short circuit by allowing metal objects to contact the battery posts and the vehicle at the same time.**
- **To avoid harm to yourself or damage to your vehicle or battery, follow the jump starting instructions in "EMERGENCY SERVICE" section of this manual if it is necessary to jump-start your vehicle.**
- **Diluted sulfuric acid spilled from battery can cause blindness or severe burns. Use proper eye protection and gloves. Flush eyes or body with ample water and get medical care immediately if suffered. Keep batteries out of reach of children.**

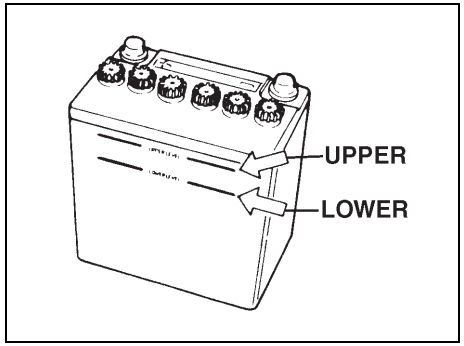

54G118

For maintenance-free battery (cap-less type), you need not add water. For traditional type battery, which has water filler caps, the level of the battery fluid must be kept between the “UPPER” and the “LOWER” level lines at all times. If the level is found to be below the “LOWER” level line, add distilled water to the “UPPER” level line. You should periodically check the battery, battery terminals, and battery hold-down bracket for corrosion. Remove corrosion using a stiff brush and ammonia mixed with water, or baking soda mixed with water. After removing corrosion, rinse with clean water.

If your vehicle is not going to be driven for a month or longer, disconnect the cable from the negative terminal of the battery to help prevent discharge.

⚠ WARNING

If the battery is used with battery level being less than the lower level line “MIN” (2), it may cause reduced battery life, an exothermic heat, or an explosion by hydrogen gas occurring from the battery. Do not use the battery with battery level being less than the lower level line “MIN” (2).

NOTICE

If the battery liquid is added more than the upper level line “MAX” (1), liquid may leak by vibrations during driving or liquid may spray out in some case depending on the condition of battery charging. These may cause damage to the parts near the battery. If the battery liquid overspills, immediately wash away with water. Do not add the battery liquid more than the upper level line “MAX” (1).

NOTE:
The battery liquid is consumed when the battery is used. If the level is found to be less than the center of the upper level line “MAX” (1) and the lower level line “MIN” (2), add distilled water till it reaches the upper level line “MAX” (1).

Replacement of the Battery

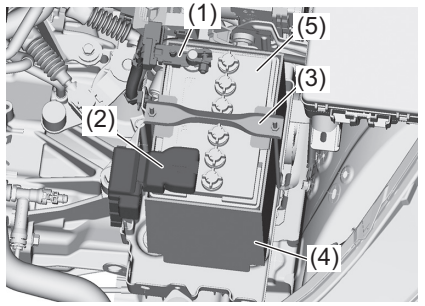

86T0021

To remove the battery:
1) Disconnect the negative cable (1).
2) Disconnect the positive cable (2).
3) Remove the retainer nuts (3) and remove the retainer (4).
4) Remove the battery (5).

To install the battery:
1) Install the battery in the reverse order of removal.
2) Tighten the bracket bolt and battery cables securely.

⚠ WARNING

Batteries contain toxic substances including sulfuric acid and lead. They could have potential negative consequences for the environment and human health. Used batteries must be disposed of or recycled according to applicable rules or regulations and must not be disposed of with ordinary household trash. Make sure not to tip over the battery when you remove it from the vehicle. Otherwise, sulfuric acid could run out and you might get injury.

Fuses

Your vehicle has three types of fuses, as described below:

Main fuse
The main fuse takes current directly from the battery.

Primary fuses
These fuses are between the main fuse and individual fuses, and are for electrical load groups.

Individual fuses
These fuses are for individual electrical circuits.

To remove a fuse, use the fuse puller (1) provided in the relay box cover.

Relay box cover

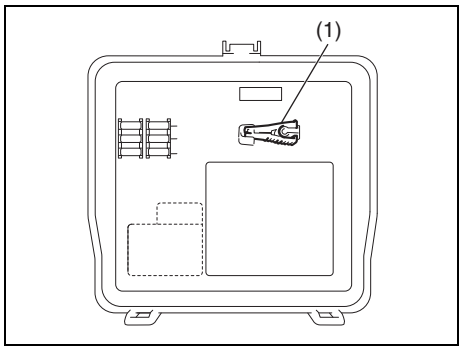

73R0204

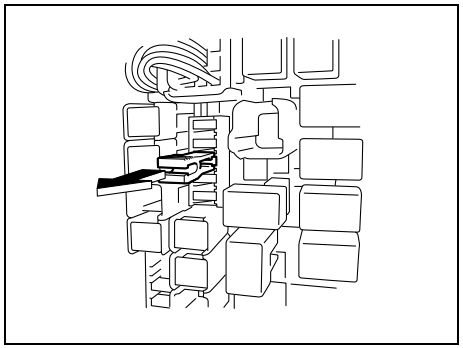

63J095

Fuses in Engine Compartment



73R0195

(1) Main fuse box
(2) Relay box

Main fuse box

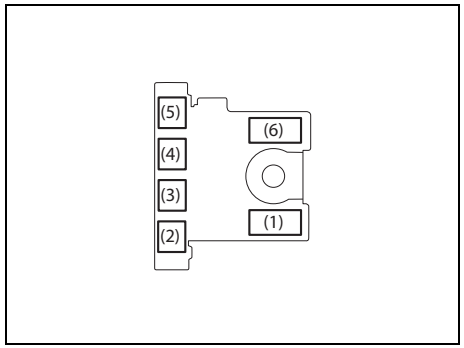

86T0111

Relay box

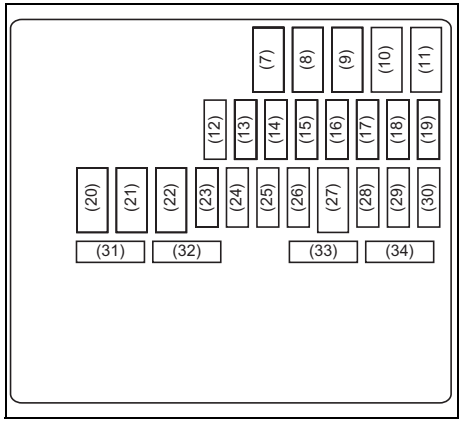

72R0115

MAIN FUSE / PRIMARY FUSE		
(1)	–	Blank
(2)	100 A	FL2
(3)	80 A	FL3
(4)	100 A	FL4
(5)	50 A	FL5
(6)	200 A	FL6
(7)	30 A	Starting motor
(8)	40 A	Blower fan
(9)	–	Blank
(10)	40 A	ABS motor
(11)	40 A	Ignition switch
(12)	30 A	Back up
(13)	5 A	ISG B
(14)	20 A	Front fog light
(15)	–	Blank
(16)	25 A	ABS SOL
(17)	–	Blank
(18)	10 A	Compressor
(19)	–	Blank
(20)	30 A	Radiator fan
(21)	–	Blank

(22)	–	Blank
(23)	25 A	Headlight HI
(24)	15 A	Headlight L
(25)	15 A	Headlight R
(26)	–	Blank
(27)	50 A	Ignition switch -2
(28)	15 A	Transmission
(29)	15 A	FI
(30)	–	Blank
(31)	15 A	Headlight HI L
(32)	15 A	Headlight HI R
(33)	5 A	Starting Signal
(34)	–	Blank

The main fuse, primary fuses and some of the individual fuses are located in the engine compartment. If the main fuse blows, no electrical component will function. If a primary fuse blows, no electrical component in the corresponding load group will function. When replacing the main fuse, a primary fuse or an individual fuse, use a genuine SUZUKI replacement parts or equivalent for individual fuses.
To remove a fuse, use the fuse puller provided in the fuse box. The amperage of each fuse is shown in the back of the fuse box cover.

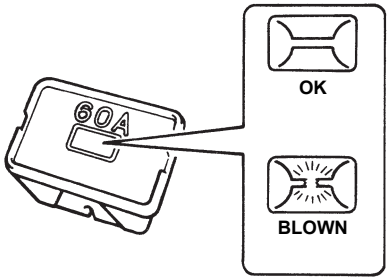

60G111

⚠ WARNING

If the main fuse or a primary fuse blows, have your vehicle inspected by a SUZUKI dealer or a qualified workshop. Always use a genuine SUZUKI replacement. Never use a substitute such as a wire even for a temporary repair, or extensive electrical damage and a fire can result.

NOTE:
Make sure that the fuse box always carries spare fuses.

Fuses under Dashboard

1) Remove the clips (A) and remove the Instrument panel undercover (1).

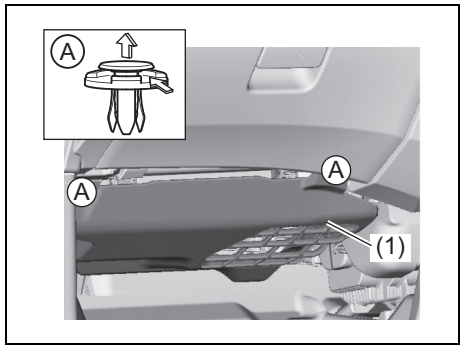

86T0023

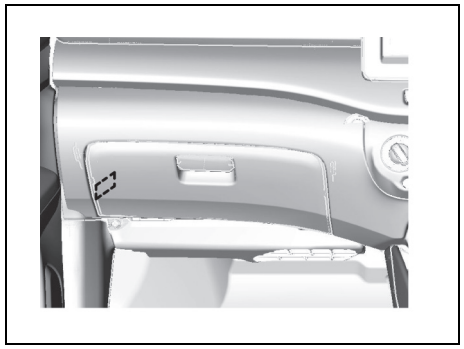

73R0121

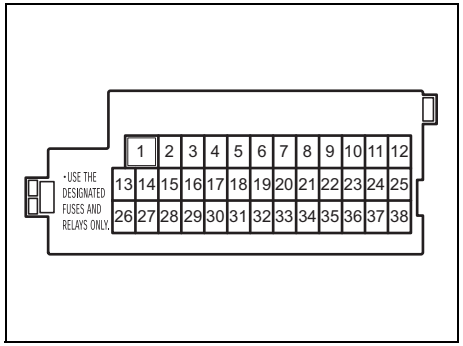

80P0185

PRIMARY FUSE		
(1)	30 A	Power window
(2)	10 A	Meter
(3)	15 A	Ignition coil
(4)	5 A	Ignition-1 signal 2
(5)	20 A	Shift lever
(6)	20 A	S/R
(7)	–	Blank
(8)	20 A	DOOR LOCK
(9)	15 A	Steering lock
(10)	10 A	Hazard
(11)	5 A	A-STOP
(12)	10 A	RR FOG
(13)	5 A	ABS control module
(14)	15 A	REAR A/C
(15)	5 A	IG1 SIG3
(16)	10 A	Dome light-2
(17)	5 A	Dome light
(18)	15 A	Radio
(19)	5 A	CONT
(20)	5 A	KEY2
(21)	20 A	Power window timer

(22)	5 A	KEY
(23)	15 A	Horn
(24)	5 A	Tail light (Left)
(25)	10 A	Tail light
(26)	10 A	Airbag
(27)	10 A	Ignition-1 signal
(28)	10 A	Back up light
(29)	5 A	–
(30)	20 A	Rear defogger
(31)	10 A	–
(32)	15 A	ACC2
(33)	5 A	ACC
(34)	10 A	Wiper
(35)	5 A	Ignition-2 signal
(36)	15 A	Washer
(37)	25 A	Front wiper
(38)	10 A	Stop light

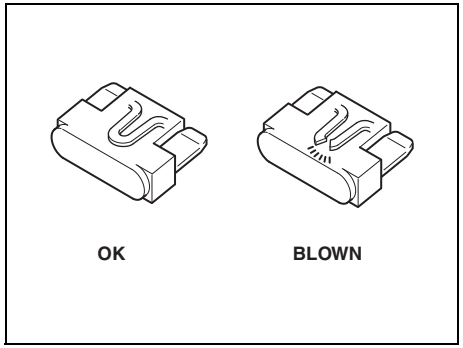

81A283

⚠ WARNING

Always replace a blown fuse with a fuse of the correct amperage. Never use a substitute such as aluminum foil or wire to replace a blown fuse. If you replace a fuse and the new one blows in a short period of time, you may have a major electrical problem. Have your vehicle inspected immediately by a SUZUKI dealer or a qualified workshop.

NOTE:
According to the vehicle specifications, fuse setting may be different from the specifications which are shown in the above tables.

Headlight Aiming

Since special procedures are required, ask a SUZUKI dealer or a qualified workshop for this job.

Bulb Replacement

⚠ CAUTION

- **Light bulbs can be hot enough to burn your finger right after turning off lights. This is true especially for halogen headlight bulbs. Replace the bulbs after they become cool enough.**
- **The headlight bulbs are filled with pressurized halogen gas. They can burst and injure you if they are hit or dropped. Handle them carefully.**
- **To avoid injury by sharp-edged parts of the body, wear gloves and a long-sleeved shirt when replacing light bulbs.**

NOTICE

The oils from your skin may cause a halogen bulb to overheat and burst when the lights are on. Grasp a new bulb with a clean cloth.

NOTICE

Frequent bulb replacement indicates the need for an inspection of the electrical system. This should be carried out by a SUZUKI dealer or a qualified workshop.

NOTE:
The inner surface of lens such as the headlights or the rear combination lights may be clouded or dew condensation may occur by driving on a rainy day or washing the vehicle. This is a temporary phenomenon caused by temperature difference between the inside and the outside of the lights. (This is the same phenomenon as the windows are clouded on a rainy day.) Also, it sometimes seems that water gets into the lights because of waterdrop on the edge of the lens. This is a temporary phenomenon caused by water adherence to the outside of the lights. The above-mentioned phenomena are not vehicle malfunction. However, if water is piled up in the lights or large waterdrop adheres to the inner surface of lens, have your vehicle inspected by an authorized SUZUKI dealer.

Non-disassembled Type Lights

Since the lights shown below are non-disassemble type, you cannot replace a bulb. Replace the target assembly if any bulb is defective.

If you need to replace the assembly, ask your SUZUKI dealer.

- Side turn signal light/hazard warning light on fender or outside rearview mirrors
- High mount stop light
- Tail/stop light

Headlight

Low beam

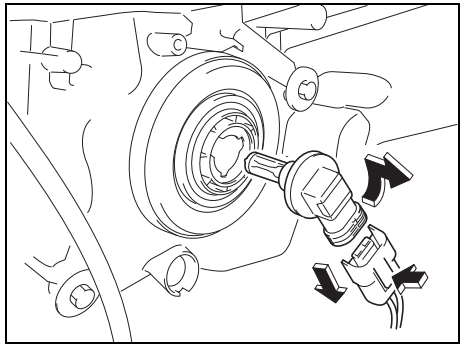

73R0123

Open the engine food while the engine is stopped.

Disconnect the coupler with pushing the lock release. Turn the bulb holder counterclockwise and remove it.

High beam

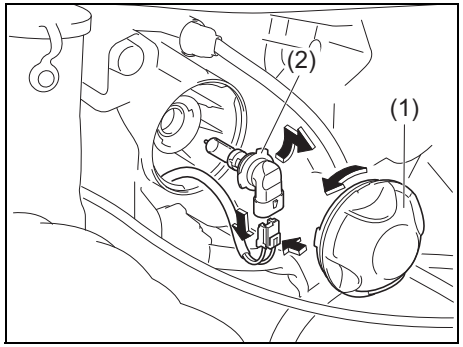

73R0134

Open the engine food while the engine is stopped.

Turn the cover (1) counterclockwise and remove it.

Turn the bulb (2) holder counterclockwise and remove it. Disconnect the coupler with pushing the lock release.

Front Turn Signal Light
Front Position Light

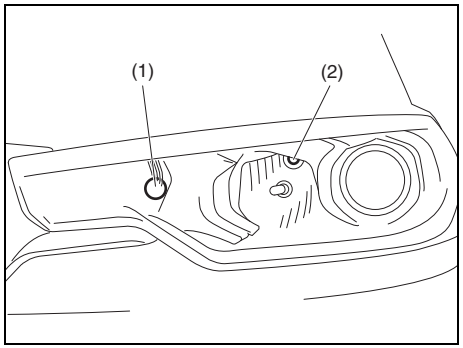

73R0124

(1) Front turn signal light
(2) Front position light

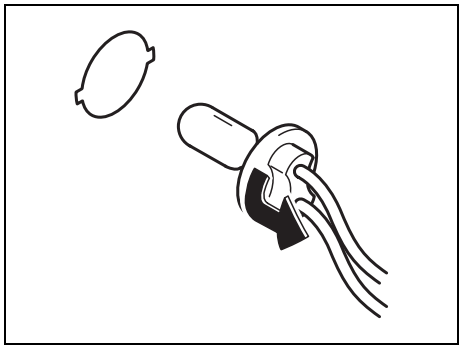

68PH0073

1) Open the engine hood while the engine is stopped. To remove the bulb holder of the front turn signal light or the front position light from the light housing, turn the holder counterclockwise and pull it out.

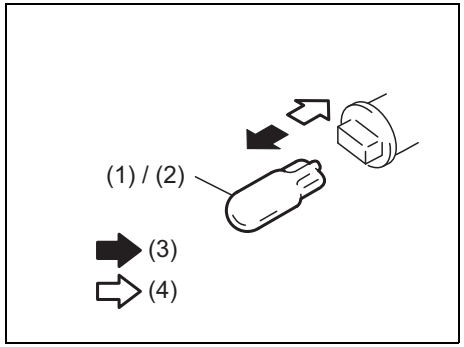

73R0215

(3) Removal
(4) Installation

2) To remove and install the bulb of the front turn signal light (1) or the front position light (2), simply pull out or push in the bulb.

Side Turn Signal Light

Outside rearview mirror type

LED is used. It is recommended that you take your vehicle to a SUZUKI dealer or a qualified workshop for bulb replacement since special procedures are required.

Fender type

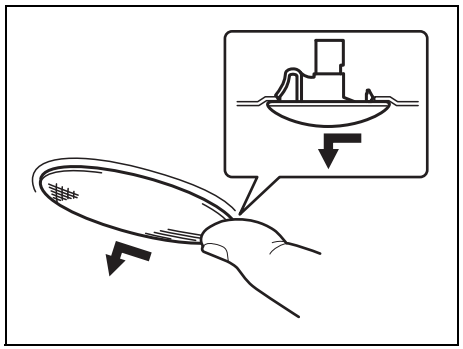

64J195

Since the bulb is built-in type, replace it as the light assembly. Remove the light assembly by sliding the light housing leftward with your finger.

Front Fog Light (if equipped)

1) Start the engine. Turn the steering wheel to the opposite side of the fog light to be replaced to replace the bulb easily. Then turn off the engine.

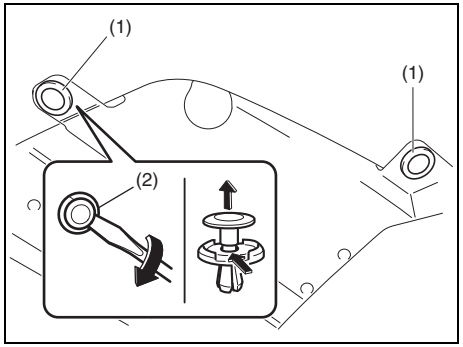

73R0125

2) Insert a flat-bladed screwdriver into the hole (2) and remove the clips (1) by twist the driver as shown in the illustration.

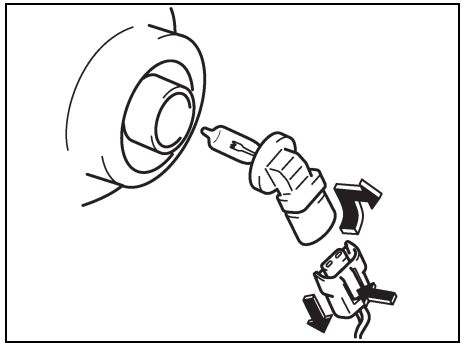

80JM071

3) Open the fender cover. Disconnect the coupler with pushing the lock release. Turn the bulb holder counterclockwise and remove it.

Rear Combination Light (Tail, Stop, Turn Signal, etc.)

For LED tail / stop light, it is recommended that you take your vehicle to a SUZUKI dealer or a qualified workshop for bulb replacement since special procedures are required.

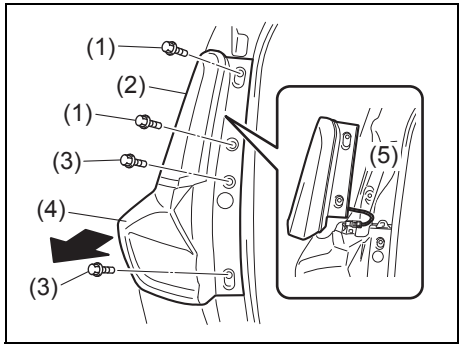

73R0213

1) With the tailgate opened, remove the bolts (1) and pull the tail light (2) firmly to the rearward.

NOTICE
Do not pull the tail light (2) by force. In the case of the type which tail light turns on, it may cause an electric wiring (5) (if equipped) cutoff.

NOTE:
When it is difficult to remove the rear combination light from the body at a low temperature (10 deg. C or less), pour water between the body and the rear combination light to make the removal smooth.

2) Remove the bolts (3) and pull the rear combination light (4) firmly to the rearward.

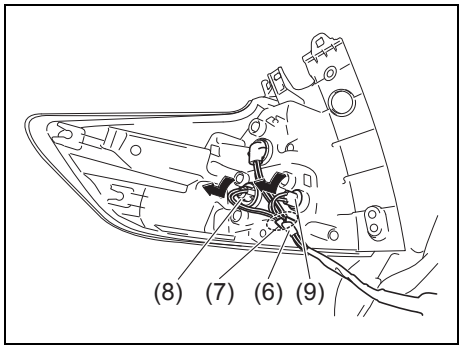

73R0214

3) Remove the wire (6) from a clamp (7).
4) To remove the bulb holder of the rear turn signal light (8) or the reversing light (9) from the light housing, turn the holder counterclockwise and pull it out.

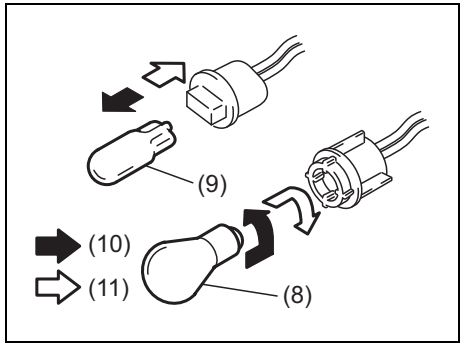

68PM00721

(10) Removal
(11) Installation

5) To remove the bulb of the rear turn signal light (8) from the bulb holder, push in the bulb and turn it counterclockwise. To install a new bulb, push it in and turn it clockwise.
To remove and install the bulb of the reversing light (9), simply pull out or push in the bulb.

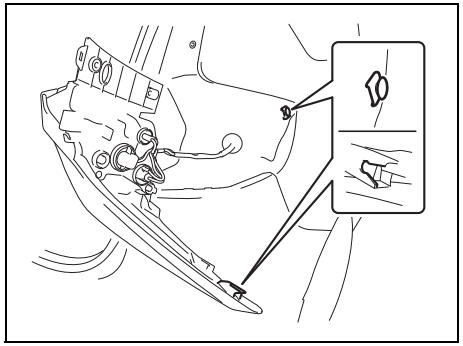

73R0188

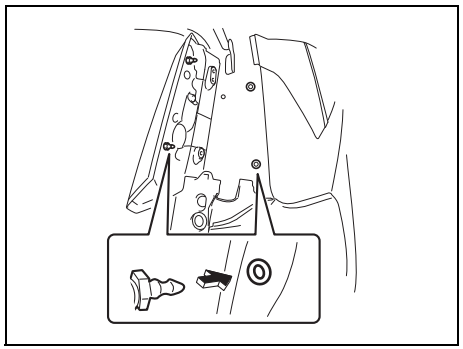

73R0189

NOTE:
When reinstalling the light housing, check that the clips are properly attached.

License Plate Light

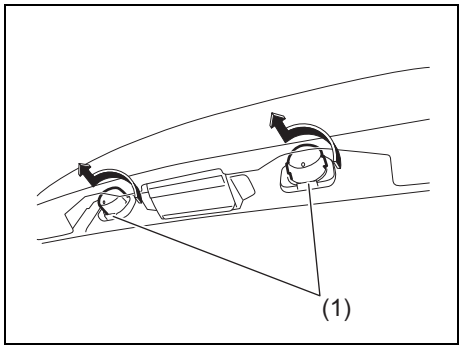

73R0211

1) Remove the cover (1) by turning it counterclockwise.

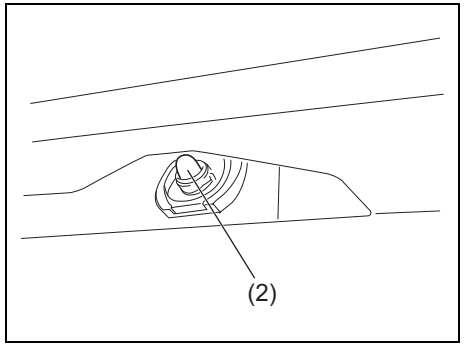

73R0192

2) To remove and install the bulb of the license plate light (2), simply pull out or push in the bulb.

High-mount Stop Light

LED is used. It is recommended that you take your vehicle to a SUZUKI dealer or a qualified workshop for bulb replacement since special procedures are required.

Interior Light

Front (Type A)

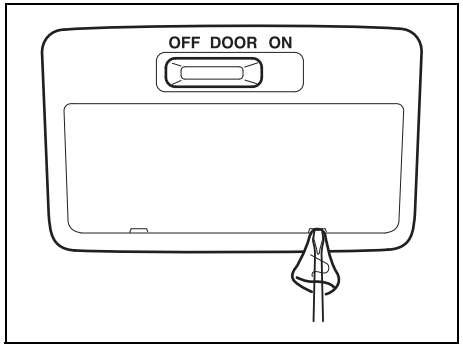

73R0193

Front (Type B)

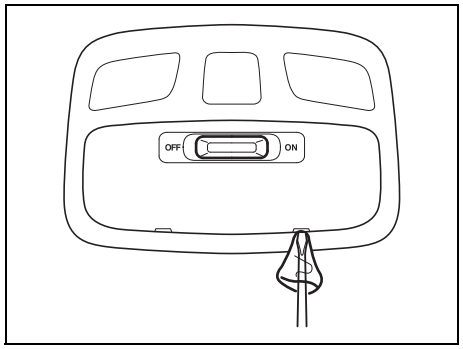

73R0212

Rear

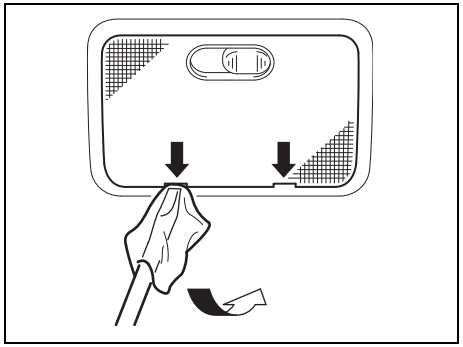

67LH084

1) Remove the lens by using a flat-bladed screwdriver covered with a soft cloth as shown. To install it, simply push it back in.
2) The bulb can be removed by simply pulling it out. When replacing the bulb, make sure that the contact springs are holding the bulb securely.
   The bulb can be removed by simply pushing it in the direction of the arrow and pulling it out.

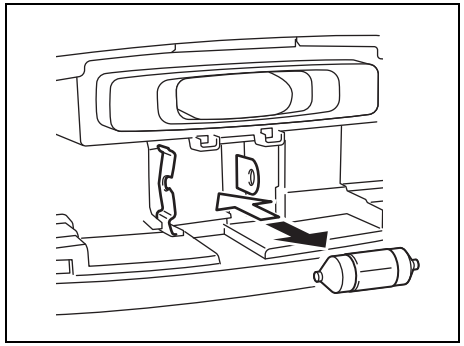

86T0006

Wiper Blades

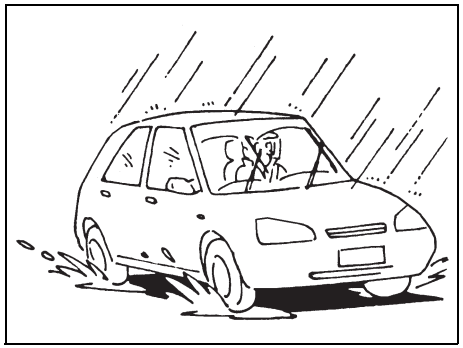

54G129

If the wiper blades become brittle or damaged, or make streaks when wiping, replace the wiper blades.

To install new wiper blades, follow the procedures below.

NOTICE
To avoid scratching or breaking the window, do not let the wiper arm strike the window while replacing the wiper blade.

NOTE:
Some wiper blades may be different from the ones described here depending on vehicle specifications. If so, consult a SUZUKI dealer or a qualified workshop for proper replacement method.

For windshield wipers:

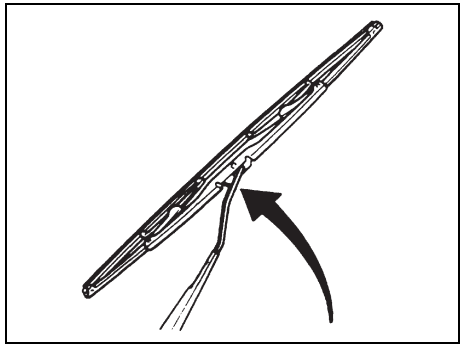

70G119

1) Hold the wiper arm away from the window.

NOTE:
When raising both of the front wiper arms, pull the driver's side wiper arm up first. When returning the wiper arms, lower the passenger's side wiper arm first. Otherwise, the wiper arms may interfere with each other.

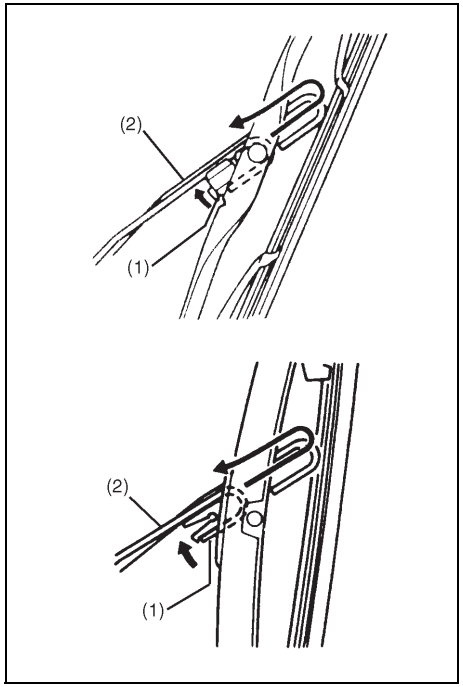

54G130

2) Squeeze lock (1) towards wiper arm (2) and remove the wiper frame from the arm as shown.
3) Unlock the lock end of the wiper blade and slide the blade out as shown.

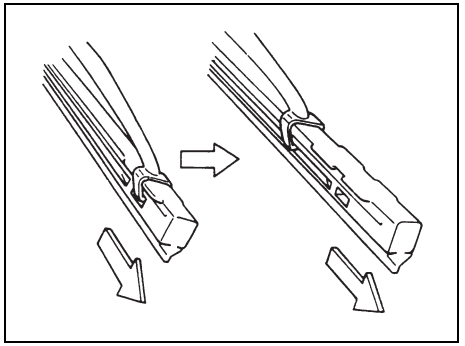

60A260

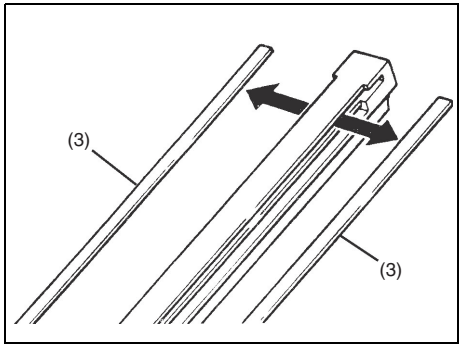

71LMT0708

(3) Retainer

4) If the new blade is provided without the two metal retainers (3), move them from the old blade to the new one.

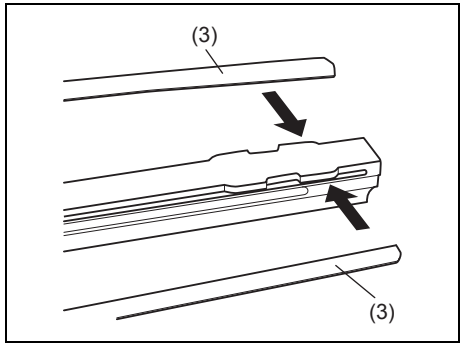

73R0194

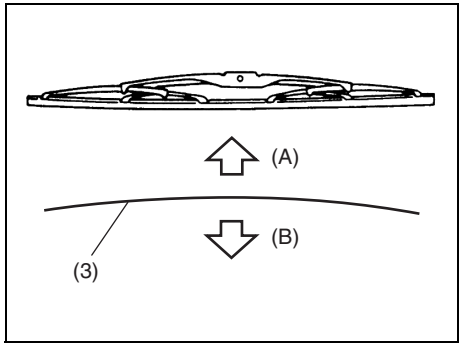

60MH072

(A) Up
(B) Down

NOTE:
When you install the metal retainers (3), make sure the direction of metal retainers as shown in the above illustrations.

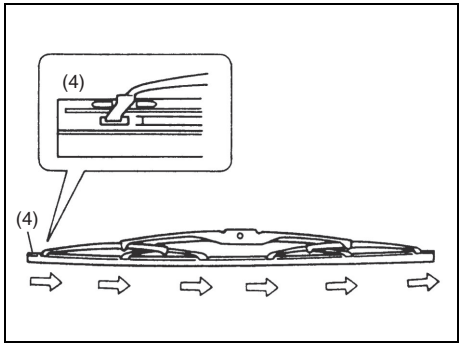

71LMT0707

(4) Locked end

5) Install the new blade in the reverse order of removal, with the locked end (4) positioned toward the wiper arm. Make sure the blade is properly retained by all the hooks. Lock the blade end into place.
6) Reinstall wiper frame to arm, making sure that the lock lever is snapped securely into the arm.

For rear wipers:

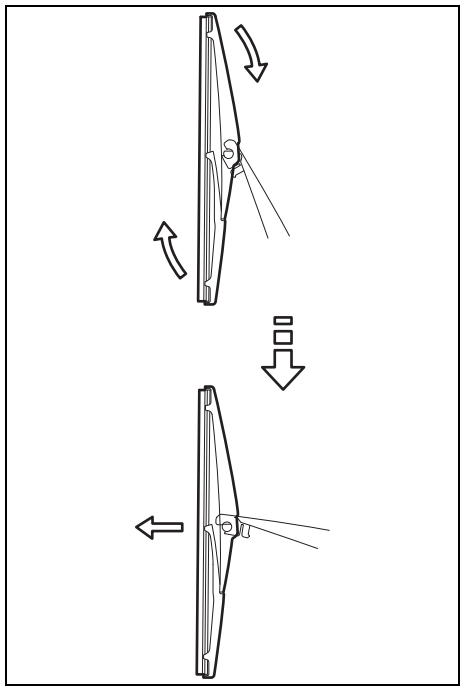

73R0200

1) Hold the wiper arm away from the window.
2) Remove the wiper frame from the wiper arm as shown.
3) Slide the blade out as shown.

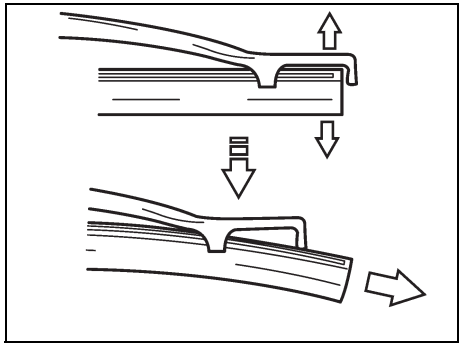

65D151

NOTE:
Do not flex the wiper blade frame end more than necessary. If you do, it can break off.

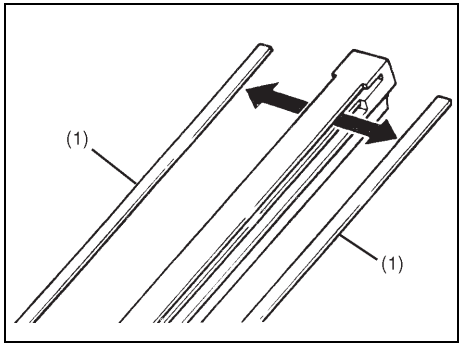

54G135

(1) Retainer

4) If the new blade is provided without the two metal retainers, move them from the old blade to the new one.
5) Install the new blade in the reverse order of removal.
   Make sure the blade is properly retained by all the hooks.
6) Reinstall wiper frame to arm in the reverse order of removal.

Windshield Washer Fluid

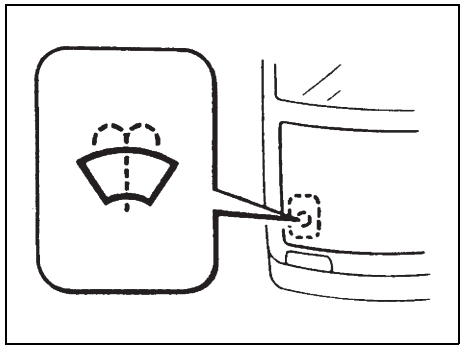

80JM078

Check that there is washer fluid in the tank. Refill it if necessary. Use a good quality windshield washer fluid, diluted with water as necessary.

⚠ WARNING

Do not use radiator antifreeze solution in the windshield washer reservoir. This can severely impair visibility when sprayed on the windshield, and also can damage your vehicle's paint.

NOTICE

Damage may result if the washer motor is operated with no fluid in the washer tank.

Air Conditioning System

If you do not use the air conditioner for a long period, such as during winter, it may not give the best performance when you start using it again. To help maintain optimum performance and durability of your air conditioner, it needs to be run periodically. Operate the air conditioner at least once a month for one minute with the engine idling. This circulates the refrigerant and oil and helps protect the internal components.

Air Conditioner Filter Replacement

Since special procedures are required, ask a SUZUKI dealer or a qualified workshop for this job.

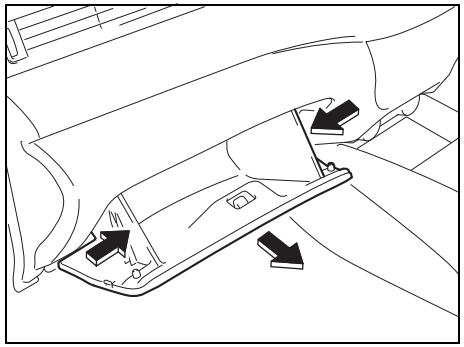

73R0201

1) To approach the air conditioner filter, remove the glove box by pressing both sides of the glove box inward and pulling it out.

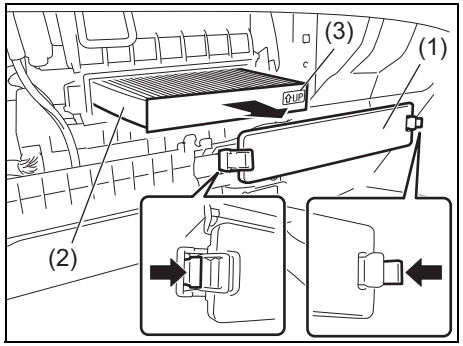

73R0202

2) Remove the cover (1) and pull out the air conditioner filter (2).

NOTE:
When you install a new filter, check that the UP mark (3) faces upward.

MEMO

EMERGENCY SERVICE

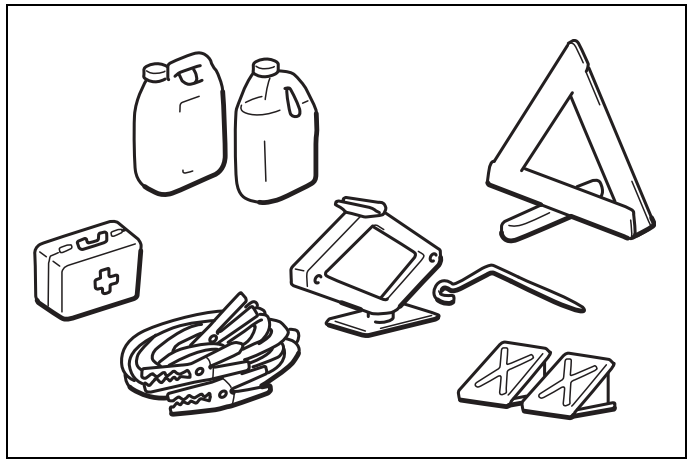

60G411

Tyre Changing Tool 7-1
Jacking Instructions 7-3
Jump-Starting Instructions 7-7
Towing Your Vehicle 7-8
Engine Trouble: Starter Does not Operate 7-9
Engine Trouble: Does not Start 7-10
Engine Trouble: Overheating 7-10

Tyre Changing Tool

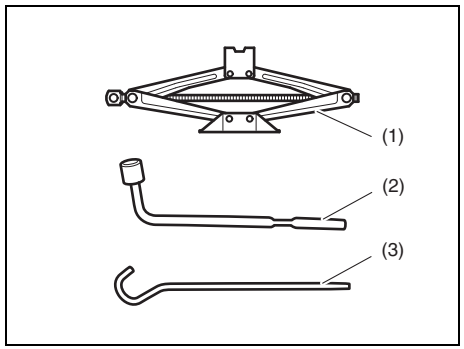

61MM0B100

(1) Jack
(2) Wheel wrench
(3) Jack handle

The tyre changing tools are stowed in the side of the luggage compartment. Remove the cover to access the tools.

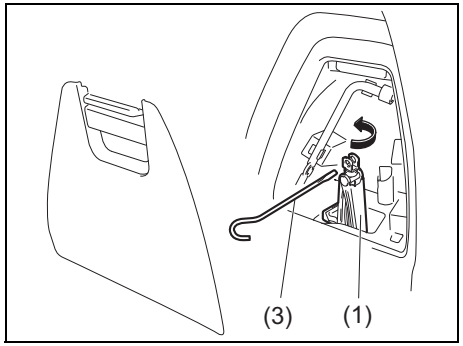

73R0126

To remove the jack (1), turn its shaft counterclockwise by using jack handle (3) and pull the jack out of the storage bracket.

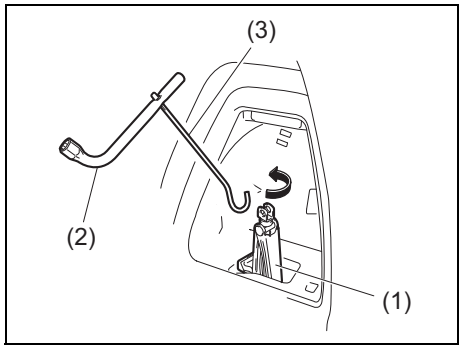

73R0203

NOTE:
If you are difficult to use the jack handle (3), use jack handle and wheel wrench (2) as shown in the illustration.

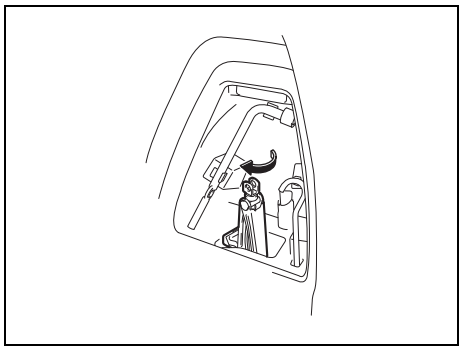

73R0205

To stow the jack, place it in the storage bracket and turn the shaft clockwise with hand.

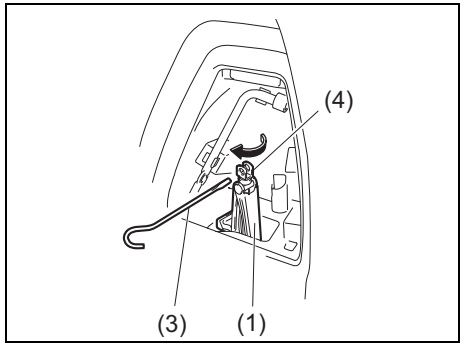

73R0206

After temporarily holding the jack (1) until it contacts the storage bracket, turn the shaft (4) approximately 90° to 180° by using jack handle (3) to securely hold the jack in place.

⚠ WARNING

After using the tyre changing tools, stow them securely or they can cause injury if an accident occurs.

⚠ CAUTION

The jack should be used only to change wheels. It is important to read the jacking instructions in this section before attempting to use the jack.

The spare tyre is stowed under the rear floor.

To remove the spare tyre:

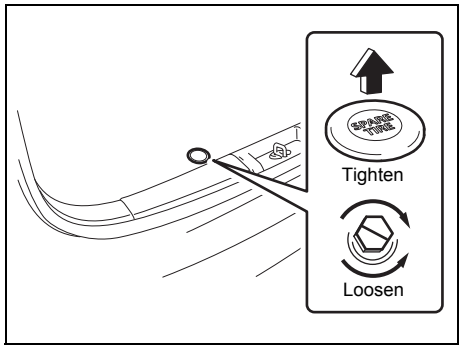

73R0127

1) Remove the cap and use a wheel wrench to loosen the hook bolt of the spare tyre holder. Then, rotate using the end of the jack handle.

NOTICE

Loose the spare tyre holder hook bolt until you can remove the hook by yourself. If the bolt is loosen too much, the hook might off and the spare tyre might drop off to the ground.

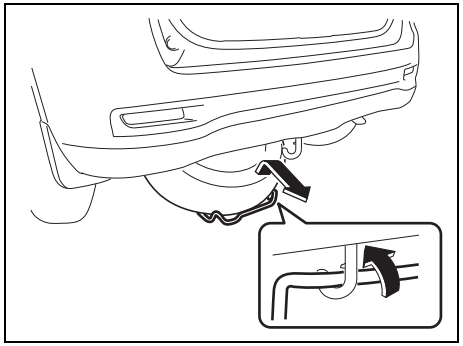
73R0128

2) Unhook the spare tyre holder and lower it slowly.
3) Remove the tyre.

To install the spare tyre:
1) Install the spare tyre facing up the outside of the wheel in the reverse order of removal.
2) Tighten the spare tyre holder hook bolt securely.

⚠ WARNING

Do not drive your vehicle with the loose spare tyre holder hook bolt, otherwise it may come loose or the spare tyre may drop off, which can result in an accident.

NOTICE

Tighten the spare tyre holder hook bolt securely. However, do not over-tighten the bolt, it may be warped or broken.

Tightening torque for the spare tyre holder hook bolt
30 Nm (3.0 kg-m, 22.1 lb-ft)

Jacking Instructions

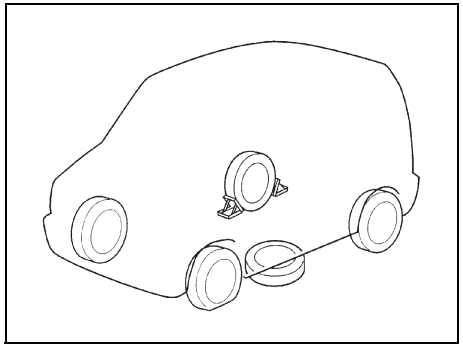

75F062

1) Place the vehicle on level, hard ground.
2) Set the parking brake firmly and shift into “P” (Park) if your vehicle has an automatic transmission, or shift into “R” (Reverse) if your vehicle has a manual transmission.

⚠ WARNING

- **Shift into “P” (Park) for an automatic transmission, or into “R” (Reverse) for a manual transmission vehicle when you jack up the vehicle.**
- **Never jack up the vehicle with the transmission in “N” (Neutral). Otherwise, unstable jack may cause an accident.**

3) Turn on the hazard warning switch if your vehicle is near traffic.
4) Block the front and rear of the wheel diagonally opposite of the wheel being lifted.
5) Place the spare tyre near the wheel being lifted as shown in the illustration in case the jack slips.

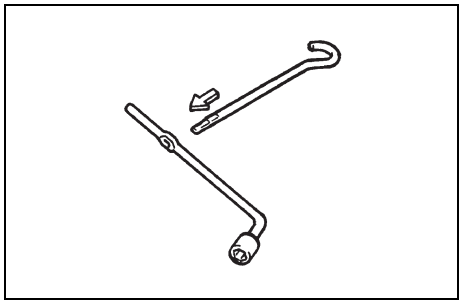

54G253

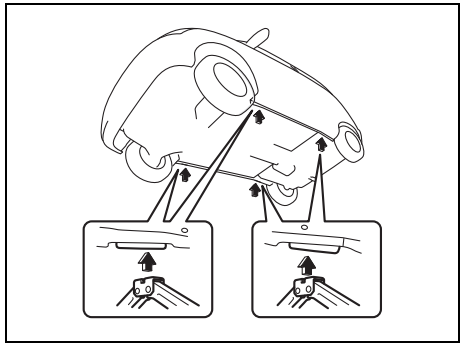

73R0190

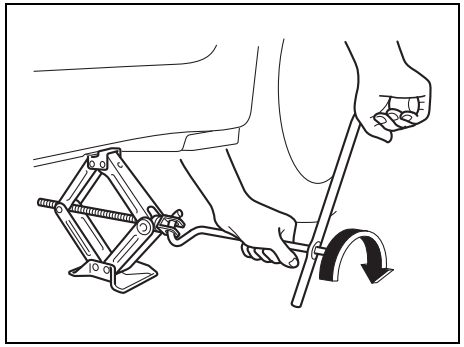

73R0191

6) Position the jack at an angle as shown in the illustration and raise the jack by turning the jack handle clockwise until the jack-head groove fits around the jacking bar beneath the vehicle body.

7) Continue to raise the jack slowly and smoothly until the tyre clears the ground. Do not raise the vehicle more than necessary.

⚠ WARNING

- **Use the jack only to change wheels on level, hard ground.**
- **Never jack up the vehicle on an inclined surface.**
- **Never raise the vehicle with the jack in a location other than the specified jacking point (shown in the illustration) near the wheel to be changed.**
  Especially, do not raise the vehicle with a jack at a part of the torsion beam which is located under the vehicle body, between rear wheels.
- **Make sure that the jack is raised at least 51 mm (2 inches) before it contacts the flange. Use of the jack when it is within 51 mm (2 inches) of being fully collapsed may result in failure of the jack.**
- **Never get under the vehicle when it is supported by the jack.**
- **Never run the engine when the vehicle is supported by the jack and never allow passengers to remain in the vehicle.**

Raising Vehicle with Garage Jack

- Apply the garage jack to one of the points indicated below.
- Always support the raised vehicle with jack stands (commercially available) at the points indicated below.

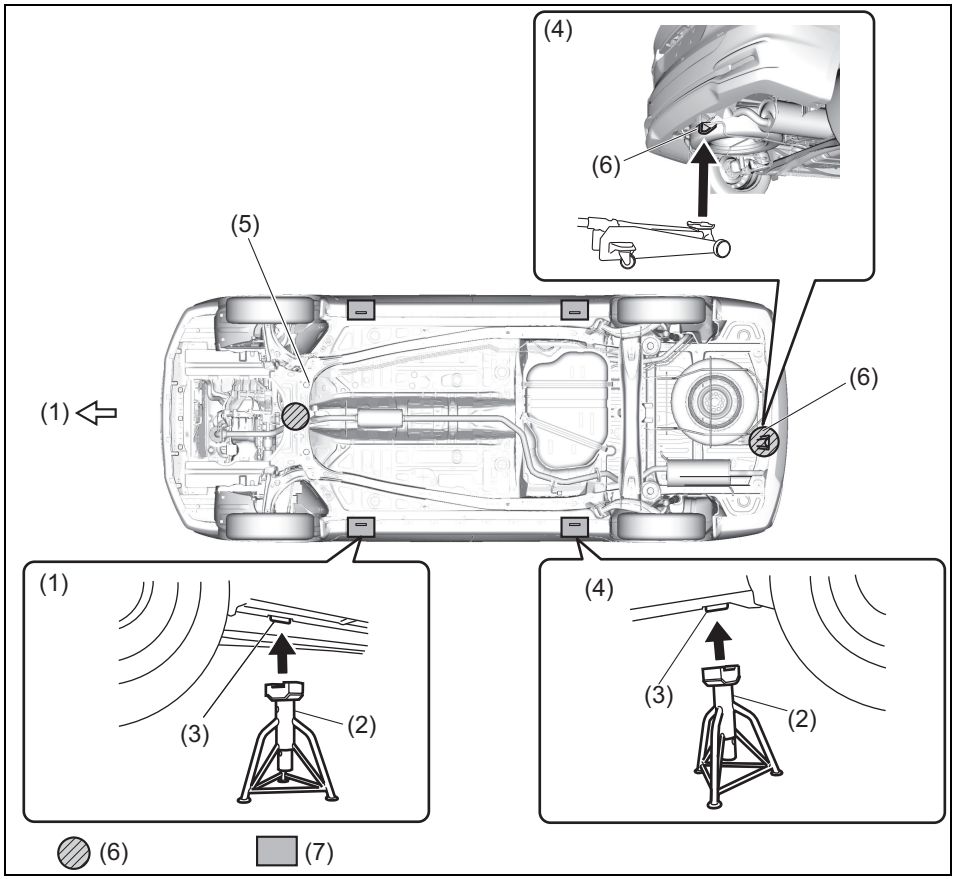

73R0129

(1) Front
(2) Jack stand
(3) Jacking point for onboard jack
(4) Rear
(5) Front suspension frame
(6) Jacking point for garage jack
(7) Application point for two-column lift and jack stand

NOTICE

- **Never apply a garage jack to the exhaust pipe or engine undercover and rear torsion beam.**
- **When you apply a garage jack to the rear jacking point, it may interfere with the rear bumper depending on the shape of the garage jack.**

NOTE:
For more details, please contact a SUZUKI dealer or a qualified workshop.

Changing Wheels

To change a wheel, use the following procedure:

1) Remove the jack, tools and spare wheel from the vehicle.
2) Loosen, but do not remove the wheel nuts.
3) Jack up the vehicle (follow the jacking instructions in this section).

⚠ WARNING

- **Shift into "P" (Park) for an automatic transmission, or into "R" (Reverse) for a manual transmission vehicle when you jack up the vehicle.**
- **Never jack up the vehicle with the transmission in "N" (Neutral). Otherwise, unstable jack may cause an accident.**

⚠ CAUTION

Immediately after the vehicle has been driven, the wheels, the wheel nuts and the area around the brakes might be extremely hot. Touching these areas may cause burn injury. Do not touch these areas, immediately after the vehicle has been driven.

4) Remove the wheel nuts and wheel.

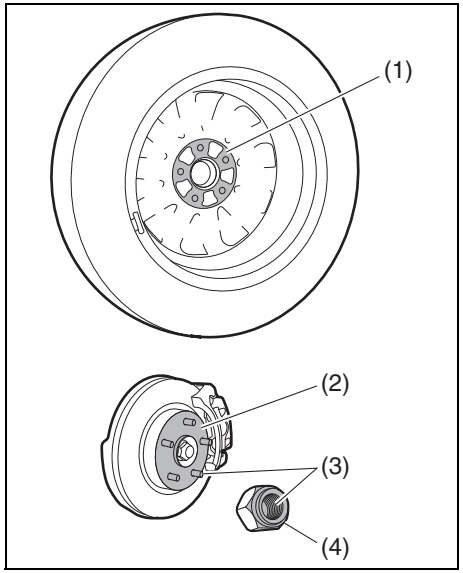

65J4033

5) Clean any mud or dirt off from the surface of the wheel (1), hub (2), thread part (3) and surface of the wheel nuts (4) with a clean cloth. Clean the hub carefully; it may be hot from driving.
6) Install the new wheel and replace the wheel nuts with their cone shaped end facing the wheel. Tighten each nut snugly by hand until the wheel is securely seated on the hub.

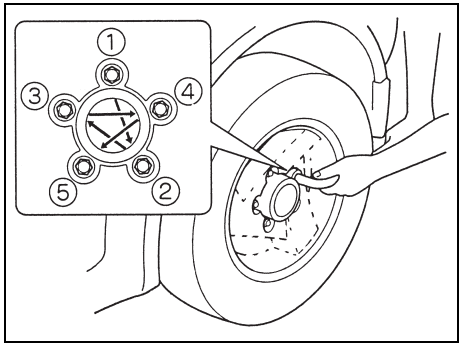

81A057

Tightening torque for wheel nuts
100 Nm (10.2 kg-m, 74.0 lb-ft)

7) Lower the jack and fully tighten the nuts with a wheel wrench in numerical order as shown in the illustration.

⚠ WARNING

Use genuine wheel nuts and tighten them to the specified torque as soon as possible after changing wheels. Incorrect wheel nuts or improperly tightened wheel nuts may come loose or fall off, which can result in an accident. If you do not have a torque wrench, have the wheel nut torque checked by a SUZUKI dealer or a qualified workshop.

After Changing Wheels
Stow the tyre changing tools (jack, jack handle and lug wrench) in place. Also, stow the flat tyre in the spare tyre stowed position. Refer to “Tyre Changing Tool” in this section.

NOTICE

Repair or replace the flat tyre immediately. If the flat tyre is placed in the spare tyre stowed position for long time, it can cause vehicle shakiness, noise, or scratches.

Jump-Starting Instructions

⚠ WARNING

- **Never attempt to jump-start your vehicle if the battery appears to be frozen. Batteries in this condition may explode.**
- **When making jump lead connections, be certain that your hands and the jump leads remain clear from pulleys, belts or fans.**
- **Batteries produce flammable hydrogen gas. Keep flames and sparks away from the battery or an explosion may occur. Never smoke when working near the battery.**
- **If the booster battery you use for jump-starting is installed in another vehicle, make sure the two vehicles are not touching each other.**
- **If your battery discharges repeatedly, for no apparent reason, have your vehicle inspected by a SUZUKI dealer or a qualified workshop.**
- **To avoid harm to yourself or damage to your vehicle or battery, follow the jump-starting instructions below.**
  If you are in doubt, call for qualified road service.

NOTICE

Your vehicle should not be started by pushing or towing. This starting method could result in permanent damage to the catalytic converter. Use jump leads to start a vehicle with a weak or flat battery.

Jump-Starting

1) Use only a 12-volt battery to jump-start your vehicle. Position the good 12-volt battery close to your vehicle so that the jump leads will reach both batteries. When using a battery installed on another vehicle, check that two vehicles do not touch each other. Set the parking brakes fully on both vehicles.
2) Turn off all vehicle accessories, except those necessary for safety reasons (for example, headlights or hazard lights).

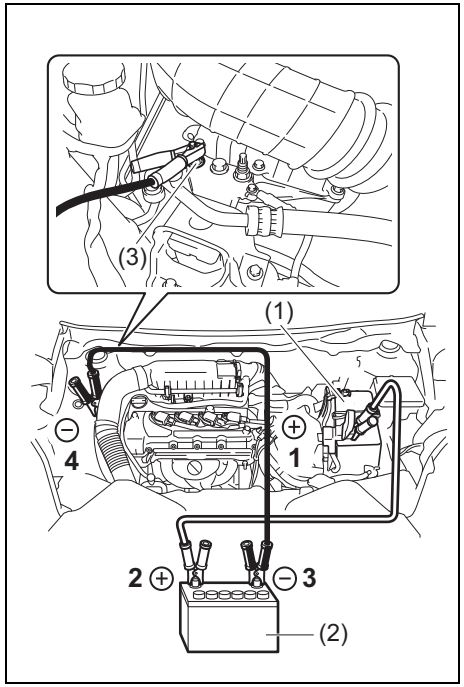

73R0199

3) Connect jump leads as follows:
   1. Connect one end of the first jump lead to the positive (+) terminal of the discharged battery (1).
   2. Connect the other end to the positive (+) terminal of the booster battery (2).
   3. Connect one end of the second jump lead to the negative (–) terminal of the booster battery (2).
   4. Make the final connection to an unpainted, heavy metal part (i.e.engine mount bolt (3)) of the engine of the vehicle with the discharged battery (1).

⚠ WARNING

Never connect the jump lead directly to the negative (–) terminal of the discharged battery, or an explosion may occur.

⚠ CAUTION

Connect the jump lead to the engine mount bolt securely. If the jump lead disconnects from the engine mount bolt because of vibration at the start of the engine, the jump lead could be caught in the drive belts.

4) If the booster battery you are using is fitted to another vehicle, start the engine of the vehicle with the booster battery. Run the engine at moderate speed.
5) Start the engine of the vehicle with the discharged battery.
6) Remove the jump leads in the exact reverse order in which you connected them.

Towing Your Vehicle

If you need to have your vehicle towed, contact a professional service. SUZUKI dealer or a qualified workshop can provide you with detailed towing instructions.

NOTICE

Observe the following instructions when towing your vehicle.
- **To help avoid damage to your vehicle during towing, proper equipment and towing procedures must be used.**
- **Using the frame hook, tow your vehicle on paved roads for short distances at low speed.**

2-Wheel Drive (2WD) Automatic Transmission

Automatic transmission vehicles may be towed using either of the following methods.

1) From the front, with the front wheels lifted and the rear wheels on the ground. Before towing, make sure that the parking brake is released.
2) From the rear, with the rear wheels lifted and a dolly under the front wheels.

NOTICE
Towing your vehicle with the front wheels on the ground can result in damage to the automatic transmission.

2-Wheel Drive (2WD) Manual Transmission

Manual transmission vehicles may be towed using either of the following methods.

1) From the front, with the front wheels lifted and the rear wheels on the ground. Before towing, make sure that the parking brake is released.
2) From the rear, with the rear wheels lifted and the front wheels on the ground, provided the steering and drivetrain are in operational condition. Before towing, make sure that transmission is in neutral, the steering wheel is unlocked (vehicle without keyless push start system - the ignition key should be in “ACC” position) (vehicle with keyless push start system - the ignition mode is “ACC”), and the steering wheel is secured with a clamping device designed for towing service.

NOTICE
The steering column is not strong enough to withstand shocks transmitted from the front wheels during towing. Always unlock the steering wheel before towing.

Engine Trouble: Starter Does not Operate

1) Try turning the ignition switch to “START” position or try pressing the engine switch to change the ignition mode to “START” with the headlights turned on to determine the battery condition. If the headlights go excessively dim or go off, it usually means that either the battery is discharged or the battery terminal contact is poor. Recharge the battery or correct battery terminal contact as necessary.
2) If the headlights remain bright, check the fuses. If the reason for failure of the starter is not obvious, there may be a major electrical problem. Have the vehicle inspected by a SUZUKI dealer or a qualified workshop.

Engine Trouble: Does not Start

Make sure that your vehicle has enough fuel and battery.
If the engine does not start under very cold condition, press the accelerator pedal all the way to the floor and hold it while cranking the engine.
Refer to “Starting engine (vehicle without keyless push start system) (if equipped)” or “Starting engine (vehicle with keyless push start system) (if equipped)” in operating your vehicle section.
If the engine still does not start have your vehicle inspected at a SUZUKI dealer or a qualified workshop.

- Do not operate the starter motor for more than 12 seconds.

(Vehicle with Keyless Push Start System)

NOTE:
If the engine refuses to start, the starter motor automatically stops after a certain period of time. After the starter motor has automatically stopped or if there is anything abnormal in the engine starting system, the starter motor runs only while the engine switch is held pressed.

Engine Trouble: Overheating

The engine could overheat temporarily under severe driving conditions. If the high engine coolant temperature warning light comes on as overheating or the engine coolant temperature gauge indicates overheating during driving:

1) Turn off the air conditioner.
2) Take the vehicle to a safe place and park.
3) Run the engine at a normal idle speed for a few minutes until the high engine coolant temperature warning light goes off or the indicator is within the normal, acceptable temperature range between “H” and “C”.

⚠ WARNING

If you see or hear escaping steam, stop the vehicle in a safe place and immediately turn off the engine to cool it. Do not open the hood when steam is present. When the steam can no longer be seen or heard, open the hood to see if the coolant is still boiling. If it is, you must wait until it stops boiling before you proceed.

Warning light does not go off or the temperature indication does not come down to within the normal, acceptable range:

1) Turn off the engine and check that the water pump belt and pulleys are not damaged or slipping. If any abnormality is found, correct it.
2) Check the coolant level in the reservoir. If it is found to be lower than “LOW” line, check radiator, water pump, radiator hoses and heater hoses for leakage. If leakage that may cause overheating is found, do not run the engine until these problems have been corrected.
3) If leakage is not found, carefully add coolant to the reservoir and then the radiator, if necessary. (Refer to “Engine coolant” in “INSPECTION AND MAINTENANCE” section.)

NOTE:
If engine overheats and you are not sure what to do, contact a SUZUKI dealer.



79J007

⚠ WARNING

- **It is hazardous to remove the radiator cap when the water temperature is high, because scalding fluid and steam may be blown out under pressure. The cap should only be taken off when the coolant temperature has lowered.**
- **To help prevent personal injury, keep hands, tools and clothing away from the engine cooling fan and air-conditioner fan (if equipped). These electric fans can automatically turn on without warning.**

APPEARANCE CARE

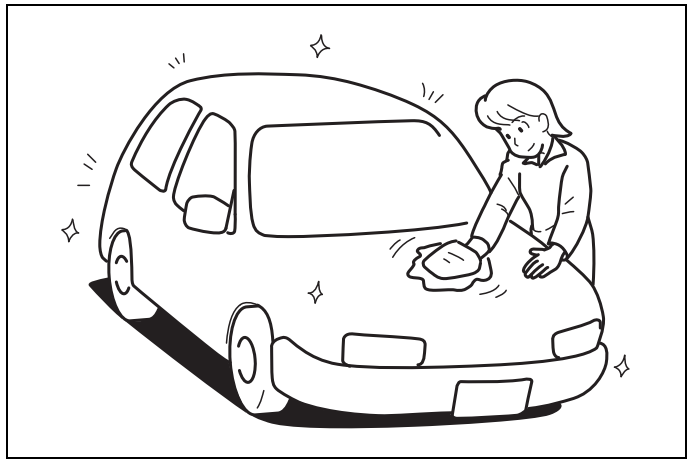

60G412

Corrosion Prevention 8-1
Vehicle Cleaning 8-2

Corrosion Prevention

It is important to take good care of your vehicle to protect it from corrosion. Listed below are instructions for how to maintain your vehicle to prevent corrosion. Please read and follow these instructions carefully.

Important Information about Corrosion

Common causes of corrosion

1) Accumulation of road salt, dirt, moisture, or chemicals in hard-to-reach areas of the vehicle underbody or frame.
2) Chipping, scratches and any damage to treated or painted metal surfaces resulting from minor accidents or abrasion by stones and gravel.

Environmental conditions which accelerate corrosion

1) Road salt, dust control chemicals, sea breeze or industrial pollution will all accelerate the corrosion of metal.
2) High humidity will increase the rate of corrosion particularly when the temperature range is just above the freezing point.
3) Moisture in certain areas of a vehicle for an extended period of time may promote corrosion even though other body sections may be completely dry.
4) High temperatures will cause an accelerated rate of corrosion to parts of the vehicle which are not well-ventilated to permit quick drying.

This information illustrates the necessity of keeping your vehicle (particularly the underbody) as clean and dry as possible. It is equally important to repair any damage to the paint or protective coatings as soon as possible.

How to Help Prevent Corrosion

Wash your vehicle frequently

The best way to preserve the finish on your vehicle and to help avoid corrosion is to keep it clean with frequent washing.
Wash your vehicle at least once during the winter and once immediately after the winter. Keep your vehicle, particularly the underside, as clean and dry as possible.
If you frequently drive on salted roads, your vehicle should be washed at least once a month during the winter. If you live near the ocean, your vehicle should be washed at least once a month throughout the year.

For washing instructions, refer to “Vehicle Cleaning” section.

Remove foreign material deposits

Foreign material such as salts, chemicals, road oil or tar, tree sap, bird droppings and industrial fall-out may damage the finish of your vehicle if it is left on painted surfaces. Remove these types of deposits as quickly as possible. If these deposits are difficult to wash off, an additional cleaner may be required. Be sure that any cleaner you use is not harmful to painted surfaces and is specifically intended for your purposes. Follow the manufacturer’s directions when using these special cleaners.

Repair finish damage
Carefully examine your vehicle for damage to the painted surfaces. Should you find any chips or scratches in the paint, touch them up immediately to prevent corrosion from starting. If the chips or scratches have gone through to the bare metal, have a qualified body shop make the repair.

Keep passenger and luggage compartments clean
Moisture, dirt or mud can accumulate under the floor mats and may cause corrosion. Occasionally, check under these mats to ensure that this area is clean and dry. More frequent checks are necessary if the vehicle is used for off-road driving or in wet weather.
Certain cargos such as chemicals, fertilizers, cleaners, salts, etc. are extremely corrosive by nature. These products should be transported in sealed containers. If they are spilled or leaked, clean and dry the area immediately.

Park your vehicle in a dry, well-ventilated area
Do not park your vehicle in a damp, poorly ventilated area. If you often wash your vehicle in the garage and place it there in wet condition, your garage may be damp. The high humidity in the garage may cause or accelerate corrosion. A wet vehicle may corrode even in a heated garage if the ventilation is poor.

⚠ WARNING

Do not apply additional undercoating or rust preventive coating on or around exhaust system components such as the catalytic converter, exhaust pipes, etc. A fire could be started if the undercoating substance becomes overheated.

Vehicle Cleaning

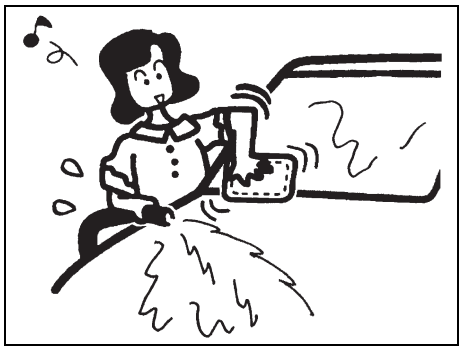

76G044S

⚠ WARNING

When cleaning the interior or exterior of the vehicle, do not use flammable solvents such as lacquer thinners, gasoline and benzene. Also, do not use cleaning materials such as bleaches and strong household detergents. The materials could cause personal injury or damage to the vehicle.

Cleaning Interior

⚠ WARNING

- **Do not spray the interior with water or other liquids. If the navigation equipment, audio components, switches, wiring under the floor, or other electrical parts become wet, there is a risk of fire or malfunction, and the SRS airbag system could fail to function normally.**
- **If you splash water or spill your drink in the car, have it inspected immediately at the SUZUKI dealer or a qualified.**

Leather upholstery
Remove loose dirt with a vacuum cleaner. Using a mild soap or saddle soap solution, wipe dirt off with a clean damp soft cloth. To remove soap, wipe the areas again with a soft cloth dampened with water. Wipe the areas dry with a soft dry cloth. Repeat this until the dirt or stain is removed, or use a commercial leather cleaner for tougher dirt or stains. If you use a leather cleaner, carefully follow the manufacturer's instructions and precautions. Do not use solvent type cleaners or abrasive cleaners.

NOTE:
- *In order to keep leather upholstery looking good, it should be cleaned at least twice a year.*
- *If leather upholstery becomes wet, immediately wipe it dry with tissue paper or a soft cloth. Water may cause leather to harden and shrink if it is not wiped off.*
- *When parking on sunny days, select a shady place or use a sunshade. If leather upholstery is exposed to direct sunlight for a long time, it may discolor and shrink.*
- *As is common with natural materials, leather is inherently irregular in grain and cowhide has spots in its natural state. These do not affect the performance of the leather in any way.*

Vinyl upholstery
Prepare a solution of soap or mild detergent mixed with warm water. Apply the solution to the vinyl with a sponge or soft cloth and let it soak for a few minutes to loosen dirt.
Rub the surface with a clean, damp cloth to remove dirt and the soap solution. If some dirt still remains on the surface, repeat this procedure.

Fabric upholstery
Remove loose dirt with a vacuum cleaner. Using a mild soap solution, rub stained areas with a clean damp cloth. To remove soap, rub the areas again with a cloth dampened with water. Repeat this until the stain is removed, or use a commercial fabric cleaner for tougher stains. If you use a fabric cleaner, carefully follow the manufacturer's instructions and precautions.

Seat belts
Clean seat belts with a mild soap and water. Do not use bleach or dye on the belts. They may weaken the fabric in the belts.

Vinyl floor mats
Ordinary dirt can be removed from vinyl with water or mild soap. Use a brush to help loosen dirt. After the dirt is loosened, rinse the mat thoroughly with water and dry it in the shade.

Carpets
Remove dirt and soil as much as possible with a vacuum cleaner. Using a mild soap solution, rub stained areas with a clean damp cloth. To remove soap, rub the areas again with a cloth dampened with water. Repeat this until the stain is removed, or use a commercial carpet cleaner for tougher stains. If you use a carpet cleaner, carefully follow the manufacturer's instructions and precautions.

Instrument panel and console
Remove loose dirt with a vacuum cleaner. Gently wipe dirt off with a tightly squeezed damp clean cloth. Repeat this until the dirt is removed.

NOTICE

Do not use chemical products that contain silicon to wipe electrical components such as the air conditioning system, audio, navigation system, or other switches. These will cause damage to the components.

NOTICE

- **Liquid such as liquid aromatics, soft drinks or juice may cause discoloration, wrinkles, and cracking to resin-based parts and textiles. Immediately wipe it dry with tissue paper or a soft cloth.**
- **Do not leave leather products with color, fur or vinyl products, etc. in your vehicle for long periods. It may cause discoloration or deterioration of interior.**

Cleaning Exterior

NOTICE

It is important that your vehicle be kept clean and free from dirt. Failure to keep your vehicle clean may result in fading of the paint or corrosion to various parts of the vehicle body.

Caring for Aluminum Wheels

NOTE:

- *Do not use an acidic or alkaline detergent, or a cleaner containing petroleum solvent to wash aluminum wheels. These types of cleaner will cause permanent spots, discoloration and cracks on finished surfaces and damage to center caps.*
- *Do not use a bristle brush and soap containing an abrasive material. These will damage finished surfaces.*

Washing

⚠ WARNING

- **Never attempt to wash and wax your vehicle with the engine running.**
- **When cleaning the underside of the body and fender, where there may be sharp-edged parts, wear gloves and a long-sleeved shirt to protect your hands and arms from being cut.**
- **After washing your vehicle, carefully test the brakes before driving to make sure they have maintained their normal effectiveness.**

Washing by hand

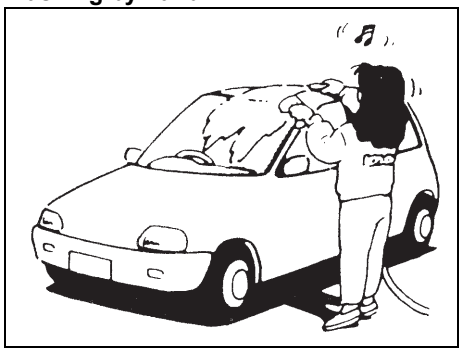

60B212S

When washing the vehicle, park it in the place where direct sunlight does not fall on it as much as possible and follow the instructions below:

1) Flush the underside of body and wheel housings with pressurized water to remove mud and debris. Use plenty of water.

NOTICE

When washing the vehicle:
- **Avoid directing steam or hot water of more than 80°C (176°F) on plastic parts.**
- **To avoid damaging engine components, do not use pressurized water in the engine compartment.**

2) Rinse the body to loosen the dirt. Remove dirt and mud from the body exterior with running water. You may use a soft sponge or brush. Do not use hard materials which can scratch the paint or plastic. Remember that the headlight covers or lenses are made of plastic in many cases.

NOTICE

To avoid damage to the paint or plastic surface, do not wipe the dirt off without ample water. Follow the above procedure.

3) Wash the entire exterior with a mild detergent or car wash soap using a sponge or soft cloth. The sponge or cloth should be frequently soaked in the soap solution.

NOTICE

When using a commercial car wash product, observe the cautions specified by the manufacturer. Never use strong household detergents or soaps.

4) Once the dirt has been completely removed, rinse off the detergent with running water.
5) Wipe off the vehicle body with a wet chamois or cloth and allow it to dry in the shade.
6) Check carefully for damage to painted surfaces. If there is any damage, touch up the damage following the procedure below:
   1. Clean all damaged spots and allow them to dry.
   2. Stir the paint and touch up the damaged spots lightly using a small brush.
   3. Allow the paint to dry completely.

Washing by an automatic car wash

NOTICE

If you use an automatic car wash, make sure that your vehicle's body parts, such as an antenna, cannot be damaged. If you are in doubt, consult the car wash operator for advice.

Washing by a high-pressure cleaner

NOTICE

If you use a high-pressure cleaner, keep away the nozzle from your vehicle sufficiently.
- **Bringing the nozzle to your vehicle too close or pointing the nozzle to the opening of front grill or bumper etc. can cause damage and malfunction of the vehicle body and parts.**
- **Pointing the nozzle to door glasses and door frames can allow water to enter the cabin.**

Waxing

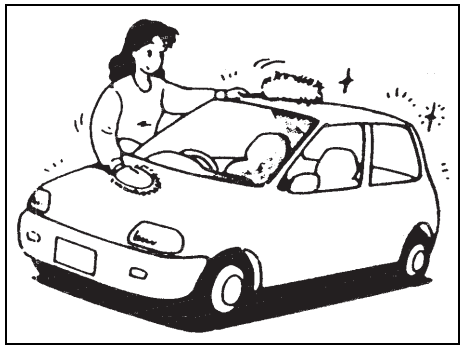

60B211S

After washing the vehicle, waxing and polishing are recommended to further protect and beautify the paint.

- Only use waxes and polishes of good quality.
- When using waxes and polishes, observe the precautions specified by the manufacturers.

MEMO

SPECIFICATIONS

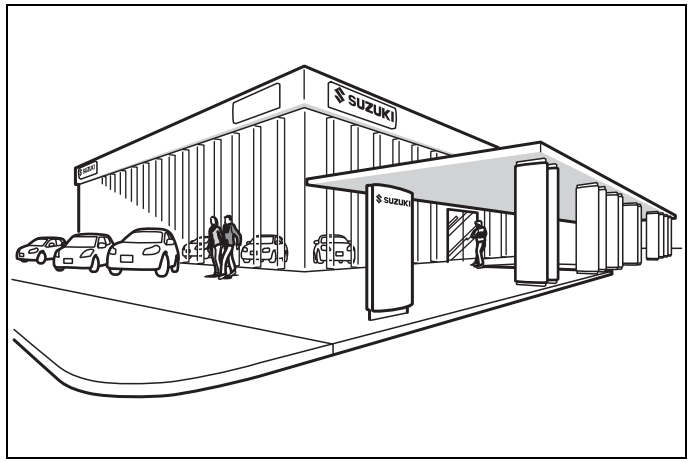

81MM01001

Vehicle Identification **9-1**
Fuel **9-2**
Specifications **9-3**

Vehicle Identification

Chassis Serial Number

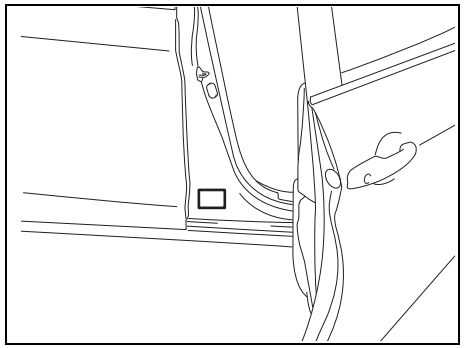

73R0135

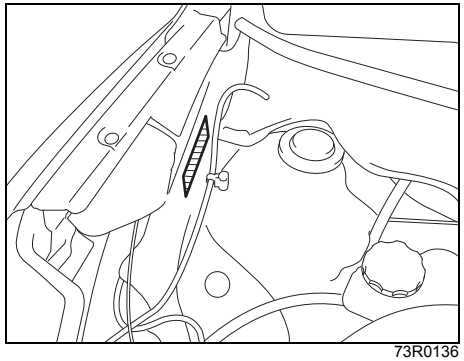

73R0136

The chassis and/or engine serial numbers are used to register the vehicle. They are also used to assist a SUZUKI dealer or a qualified workshop when ordering or referring to special service information. Whenever you have occasion to consult a SUZUKI dealer or a qualified workshop, remember to identify your vehicle with this number. Should you find the number difficult to read, you will also find it on the identification plate.

Engine Serial Number

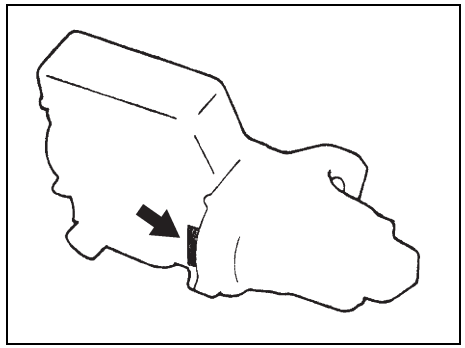

60G128

The engine serial number is stamped on the cylinder block as shown in the illustration.

NOTE:
For the Vehicle Identification of Mexico models, refer to "For Mexico" in the "SUPPLEMENT" section.

Fuel

Gasoline Engine

To avoid damaging catalytic converter, you must use unleaded gasoline with an octane number (RON) of 90 or higher.
This is identified by a label attached on fuel lid that states: “UNLEADED FUEL ONLY”, “NUR UNVERBLEITES BENZIN”, “ENDAST BLYFRI BENSIN”, “SOLO GASOLINA SIN PLOMO” or “KHUSUS BENSIN TANPA TIMBAL”.

Gasoline/Ethanol blends
Blends of unleaded gasoline and ethanol (grain alcohol), also known as gasohol, are commercially available in certain areas. Blends of this type may be used in your vehicle if they are no more than 10% ethanol. Make sure this gasoline-ethanol blend has octane ratings no lower than those recommended for the gasoline.

NOTE:
If you are not satisfied with the driveability or fuel economy of your vehicle when you use a gasoline/alcohol blend, you should switch back to unleaded gasoline containing no alcohol.

Gasoline containing MTBE
Unleaded gasoline containing MTBE (methyl tertiary butyl ether) may be used in your vehicle if the MTBE content is not greater than 15%. This oxygenated fuel does not contain alcohol.

NOTICE

The fuel tank has an air space to allow for fuel expansion in hot weather. If you continue to add fuel after the filler nozzle has automatically shut off or an initial blowback occurs, the air chamber will become full. Exposure to heat when fully fuelled in this manner will result in leakage due to fuel expansion. To prevent such fuel leakage, stop filling after the filler nozzle has automatically shut off, or when initial vent blowback occurs, if using an alternative non-automatic system.

NOTICE

Be careful not to spill fuel containing alcohol while refueling. If fuel is spilled on the vehicle body, wipe it up immediately. Fuels containing alcohol can cause paint damage, which is not covered under the New Vehicle Limited Warranty.

NOTE:
- *For the Fuel Recommendation of Mexico models, refer to “For Mexico” in the “SUPPLEMENT” section.*
- *For the Fuel Recommendation of Chile models, refer to “For Chile” in the “SUPPLEMENT” section.*
- *For the Fuel Recommendation of Thailand models, refer to “For Thailand” in the “SUPPLEMENT” section.*

Specifications

NOTE:
Specifications are subject to change without notice.
M/T: Manual Transmission A/T: Automatic Transmission

ITEM: Dimensions	UNIT: mm (in.)		
Overall length			4395 (173.0)
Overall width			1735 (68.3)
Overall height	With roof rails		1700 (66.9)
	Without roof rails		1690 (66.5)
Wheelbase			2740 (107.9)
Track		Front	1510 (59.4)
		Rear	1520 (59.8)
Ground clearance			180 (7.1)

ITEM: Mass (weight)	UNIT: kg (lbs)		
Curb mass (weight)	M/T		1110 (2447) – 1160 (2557)
	A/T		1130 (2491) – 1170 (2579)
Gross vehicle mass (weight) rating	M/T		1715 (3780)
	A/T		1730 (3814)
Permissible maximum Axle Weight	M/T	Front	805 (1774)
		Rear	1030 (2270)
	A/T	Front	805 (1774)
		Rear	1030 (2270)

ITEM: Engine	
Type	K15B (DOHC)
Number of cylinders	4
Bore	74.0 mm (2.91 in.)
Stroke	85.0 mm (3.34 in.)
Piston displacement	1462 cm^3 (1462 cc, 89.2 cu.in)
Compression ratio	10.5 : 1

ITEM: Electrical	
Standard spark plug	NGK KR6A-10
Lead-acid battery	N55, 42AH/20HR, CCA 480A (JIS)*1
Lithium-ion battery	Maintenance free*2
Fuses	See “INSPECTION AND MAINTENANCE” section.

*1 Your vehicle is equipped with a lead-acid battery for exclusive use of the ENG A-STOP system. When replacing the lead-acid battery, make sure to select the specified type for ENG A-STOP system. Consult an authorized SUZUKI dealer for replacing the lead-acid battery.

*2 If the lithium-ion battery or high voltage battery is completely discharged, the battery cannot be recharged. When replacing or disposing the lithium-ion battery or high voltage battery, consult an authorized SUZUKI dealer.

ITEM: Lights		WATTAGE	BULB No.
Headlight	High beam	12V 60W	HB3
	Low beam	12V 55W	H11
Turn signal light	Front	12V 21W	WY21W
	Rear	12V 21W	PY21W
Side turn signal light (on fender)*		12V 5W	–
Side turn signal light (on outside rearview mirror)*		LED	–
Position light		12V 5W	W5W
Tail/stop light*		LED	–
License plate light		12V 5W	W5W
Reversing light		12V 16W	W16W
Interior light		12V 10W	–
Front fog light (if equipped)		12V 19W	H16
High mount stop light*		LED	–

- If you need to replace the following bulbs indicated in the above table, consult your SUZUKI dealer.

* Since the lights are non-disassemble type, you cannot replace a bulb. Replace the target assembly if any bulb is defective.

ITEM: Wheels and Tyres	
Tyre size, front and rear	185/65R15 88H*1
Rim size	15X5 1/2J
Tyre pressures	For the specified tyre pressure, see the Tyre Information Label located on the driver's door lock pillar.

*1 If you cannot prepare tyres with the specified load index rate and speed symbol, prepare tyres with higher load index rate and speed symbol.

ITEM: Capacities (approx.)				
Coolant (including reservoir tank)	Without Heating and Air Conditioning System	M/T	See "INSPECTION AND MAINTENANCE" section.	3.7 L (6.5 Imp pt)
		A/T		3.6 L (6.3 Imp pt)
	With Heating and Air Conditioning System	M/T		4.1 L (7.2 Imp pt)
		A/T		4.0 L (7.0 Imp pt)
Fuel tank			See "FUEL" in this section.	45 L (9.9 Imp gal)
Engine oil			Classification: API SL, SM, SN or SP ILSAC GF-6 Viscosity: SAE 0W-20	3.1 L (5.5 Imp pt) (replacement with oil filter)
Transmission oil		M/T	"SUZUKI GEAR OIL 75W"	2.6 L (4.5 Imp pt)
		A/T	"SUZUKI ATF AW-1"	5.0 L (8.8 Imp pt)
Windshield washer fluid			–	2.0 L (0.4 Imp gal)

MEMO

SUPPLEMENT

For Mexico 10-1
For Chile 10-3
For Thailand 10-4

For Mexico

Fuel

Your vehicle requires regular unleaded gasoline with a minimum rating of 87 pump octane ((R + M)/2 method). In some areas, the only fuels that are available are oxygenated fuels.

Oxygenated fuels which meet the minimum octane requirement and the requirements described below may be used in your vehicle without jeopardizing the New Vehicle Limited Warranty.

NOTE:
Oxygenated fuels are fuels which contain oxygen-carrying additives such as MTBE or alcohol.

Gasoline-ethanol blends
Blends of unleaded gasoline and ethanol (grain alcohol), also known as gasohol, may be used in your vehicle if the ethanol content is not greater than 10%.

Fuel Pump Labeling

In some states, pumps that dispense oxygenated fuels are required to be labeled for the type and percentage of oxygenate and whether important additives are present. Such labels may provide enough information for you to determine if a particular blend of fuel meets the requirements listed above. In other areas, pumps may not be clearly labeled as to the content or type of oxygenate and additives. If you are not sure that the fuel you intend to use meets these requirements, check with the service station operator or the fuel supplier.

NOTE:
To help clean the air, SUZUKI recommends you use the oxygenated fuels. However, if you are not satisfied with the driveability or fuel economy of your vehicle when you are using an oxygenated fuel, switch back to the regular unleaded gasoline.

NOTICE

Be careful not to spill fuel containing alcohol while refueling. If fuel is spilled on the vehicle body, wipe it up immediately. Fuels containing alcohol can cause paint damage, which is not covered under the New Vehicle Limited Warranty.

Tyre Rotation

5-tyre rotation

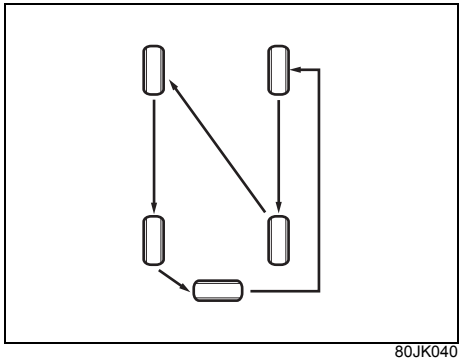

80JK040

4-tyre rotation

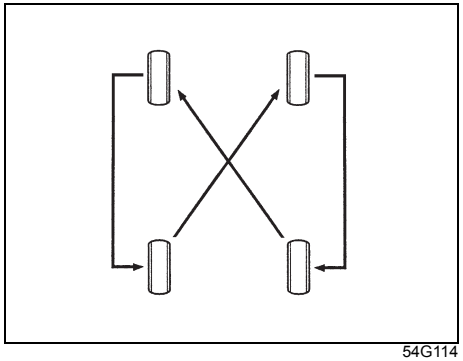

54G114

To avoid uneven wear of your tyres and to prolong their life, rotate the tyres as illustrated. Tyres should be rotated as recommended in the periodic maintenance schedule. After rotation, adjust front and rear tyre pressures to the specification listed on your vehicle's Tyre Information Label.

Vehicle Identification

Chassis Serial Number

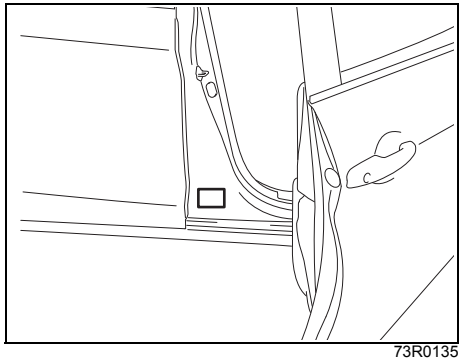

73R0135

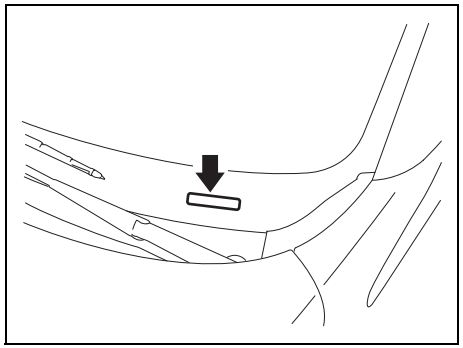

73RS005

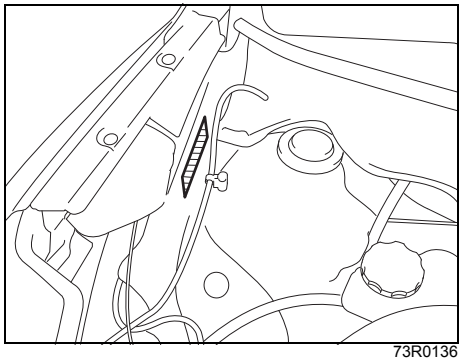

73R0136

The chassis and/or engine serial numbers are used to register the vehicle. They are also used to assist a SUZUKI dealer or a qualified workshop when ordering or referring to special service information. Whenever you have occasion to consult a SUZUKI dealer or a qualified workshop, remember to identify your vehicle with this number. Should you find the number difficult to read, you will also find it on the identification plate.

Engine Serial Number

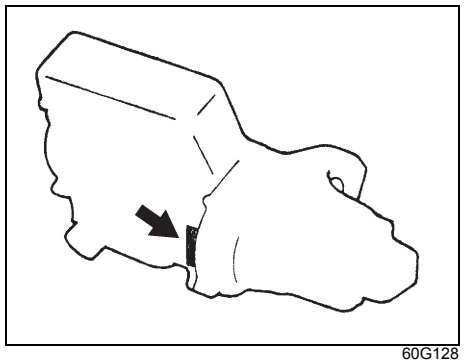

60G128

The engine serial number is stamped on the cylinder block as shown in the illustration.

For Chile

Fuel

To avoid damaging catalytic converter, you must use unleaded gasoline with an octane number (RON) of 90 or higher.
This is identified by a label attached on fuel lid that states: “UNLEADED FUEL ONLY”, “NUR UNVERBLEITES BENZIN”, “ENDAST BLYFRI BENSIN”, “SOLO GASOLINA SIN PLOMO” or “KHUSUS BENSIN TANPA TIMBAL”.

Gasoline-ethanol blends
Blends of unleaded gasoline and ethanol (grain alcohol), also known as gasohol, are commercially available in certain areas. Blends of this type may be used in your vehicle if they are no more than 10% ethanol. Make sure this gasoline-ethanol blend has octane ratings no lower than those recommended for the gasoline.

NOTE:
If you are not satisfied with the driveability or fuel economy of your vehicle when you use a gasoline-alcohol blend, you should switch back to unleaded gasoline containing no alcohol.

NOTICE

The fuel tank has an air space to allow for fuel expansion in hot weather. If you continue to add fuel after the filler nozzle has automatically shut off or an initial blowback occurs, the air chamber will become full. Exposure to heat when fully fuelled in this manner will result in leakage due to fuel expansion. To prevent such fuel leakage, stop filling after the filler nozzle has automatically shut off, or when initial vent blowback occurs, if using an alternative non-automatic system.

NOTICE

Be careful not to spill fuel containing alcohol while refueling. If fuel is spilled on the vehicle body, wipe it up immediately. Fuels containing alcohol can cause paint damage, which is not covered under the New Vehicle Limited Warranty.

For Thailand

Fuel

To avoid damaging catalytic converter, you must use unleaded gasoline with an octane number (RON) of 90 or higher.
This is identified by a label attached on fuel lid that states: “UNLEADED FUEL ONLY”, “NUR UNVERBLEITES BENZIN”, “ENDAST BLYFRI BENSIN”, “SOLO GASOLINA SIN PLOMO” or “KHUSUS BENSIN TANPA TIMBAL”.

Gasoline/Ethanol blends
Blends of unleaded gasoline and ethanol (grain alcohol), also known as gasohol, are commercially available in certain areas. Blends of this type may be used in your vehicle if they are no more than 20% ethanol.
Make sure this gasoline-ethanol blend has octane ratings no lower than those recommended for the gasoline.

NOTE:
If you are not satisfied with the driveability or fuel economy of your vehicle when you use a gasoline/alcohol blend, you should switch back to unleaded gasoline containing no alcohol.

Gasoline containing MTBE
Unleaded gasoline containing MTBE (methyl tertiary butyl ether) may be used in your vehicle if the MTBE content is not greater than 15%. This oxygenated fuel does not contain alcohol.

NOTICE

The fuel tank has an air space to allow for fuel expansion in hot weather. If you continue to add fuel after the filler nozzle has automatically shut off or an initial blowback occurs, the air chamber will become full. Exposure to heat when fully fuelled in this manner will result in leakage due to fuel expansion. To prevent such fuel leakage, stop filling after the filler nozzle has automatically shut off, or when initial vent blowback occurs, if using an alternative non-automatic system.

NOTICE

Be careful not to spill fuel containing alcohol while refueling. If fuel is spilled on the vehicle body, wipe it up immediately. Fuels containing alcohol can cause paint damage, which is not covered under the New Vehicle Limited Warranty.

MEMO

INDEX

Symbols

"PUSH" Indicator Light 2-59
"RE-GEN" Indicator Light 2-59
"Remote Controller Outside" Warning 3-9
"SET" indicator light 2-61

Numerics

1-driving cycle average fuel consumption (Information Display) 2-33
2-Wheel Drive (2WD) Automatic Transmission 7-9
2-Wheel Drive (2WD) Manual Transmission 7-9
4-Speed Automatic Transmission 3-20
5-minute average fuel consumption (Information Display) 2-33

A

ABS Warning Light / Brake System Warning Light 3-53
Accelerator and brake (Information Display) 2-36
Accelerator Pedal 3-13
Accessory Socket 5-62
Actuation Conditions for ENG A-STOP System 3-32
Adding Coolant 6-18
Adjusting Seat Height 1-2
Adjusting Seat Position (for 2nd Row Seats) 1-4
Adjusting Seat Position (Front Seats) 1-2
Adjusting Seatbacks 1-2, 1-4
Air Cleaner 6-19
Air Conditioner Filter Replacement 6-48
Air Conditioning System 6-47
AIRBAG Light 2-55
Airbags 1-31
Anti-Lock Brake System (ABS) 3-48, 3-51
Anti-Lock Brake System (ABS) Warning Light 2-53
Anti-Theft Feature (Audio System) 5-50
Assist Grips 5-63
Audio System 5-25
Automatic Heating and Air Conditioning System (Climate Control) 5-18
Automatic Light Operation 2-63
Automatic Stopping/Restarting of the Engine 3-29
Automatic Transmission (AT) Fluid 6-23
AUX 5-36
AUX/USB Socket 5-64
Average fuel consumption (Information Display) 2-32
Average speed / 5-minute average speed (Information Display) 2-34

B

Basic Operations (Audio System) 5-26
Before Driving 3-1
Bill/Coin Holder 5-67
Bluetooth® Audio 5-49
Bluetooth® Hands-free 5-42
Bottle Holder 5-66
Brake Assist System 3-48
Brake Discs and Brake Drums 6-27
Brake Fluid 6-24
Brake Pedal 3-13
Brake Pedal (Check) 6-26
Brakes 6-24
Braking 3-47
Brightness Control (Instrument Cluster) 2-27
Bulb Replacement 6-37

C
Cancelling Cruise Control ... 3-36
Catalytic Converter ... 4-1
Central Door Locking System ... 2-3
Changing Cruising Speed ... 3-35
Changing Engine Oil and Filter ... 6-15
Changing Oil ... 6-24
Changing Speed Temporarily ... 3-35
Changing Wheels ... 7-6
Charging Warning Light ... 2-55
Chassis Serial Number ... 9-1
Child Restraint
(for the 2nd Row Center Seat Type with the Lap Belt) ... 1-21
Child Restraint (for the 2nd Row Center Seat Type
with the Lap-Shoulder Belt) ... 1-23
Child Restraint System for
Countries Applied for UN Regulation No.16 ... 1-20
Child Restraint Systems ... 1-18
Child-Proof Locks (Rear Door) ... 2-4
Cleaning Exterior ... 8-4
Cleaning Interior ... 8-3
Clock ... 2-29
Clock and date (Information Display) ... 2-35
Clutch ... 6-22
Clutch Fluid ... 6-22
Clutch Pedal ... 6-22
Clutch Pedal (for Manual Transmission) ... 3-13
Coolant Level Check ... 6-18
Coolant Replacement ... 6-18
Corrosion Prevention ... 8-1
Cruise control ... 3-34
Cruise indicator light ... 2-61
Cup Holder and Storage Area ... 5-65
D
Daily Inspection Checklist ... 3-1
Deceleration Energy Regenerating Function ... 3-26
Description of Controls
(Automatic Heating and Air Conditioning System) ... 5-18
Description of Controls
(Digital Air Conditioning System) ... 5-11
Description of Controls
(Manual Heating and Air Conditioning System) ... 5-4
Digital Air Conditioning System ... 5-11
Display Range of Rearview Camera ... 3-45
Display Selection (Information Display) ... 2-30
Do not Drive in the Field Covered with Grown Grass ... 4-6
Door Locks ... 2-2
Drive Belt ... 6-13
Driver's Seat Belt Reminder Light /
Front Passenger's Seat Belt Reminder Light ... 1-15, 2-55
Driving on Hills ... 4-3
Driving on Slippery Roads ... 4-4
Driving range (Information Display) ... 2-33
Driving time (Information Display) ... 2-35
E
Electric Power Steering Light ... 2-58
Electronic Stability Program (ESP®) ... 3-50
Emergency Stop
(Vehicle with Keyless Push Start System) ... 3-16
Energy flow (Information Display) ... 2-36
ENG A-STOP Indicator Light ... 2-60
ENG A-STOP OFF Light ... 2-61, 3-27, 3-33

ENG A-STOP OFF Switch ... 3-33
ENG A-STOP System (Engine Auto Stop Start System) ... 3-28
Engine Coolant ... 6-17
Engine Hood ... 5-58
Engine Oil and Filter ... 6-13
Engine Oil Consumption ... 3-2
Engine Power Assist Function ... 3-26
Engine Serial Number ... 9-1
Engine Switch
(Vehicle with Keyless Push Start System) ... 3-5
Engine Switch Illumination ... 3-7
Engine Trouble: Does not Start ... 7-10
Engine Trouble: Overheating ... 7-10
Engine Trouble: Starter Does not Operate ... 7-9
Error Display Messages (Audio System) ... 5-54
ESP® OFF Indicator Light ... 2-54, 3-52
ESP® OFF Switch ... 3-52
ESP® Warning Light ... 2-54, 3-51
Exhaust Gas Warning ... 1-40, 3-1

F

Floor Console ... 5-62
Floor Mats ... 1-1
Fluid Level Check ... 6-23
Folding Rear Seats ... 1-7
Footrest ... 5-68
For Chile ... 10-3
For Mexico ... 10-1
For Thailand ... 10-4
Frame Hooks ... 5-70
Front Fog Light ... 6-39
Front Fog Light Indicator Light ... 2-60
Front Fog Light Switch ... 2-67
Front Passenger's Seat / 2rd Row Seat ... 5-63
Front Position Light ... 6-38
Front Seat Back Pocket ... 5-68
Front Seats ... 1-1
Front Turn Signal Light ... 6-38
Fuel ... 9-2, 10-1, 10-4
Fuel Filler Cap ... 5-57
Fuel gauge ... 2-26
Fuel Pump Labeling ... 10-1
Fuses ... 6-32
Fuses in Engine Compartment ... 6-33
Fuses under Dashboard ... 6-35

G

Gasoline Engine ... 9-2
Gear Oil (Manual Transmission) ... 6-21
Gear Oil Change (Manual Transmission) ... 6-21
Gear Oil Level Check (Manual Transmission) ... 6-21
Gearshift Indicator (Manual Transmission) ... 3-24
Glove Box ... 5-64
Guide me light ... 2-66

H

Hazard Warning Switch ... 2-68
Head Restraints ... 1-3, 1-6
Headlight ... 6-38
Headlight Aiming ... 6-36
Heated Rear Window Switch ... 2-72
Heating and Air Conditioning System ... 5-1
High-mount Stop Light ... 6-42
Highway Driving ... 4-3
Hill Hold Control System ... 3-53

Horn 2-71
How the ABS Works 3-49
How the System Works (Airbags) 1-37
How to Help Prevent Corrosion 8-1
How to Use Rearview Camera 3-45
How to Use the Parking Sensor 3-42
I
If the “PUSH” Indicator Light Blinks and the Engine Cannot be Started 3-17
If You Cannot Shift Automatic Transmission Gearshift Lever Out of “P” (PARK) 3-22
Ignition “ON” Indicator Light 2-59
Ignition Key Reminder 2-2
Ignition Switch (Vehicle without Keyless Push Start System) 3-3
Illumination Indicator Light 2-60
Immobilizer System 2-1
Immobilizer/Keyless Push Start System Warning Light 2-57
Important Information about Corrosion 8-1
Improving Fuel Economy 4-2
Information Display 2-28
Information shown after driving (Information Display) 2-37
Inside Rearview Mirror 2-21
Installation of Child Restraint with Top Tether 1-29
Installation of Radio Frequency Transmitters 5-25
Installation with ISOFIX Type Anchorages 1-27
Installation with Lap-Shoulder Seat Belts 1-26
Instantaneous fuel consumption (Information Display) 2-32
Instrument Cluster 2-25
Interior Light 5-61, 6-42
Interior Workable Area for Engine Starting, Ignition Mode Selection and “Remote Controller Outside” Warning 3-10
Intersection Guidance (When using Android AutoTM*1 or Apple CarPlay*2 on infotainment system)) 2-37
iPod 5-34
J
Jacking Instructions 7-3
Jump-Starting 7-7
K
Keyless Entry System Transmitter (Type A) 2-6
Keyless Entry System Transmitter / Keyless Push Start System Remote Controller 2-6
Keyless Push Start System 3-7
Keyless Push Start System Remote Controller (Type B) 2-9
Keys 2-1
L
Lap Belt (for Some Vehicles) 1-14
Lap-Shoulder Belt 1-12
Lead-acid Battery 6-30
License Plate Light 6-41
Light Reminder Buzzer 2-65
Lighting Control Lever 2-62
Lighting Operation 2-62
Lithium-ion Battery 3-29
Lithium-ion Battery Indication 3-27
Low Fuel Warning Light 2-57
Luggage Box 5-68

M
Main Beam (high beam) Indicator Light 2-58
Maintenance
(Automatic Heating and Air Conditioning System) 5-24
Maintenance (Digital Air Conditioning System)..... 5-17
Maintenance
(Manual Heating and Air Conditioning System) 5-9
Maintenance Recommended under
Severe Driving Conditions..... 6-8
Maintenance Schedule 6-2
Malfunction Indicator Light..... 2-56
Manual Heating and Air Conditioning System..... 5-4
Manual Transmission 3-18
Master Warning Indicator Light..... 2-61
Mirrors 2-21
Motion (Information Display)..... 2-35
N
Non-disassembled Type Lights..... 6-37
O
Off-road Driving 4-6
Oil Filter Replacement..... 6-16
Oil Level Check 6-14
Oil Pressure Warning Light 2-53
Open Door Warning Light..... 2-57
Other Holes 5-72
Outside Rearview Mirrors 2-21
Outside Rearview Mirrors Folding Switch..... 2-22
Over Drive Off Indicator 2-60
P
Parking Brake..... 6-27
Parking Brake Lever 3-11
Parking Brake Reminder Buzzer..... 3-12
Parking Sensor System 3-36
Parking Sensors..... 3-36
Pedal..... 3-12
Periodic Maintenance Schedule 6-2
Pinching Prevention Function 2-20
Points to Note During the Automatic Engine Stop 3-31
Power Window Controls..... 2-18
Power-assisted Brakes..... 3-47
R
Radio 5-29
Radio Antenna..... 5-24
Raising Vehicle with Garage Jack 7-4
Rear Armrest 5-67
Rear Combination Light (Tail, Stop, Turn Signal, etc.)..... 6-40
Rear Seats..... 1-4
Rear Window Wiper/Washer Switch..... 2-70
Rearview Camera 3-43
Rearview Camera Location 3-44
Refill with Oil and Oil Leakage Check 6-17
Refilling (Engine Oil)..... 6-14
Remote Folding Mirrors..... 2-22
Replacement of the Battery..... 6-31
Returning the Ignition Mode to “LOCK” (OFF)..... 3-18
Roof Rails 5-69
Running-in 4-1
S
Safety Information (Audio System) 5-25
Seat Adjustment..... 1-1, 1-4
Seat Belt Catch Hole (for 2nd Row Seats) 1-16
Seat Belt Inspection..... 1-16

Seat Belt Pretensioner System 1-17
Seat Belts and Child Restraint Systems 1-9
Selection of Coolant 6-17
Selection of Ignition Modes 3-8
Selector Position (for automatic transmission vehicles) / Gearshift Indicator (for manual transmission vehicles) 2-38
Set Sensors (Parking Sensors) 3-41
Setting cruising speed 3-34
Setting Mode (Information Display) 2-39
Setting of Bluetooth® Devices 5-37
Side Door Locks 2-2
Side Turn Signal Light 6-39
Smart Hybrid 3-25
Snow Chains 4-4
Spark Plugs 6-19
Specifications 9-3
Specified Fluid 6-23
Specified Gear Oil 6-21
Specified Oil (Engine Oil) 6-13
Speedometer 2-26
Stability Control System 3-50
Starter Motor Function 3-27
Starting / Stopping Engine (Vehicle with Keyless Push Start System) 3-14
Starting / Stopping Engine (Vehicle without Keyless Push Start System) 3-13
Starting a Cold and Warm Engine 3-16
Steering Switch 5-52
Steering Wheel 6-28
Stopping Engine 3-16
Stuck Vehicle 4-5
Sun Visor 5-60
System Operating Instructions (Automatic Heating and Air Conditioning System) 5-22
System Operating Instructions (Digital Air Conditioning System) 5-16
System Operating Instructions (Manual Heating and Air Conditioning System) 5-8
System Settings 5-29

T

Tachometer 2-26
Tailgate 2-4
Talk Button 5-56
Temperature Gauge 2-27
Theft Deterrent Alarm System 2-14
Theft Deterrent Light 2-18
Thermometer 2-30
Tilt Steering Lock Lever 2-71
Torque and power (Information Display) 2-36
Total idling stop time and total idling fuel saved (Information Display) 2-35
Towing Your Vehicle 7-8
Traction Control System 3-50
Trailer Towing Your Vehicle 2-73
Transmission Warning Light 2-56
Trip Meter / Odometer 2-38
Troubleshooting (Audio System) 5-53
Turn Signal Control Lever 2-67
Turn Signal Indicators 2-58
Turn Signal Operation 2-67
Tyre Changing Tool 7-1
Tyre Inspection 6-28

Tyre Rotation 6-30, 10-1
Tyres 6-28
U
Unreleased Steering Lock Warning 3-6
USB 5-31
Using the Transmission (Manual Transmission) 3-18
V
Vehicle Cleaning 8-2
Vehicle Identification 9-1, 10-2
Vehicle Loading 2-72
W
Walk-in Type Seats (for 2nd Row Seats) 1-5
Warning and Indicator Lights 2-52
Warning and Indicator Messages 2-41
Warning Label of SRS Airbag for
Front Passenger's Seat 1-36
Washing 8-4
Waxing 8-6
When Encountering a Flooded Area 4-6
Windows 2-18
Windshield Washer 2-69
Windshield Washer Fluid 6-47
Windshield Wiper and Washer Lever 2-68
Windshield Wipers 2-69
Wiper and Washer Operation 2-69
Wiper Blades 6-43

MEMO

Information of the radio device: Type 73R0

1. Name and postal address of the manufacturer

   Name: DENSO TEN Limited
   Address: 2-28, Gosho-dori 1-chome, Hyogo-ku, Kobe, 652-8510 Japan

2. Simplified EU declaration of conformity

С настоящото DENSO TEN Limited декларира, че този тип радиосъоръжение 73R0 е в съответствие с Директива 2014/53/ЕС.
Цялостният текст на ЕС декларацията за съответствие може да се намери на следния интернет адрес:
https://www.denso-ten.com/support/regulation/eu_doc/
При оборудване с Bluetooth функционалност.

Функция	Работна честотна лента	Максимална радиочестотна мощност
Bluetooth	2400 – 2480 MHz	1.06 mW e.i.r.p.

Ovim putem, DENSO TEN Limited izjavljuje da je vrsta radio opreme 73R0 u saglasnosti s Direktivom 2014/53/EU.
Cijeli tekst EC deklaracije o usaglašenosti je dostupan na sljedećoj internetskoj adresi:
https://www.denso-ten.com/support/regulation/eu_doc/
Ako postoji Bluetooth funkcionalnost.

Funkcija	Radni frekvencijski pojas	Maksimalna rediofrekvencijska snaga
Bluetooth	2400 – 2480 MHz	1.06 mW e.i.r.p.

Tímto DENSO TEN Limited prohlašuje, že typ rádiového zařízení 73R0 je v souladu se směrnicí 2014/53/EU.
Úplné znění EU prohlášení o shodě je k dispozici na této internetové adrese:
https://www.denso-ten.com/support/regulation/eu_doc/
V případě dostupnosti funkčnost Bluetooth.

Funkce	Provozní frekvenční pásmu	Maximální radiofrekvenční výkon
Bluetooth	2400 – 2480 MHz	1.06 mW e.i.r.p.

Hermed erklærer DENSO TEN Limited, at radioudstyrstypen 73R0 er i overensstemmelse med direktiv 2014/53/EU.
EU-overensstemmelseserklæringens fulde tekst kan findes på følgende internetadresse:
https://www.denso-ten.com/support/regulation/eu_doc/
Når det er udstyret med Bluetooth-funktionalitet.

Funktion	Driftsfrekvensbandet	Maksimal radio-frekvens effekt
Bluetooth	2400 – 2480 MHz	1.06 mW e.i.r.p.

Hiermit erklärt DENSO TEN Limited, dass der Funkanlagentyp 73R0 der Richtlinie 2014/53/EU entspricht.
Der vollständige Text der EU-Konformitätserklärung ist unter der folgenden Internetadresse verfügbar:
https://www.denso-ten.com/support/regulation/eu_doc/
Sofern mit Bluetooth-Funktionalität ausgestattet.

Funktion	Betriebsfrequenzband	Maximale Hochfrequenzleistung
Bluetooth	2400 – 2480 MHz	1.06 mW e.i.r.p.

Με την παρούσα ο/η DENSO TEN Limited, δηλώνει ότι ο ραδιοεξοπλισμός 73R0 πληροί την οδηγία 2014/53/ΕΕ.
Το πλήρες κείμενο της δήλωσης συμμόρφωσης ΕΕ διατίθεται στην ακόλουθη ιστοσελίδα στο διαδίκτυο:
https://www.denso-ten.com/support/regulation/eu_doc/
Με λειτουργικότητα Bluetooth.

Λειτουργία	Ζώνη συχνοτήτων λειτουργίας	Μέγιστη ισχύς ραδιοσυχνότητας
Bluetooth	2400 – 2480 MHz	1.06 mW e.i.r.p.

Hereby, DENSO TEN Limited declares that the radio equipment type 73R0 is in compliance with Directive 2014/53/EU.
The full text of the EU declaration of conformity is available at the following internet address:
https://www.denso-ten.com/support/regulation/eu_doc/
Where equipped with Bluetooth functionality.

Function	Operating frequency band	Maximum radio-frequency power
Bluetooth	2400 – 2480 MHz	1.06 mW e.i.r.p.

Por la presente, DENSO TEN Limited declara que el tipo de equipo radioeléctrico 73R0 es conforme con la Directiva 2014/53/UE.
El texto completo de la declaración UE de conformidad está disponible en la dirección Internet siguiente:
https://www.denso-ten.com/support/regulation/eu_doc/
Si incorpora la funcionalidad Bluetooth.

Función	Banda de frecuencia operativa	Potencia máxima de la radiofrecuencia
Bluetooth	2400 – 2480 MHz	1.06 mW e.i.r.p.

Käesolevaga deklareerib DENSO TEN Limited, et käesolev raadioseadme tüüp 73R0 vastab direktiivi 2014/53/EL nõuetele.
ELi vastavusdeklaratsiooni täielik tekst on kättesaadav järgmisel internetiaadressil:
https://www.denso-ten.com/support/regulation/eu_doc/
Bluetooth funktsionaalsuse olemasolul.

Funktsioon	Töösageduse laineala	Maksimaalne raadiosageduslik võimsus
Bluetooth	2400 – 2480 MHz	1.06 mW e.i.r.p.

DENSO TEN Limited vakuuttaa, että radiolaitetyyppi 73R0 on direktiivin 2014/53/EU mukainen.
EU-vaatimustenmukaisuusvakuutuksen täysimittainen teksti on saatavilla seuraavassa internetosoitteessa:
https://www.denso-ten.com/support/regulation/eu_doc/
Jos varustettu Bluetooth-toiminnallisuudella.

Toiminto	Toimintataajuuskaista	Maksimi radiotaajuusteho
Bluetooth	2400 – 2480 MHz	1.06 mW e.i.r.p.

Le soussigné, DENSO TEN Limited, déclare que l'équipement radioélectrique du type 73R0 est conforme à la directive 2014/53/UE.
Le texte complet de la déclaration UE de conformité est disponible à l'adresse internet suivante:
https://www.denso-ten.com/support/regulation/eu_doc/
Si équipé de la fonctionnalité Bluetooth.

Fonction	Bande de fréquence de fonctionnement	Puissance maximale de la radiofréquence
Bluetooth	2400 – 2480 MHz	1.06 mW e.i.r.p.

Leis seo, dearbhaíonn DENSO TEN Limited go gcomhlíonann an cineál trealaimh raidió 73R0 Treoir 2014/53/EU.
Tá an téacs iomlán den dearbhú comhréireachta AE ar fáil ag an seoladh Idirlín seo a leanas:
https://www.denso-ten.com/support/regulation/eu_doc/
Sa chás go bhfuil feidhmiúlacht Bluetooth feistithe.

Feidhm	Banda minicíochta oibriúcháin	Uaschumhacht radaimhinicíochta
Bluetooth	2400 – 2480 MHz	1.06 mW e.i.r.p.

DENSO TEN Limited ovime izjavljuje da je radijska oprema tipa 73R0 u skladu s Direktivom 2014/53/EU.
Cjeloviti tekst EU izjave o sukladnosti dostupan je na sljedećoj internetskoj adresi:
https://www.denso-ten.com/support/regulation/eu_doc/
Kada je opremljeno funkcionalnošću Bluetooth.

Funkcija	Radni frekvencijski pojas	Maksimalna rediofrekvencijska snaga
Bluetooth	2400 – 2480 MHz	1.06 mW e.i.r.p.

DENSO TEN Limited igazolja, hogy a 73R0 típusú rádióberendezés megfelel a 2014/53/EU irányelvnek.
Az EU-megfelelőségi nyilatkozat teljes szövege elérhető a következő internetes címen:
https://www.denso-ten.com/support/regulation/eu_doc/
Ha van beépített Bluetooth funkcionalitás.

Funkció	Üzemi frekvencia-tartomány	Maximális rádiófrekvenciás teljesítmény
Bluetooth	2400 – 2480 MHz	1.06 mW e.i.r.p.

Hér með, lýsir DENSO TEN Limited því yfir að gerð útvarpsbúnaðarins 73R0 samræmist tilskipun 2014/53/EU.
Allur texti ESB-samræmisyfirlýsingarinnar er aðgengilegur á eftirfarandi veffangi:
https://www.denso-ten.com/support/regulation/eu_doc/
Þegar Bluetooth-virkni fylgir.

Aðgerð	Notkunartíðni hljómsveit	Hámarks útvarp-tíðni vald
Bluetooth	2400 – 2480 MHz	1.06 mW e.i.r.p.

Il fabbricante, DENSO TEN Limited, dichiara che il tipo di apparecchiatura radio 73R0 è conforme alla direttiva 2014/53/UE.
Il testo completo della dichiarazione di conformità UE è disponibile al seguente indirizzo Internet:
https://www.denso-ten.com/support/regulation/eu_doc/
Nei casi in cui è presente la funzionalità Bluetooth.

Funzione	Frequenza operative	Massima potenza a radiofrequenza
Bluetooth	2400 – 2480 MHz	1.06 mW e.i.r.p.

Aš, DENSO TEN Limited, patvirtinu, kad radijo įrenginių tipas 73R0 atitinka Direktyvą 2014/53/ES.
Visas ES atitikties deklaracijos tekstas prieinamas šiuo interneto adresu:
https://www.denso-ten.com/support/regulation/eu_doc/
Kai yra Bluetooth funkcionalumas.

Funkcija	Veikimo dažnių juosta	Maksimalus radijo dažnių galingumas
Bluetooth	2400 – 2480 MHz	1.06 mW e.i.r.p.

Ar šo DENSO TEN Limited deklarē, ka radioiekārta 73R0 atbilst Direktīvai 2014/53/ES.
Pilns ES atbilstības deklarācijas teksts ir pieejams šādā interneta vietnē:
https://www.denso-ten.com/support/regulation/eu_doc/
Ja aprīkots ar Bluetooth funkcionalitāti.

Funkcija	Darba frekvences josla	Maksimālā radiofrekvences jauda
Bluetooth	2400 – 2480 MHz	1.06 mW e.i.r.p.

Со ова, DENSO TEN Limited изјавува дека радио опремата од типот 73R0 е во согласност со Директивата 2014/53/EU.
Целиот текст на ЕУ изјавата за сообразност е достапен на следната интернет адреса:
https://www.denso-ten.com/support/regulation/eu_doc/
Онаму каде што е опремено со функционалност за Bluetooth.

Функција	Работен фреквенциски опсег	Максимална радио-фреквенциска моќ
Bluetooth	2400 – 2480 MHz	1.06 mW e.i.r.p.

Ovim, DENSO TEN Limited izjavljuje da je tip radio opreme 73R0 u skladu sa Direktivom 2014/53/EU.
Cjelokupan tekst EU deklaracije o usklađenosti dostupan je na sljedećoj internet adresi:
https://www.denso-ten.com/support/regulation/eu_doc/
Ako je prisutna Bluetooth funkcionalnost.

Funkcija	Operativni frekvencijski opseg	Maksimalna jačina radio frekvencije
Bluetooth	2400 – 2480 MHz	1.06 mW e.i.r.p.

B'dan, DENSO TEN Limited, niddikjara li dan it-tip ta' tagħmir tar-radju 73R0 huwa konformi mad-Direttiva 2014/53/UE.
It-test kollu tad-dikjarazzjoni ta' konformità tal-UE huwa disponibbli f'dan l-indirizz tal-Internet li ġej:
https://www.denso-ten.com/support/regulation/eu_doc/
Fejn mgħammar b'funzjonalità Bluetooth.

Funzjoni	Band tal-frekwenza operattiva	l-enerġija massima bi frekwenza tar-radju
Bluetooth	2400 – 2480 MHz	1.06 mW e.i.r.p.

Hierbij verklaar ik, DENSO TEN Limited, dat het type radioapparatuur 73R0 conform is met Richtlijn 2014/53/EU.
De volledige tekst van de EU-conformiteitsverklaring kan worden geraadpleegd op het volgende internetadres:
https://www.denso-ten.com/support/regulation/eu_doc/
Waar uitgerust met Bluetooth-functionaliteit.

Functie	Actieve frequentieband	Maximale radiofrequentie
Bluetooth	2400 – 2480 MHz	1.06 mW e.i.r.p.

DENSO TEN Limited erklærer herved at radioutstyrstypen 73R0 er i samsvar med direktiv 2014/53/EU.
Den fullstendige teksten i EU-erklæringen er tilgjengelig på følgende internettadresse:
https://www.denso-ten.com/support/regulation/eu_doc/
Hvis utstyrt med Bluetooth-funksjonalitet.

Funksjon	Driftsfrekvensbånd	Maksimal radiofrekvent strøm
Bluetooth	2400 – 2480 MHz	1.06 mW e.i.r.p.

DENSO TEN Limited niniejszym oświadcza, że typ urządzenia radiowego 73R0 jest zgodny z dyrektywą 2014/53/UE.
Pełny tekst deklaracji zgodności UE jest dostępny pod następującym adresem internetowym:
https://www.denso-ten.com/support/regulation/eu_doc/
Jeśli jest wyposażony w funkcjonalność Bluetooth.

Funkcja	Pasmo częstotliwości pracy	Maksymalna moc częstotliwości radiowej
Bluetooth	2400 – 2480 MHz	1.06 mW e.i.r.p.

O(a) abaixo assinado(a) DENSO TEN Limited declara que o presente tipo de equipamento de rádio 73R0 está em conformidade com a Diretiva 2014/53/UE.
O texto integral da declaração de conformidade está disponível no seguinte endereço de Internet:
https://www.denso-ten.com/support/regulation/eu_doc/
Quando equipado com funcionalidade Bluetooth.

Função	Faixa de freqüência operacional	Potência máxima de radiofreqüência
Bluetooth	2400 – 2480 MHz	1.06 mW e.i.r.p.

Prin prezenta, DENSO TEN Limited declară că tipul de echipamente radio 73R0 este în conformitate cu Directiva 2014/53/UE.
Textul integral al declarației UE de conformitate este disponibil la următoarea adresă internet:
https://www.denso-ten.com/support/regulation/eu_doc/
Dacă unde este echipat cu funcționalitate Bluetooth.

Funcție	Bandă de frecvență activă	Puterea maximă a radio-frecvenței
Bluetooth	2400 – 2480 MHz	1.06 mW e.i.r.p.

DENSO TEN Limited týmto vyhlasuje, že rádiové zariadenie typu 73R0 je v súlade so smernicou 2014/53/EÚ.
Úplné EÚ vyhlásenie o zhode je k dispozícii na tejto internetovej adrese:
https://www.denso-ten.com/support/regulation/eu_doc/
V prípade, že je vybavené funkčnosťou Bluetooth.

Funkcia	Prevádzkové frekvenčné pásmo	Maximálny rádiofrekvenčný výkon
Bluetooth	2400 – 2480 MHz	1.06 mW e.i.r.p.

DENSO TEN Limited potrjuje, da je tip radijske opreme 73R0 skladen z Direktivo 2014/53/EU.
Celotno besedilo izjave EU o skladnosti je na voljo na naslednjem spletnem naslovu:
https://www.denso-ten.com/support/regulation/eu_doc/
Če je opremljen s funkcionalnostjo Bluetooth.

Funkcija	Delovni frekvenčni pas	Maksimalna radiofrekvenčna moč
Bluetooth	2400 – 2480 MHz	1.06 mW e.i.r.p.

Nëpërmjet kësaj, DENSO TEN Limited deklaron se lloji i aparatit të radios 73R0 është në përputhje me Direktivën 2014/53/EU.
Teksti i plotë i deklaratës së BE-së mbi përputhshmërinë është i disponueshëm në adresën e mëposhtme të internetit:
https://www.denso-ten.com/support/regulation/eu_doc/
Aty ku është e pajisur me funksionalitetin e Bluetooth.

Funksion	Banda e frekuencës së punës	Fuqia maksimale e frekuencave radio
Bluetooth	2400 – 2480 MHz	1.06 mW e.i.r.p.

Ovim, DENSO TEN Limited izjavljuje da je ovaj tip radijske opreme 73R0 u skladu sa odredbama Direktive 2014/53/EU.
Kompletan tekst EU deklaracije o konformitetu je dostupan na sledećoj internet adresi:
https://www.denso-ten.com/support/regulation/eu_doc/
Ako je prisutna Bluetooth funkcionalnost.

Funkcija	Radni frekvencijski pojas	Maksimalna rediofrekvencijska snaga
Bluetooth	2400 – 2480 MHz	1.06 mW e.i.r.p.

Härmed försäkrar DENSO TEN Limited att denna typ av radioutrustning 73R0 överensstämmer med direktiv 2014/53/EU.
Den fullständiga texten till EU-försäkran om överensstämmelse finns på följande webbadress:
https://www.denso-ten.com/support/regulation/eu_doc/
Om utrustad med Bluetooth-funktionalitet.

Funktion	Operationsfrekvensbandet	Maximal radiofrekvenseffekt
Bluetooth	2400 – 2480 MHz	1.06 mW e.i.r.p.

DENSO TEN Limited, 73R0 türü telsiz ekipmanının 2014/53/EU Direktifine uygun olduğunu beyan etmektedir.
AB uygunluk beyanının tam metnine aşağıdaki internet adresinden ulaşılabilir:
https://www.denso-ten.com/support/regulation/eu_doc/
Bluetooth işlevselliğine sahip yerlerde.

İşlev	Çalışma frekans bandı	Maksimum radyo-frekans gücü
Bluetooth	2400 – 2480 MHz	1.06 mW e.i.r.p.

This product has been Type Approved by Jamaica: SMA-73RO.

CAUTION: Radio Frequency Radiation Exposure
This equipment complies with FCC radiation exposure limits set forth for uncontrolled equipment and meets the FCC radio frequency (RF) Exposure Guidelines. This equipment has very low levels of RF energy that is deemed to comply without maximum permissive exposure evaluation (MPE). But it is desirable that it should be installed and operated with at least 20cm and more between the radiator and person's body in normal use position.

Co-location: This transmitter must not be co-located or operated in conjunction with any other antenna or transmitter.

This device complies with part 15 of the FCC Rules. Operation is subject to the following two conditions: (1) This device may not cause harmful interference, and (2) this device must accept any interference received, including interference that may cause undesired operation.

FCC WARNING
Changes or modifications not expressly approved by the party responsible for compliance could void the user's authority to operate the equipment.

La operación de este equipo está sujeta a las siguientes dos condiciones: (1) es posible que este equipo o dispositivo no cause interferencia perjudicial y (2) este equipo o dispositivo debe aceptar cualquier interferencia, incluyendo la que pueda causar su operación no deseada.





K56R0,K73R0,R55R2,P55R0,I55R0,T55R1,R55R3,T55R2



FCC CAUTION
Changes or modifications not expressly approved by the party responsible for compliance could void the user's authority to operate the equipment.

This device complies with part 15 of the FCC Rules. Operation is subject to the following two conditions: (1) This device may not cause harmful interference, and (2) this device must accept any interference received, including interference that may cause undesired operation.

●The Federal Communications Commission (FCC) ID number is indicated in the illustrated position.

（T55R2） FCC ID：OUCT55R2

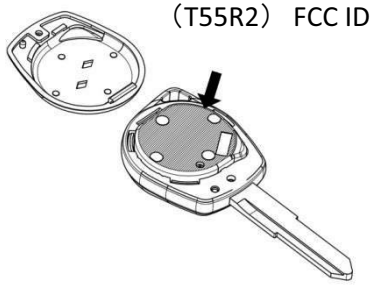

（R55R3） FCC ID：OUCR55R3

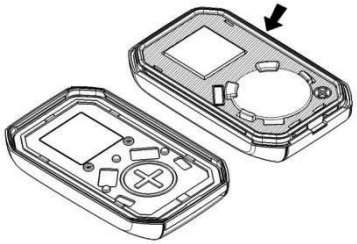

K56RQ	K73R0	P55R0
IFETEL:RLVOMK518-0255	IFETEL:RLVOMK718-0244	IFETEL:RLVOMP518-0257
R55R3	T55R1	I55R0
IFETEL:RLVOMK518-0256	IFETEL:RLVOMT518-0652	IFETEL:RLVOMI518-0653

Microsoft WMT License

This product is protected by certain intellectual property rights of Microsoft Corporation and third parties.

Use or distribution of such technology outside of this product is prohibited without a license from Microsoft or an authorized Microsoft subsidiary and third parties.

Windows Media is either a registered trademark or trademark of Microsoft Corporation in the United States and/or other countries.

TRC/SS/2018/215

ZICTA

ZMB/ZICTA/TA/2019/2/67

86TS0-01E



NAME CENSU S.A.
ADDRESS AVDA. RCA. ARGENTINA NRO. 900
ESQ LOPEZ MOREIRA
PHONE +595 21 600 700

NR:2018-03-I-000083	OMRON I55R0	NR:2019-04-I-000229	OMRON K72R0
NR:2018-03-I-000082	OMRON T55R1		
NR:2018-03-I-000092	OMRON T55R2		
NR:2018-03-I-000093	OMRON R55R3		
NR:2018-05-I-000184	OMRON K56R0		
NR:2018-05-I-000185	OMRON K73R0		
NR:2018-05-I-000186	OMRON P55R0		

Fabricados por OMRON Automotive Electronics, Co. Ltd.