Jimny

OWNER'S MANUAL

Keep With Vehicle At All Times.
Contains Important Information
On Safety, Operation & Maintenance.

SUZUKI

This owner's manual applies to the JIMNY series.



NOTE: The illustrated model is one of the JIMNY series.

Copyright © **Suzuki Motor Corporation** 2025 All Rights Reserved
No part of this document may be reproduced or transmitted in any form or by any means, electronic or mechanical, for any purpose, without the express written permission of Suzuki Motor Corporation.

FOREWORD

This manual should be considered as a permanent part of the vehicle and should remain with the vehicle when resold or otherwise transferred to a new owner or operator. Please read this manual carefully before operating your new SUZUKI vehicle and review the manual from time to time. It contains important information on safety, operation and maintenance.

Suzuki Motor Corporation

All information in this manual is based on the latest product information available at the time of publication. Due to improvements or other changes, there may be discrepancies between information in this manual and your vehicle. SUZUKI MOTOR CORPORATION reserves the right to make production changes at any time, without notice and without incurring any obligation to make the same or similar changes to vehicles previously built or sold.

This vehicle may not comply with standards or regulations of other countries. Before attempting to register this vehicle in any other country, check all applicable regulations and make any necessary modifications.

IMPORTANT

⚠WARNING/⚠CAUTION/*NOTICE*/ *NOTE*

Please read this manual and follow its instructions carefully. To emphasize special information, the symbol ⚠ and the words **WARNING**, **CAUTION**, ***NOTICE*** and *NOTE* have special meanings. Pay particular attention to messages highlighted by these signal words:

⚠ WARNING
Indicates a potential hazard that could result in death or serious injury.

⚠ CAUTION
Indicates a potential hazard that could result in minor or moderate injury.

NOTICE
Indicates a potential hazard that could result in vehicle damage.

NOTE:
Indicates special information to make maintenance easier or instructions clearer.

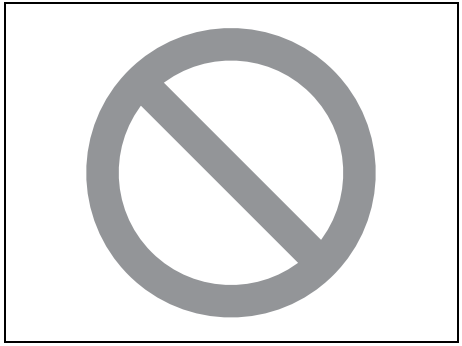

75F135

The circle with a slash in this manual means “Do not do this” or “Do not let this happen”.

MODIFICATION WARNING

⚠ WARNING

Do not modify this vehicle. Modification could adversely affect safety, handling, performance, or durability and may violate governmental regulations. In addition, damage or performance problems resulting from modification may not be covered under warranty.
Such modifications also affect advanced safety equipment such as the SUZUKI SAFETY SUPPORT, and there is a danger that it may not operate properly or may operate in situations where it should not.

NOTICE

Improper installation of mobile communication equipment such as cellular telephones, CB (Citizen’s Band) radios or any other wireless transmitters may cause electronic interference with your vehicle’s ignition system or any other electrical systems, resulting in vehicle performance problems. Consult an authorized SUZUKI dealer or qualified service technician for advice.

NOTICE

The diagnostic connector of your vehicle is prepared only for the specific diagnostic tool for inspection and service purpose. Connecting any other tool or device may interfere with electronic parts operations and cause running out of batteries.

INTRODUCTION

Thank you for choosing SUZUKI product and welcome to our growing family. Your choice was a wise one; SUZUKI products have great value that will give you driving pleasure for years.

This owner's manual was prepared to give you a safe, enjoyable, and trouble-free experience with your SUZUKI vehicle. In this manual, you will learn about the vehicle's operation, its safety features and maintenance requirements. Please read the manual carefully before operating your vehicle. Afterwards, keep this manual in the glove box for further reference.

Should you resell the vehicle, please leave this manual with it for the next owner.

In addition to the owner's manual, the other booklets provided with your SUZUKI vehicle explain the vehicle's warranties. We recommend you read them as well to familiarize yourself with this important information.

When planning the regular scheduled maintenance of your SUZUKI vehicle, we recommend you visit your local SUZUKI dealer. Their factory-trained technicians will provide the best possible service and use only genuine SUZUKI parts and accessories or their equivalents.

NOTE:
- *"SUZUKI dealer" means an Authorized Suzuki Dealer and an Authorized Suzuki Service Workshop.*
- *The illustrations in this manual represent a typical variation, which may differ from your vehicle.*

Suzuki Motor Corporation

RECOMMENDATION OF GENUINE SUZUKI PARTS AND ACCESSORIES USE

SUZUKI strongly recommends the use of genuine SUZUKI parts and accessories. Genuine SUZUKI parts and accessories are built to the highest standards of quality and performance, and are designed to fit your vehicle's exact specifications.

A wide variety of non-genuine replacement parts and accessories for SUZUKI vehicles are currently available in the market. Using these parts and accessories can affect the vehicle performance and shorten its useful life. Therefore, installation of non-genuine SUZUKI parts and accessories is not covered under warranty.

Non-genuine SUZUKI parts and accessories

Some parts and accessories may be approved by certain authorities in your country.
Some parts and accessories are sold as SUZUKI-authorized replacement parts and accessories. Some genuine SUZUKI parts and accessories are sold as re-use parts and accessories. These parts and accessories are non-genuine SUZUKI parts and accessories and use of these parts is not covered under warranty.

Re-use of genuine SUZUKI parts and accessories

The resale or re-use of the following items which could cause hazards for users is expressly forbidden:

- Airbag components and all other pyrotechnic items, including their components (e.g. cushion, control devices and sensors)
- Seat belt system, including their components (e.g. webbing, buckles and retractors)

The airbag and seat belt pretensioner components contain explosive chemicals. These components should be removed and disposed of properly by SUZUKI-authorized service shop or scrap yard to avoid unintended explosion before scrapping.

Vehicle Data Recordings

There are certain components of your vehicle (the “Vehicle”) incorporating data storage modules or memories, which temporarily or permanently store the technical data below listed. These data are exclusively technical and serve for (i) identifying and correcting faults occurred in the Vehicle and/or (ii) optimizing functions of the Vehicle.

Recorded data

- Status of vehicle such as engine speed, etc.
- Vehicle conditions such as vehicle speed, travel distance, average fuel consumption, average speed, driving time, fuel consumption, total idling fuel saved, total idling stop time, etc.
- Conditions of the transmission such as gear position
- Operating conditions such as accelerator, brake, steering angle and shift position, etc.
- Information on malfunction of various computer systems
- Information on SRS airbag system operation (the data will be recorded in the EDR (Event Data Recorder)
- Operating conditions of the driving assist systems
- Images from the front camera (DSBS II) (if equipped)

NOTE:
- *The data cannot be used to detect the Vehicle’s movements.*
- *The data stored in data storage modules or memories differ according to the Vehicle’s grade, model and destinations.*
- *No conversation, noise/sound, nor images in the Vehicle will be recorded in any event.*
- *The data may not be recorded in some situations.*
- *The image recording function by the front camera (DSBS II) can be disabled depending on the countries and regions. Consult an authorized SUZUKI dealer or a qualified workshop for details. (If it is set not to record image data, no data will remain when the system is operating.)*

If these technical data are combined with other information (e.g. accident or witness report, damage on the Vehicle, etc.), there may be cases that such data may identify a specific person.

Parties who can read out the technical data using specific diagnostic devices (the “Parties”);
- Authorized distributors, dealers and repairers/service workshops of SUZUKI vehicles, and independent repairers/service workshops
- Manufacturer of SUZUKI vehicles (e.g. SUZUKI MOTOR CORPORATION (“SUZUKI”), Magyar Suzuki Corporation Ltd., Maruti Suzuki India Limited, Suzuki Motor (Thailand) Co., Ltd., Thai Suzuki Motor Co., Ltd.)
- Suppliers of SUZUKI vehicle parts, components and accessories (the “Suppliers”)

Data usage (the “Data Usage”)
SUZUKI and the Parties may use the Recorded Data in the modules or memories for the purpose of vehicle accident analysis, diagnose malfunctions, research and developments, quality improvements etc.

After an error has been corrected, data related to such error are basically deleted from error storage module or memory, while certain data are overwritten or kept further.

Conditions under which SUZUKI and the Parties can disclose or provide any of the Recorded Data to a third party
SUZUKI and the Parties may disclose or provide any of the Recorded Data to a third party under any of the following conditions:
- A consent from the Vehicle owner/user(s), or from lessee of the Vehicle (in case of lease) is obtained.
- It is officially requested by police, prosecutor, court, or other authorities.
- It is provided to a research institute for statistical study after processing in such a manner that owner/user(s) of the Vehicle cannot be identified.
- It is used by SUZUKI or the Parties or their directors, officers or employees for the purposes described in the Data Usage.
- It is used by SUZUKI or the Parties in a lawsuit.
- Any other cases allowed by applicable laws and regulations.

If required, you may receive further information from each of the Parties other than the Suppliers.

Erasing data
The data listed in the *“*Recorded Data*”* can be erased by an authorized SUZUKI dealer or a qualified workshop, excluding items necessary for vehicle maintenance and compliance with regulations.
SUZUKI will not be responsible for any data leakage of the data listed in the *“*Recorded Data*”* caused by not erasing the data when the Vehicle is handed over or scrapped. Please request an authorized SUZUKI dealer or a qualified workshop to erase the data at your discretion.

Event Data Recorder (EDR) of SRS airbag

EDR stands for Event Data Recorder.
The data will be recorded in the event of an accident such as SRS airbag being activated. Refer to the *"*What is SRS airbag system?*"* (P.1-32).

eCall

Functions added based on agreement with the customer may transmit certain vehicle data (e.g. vehicle location in emergency cases) from the Vehicle to police or emergency service official for the purpose of rescue or response to traffic accident.

SERVICE STATION GUIDE

1. Engine hood release handle (see section 5)
2. Engine coolant (see section 6)
3. Windshield washer fluid/ Headlight washer fluid (see section 6)
4. Engine oil dipstick (see section 6)
5. Lead-acid battery (see section 6)
6. Fuel lid release lever (see section 5 / see section 9)
7. Tyre pressure (see tyre information label on driver's door lock pillar)
8. Tyre/wheel replacement tools (see section 7)
9. Spare tyre (see section 6)

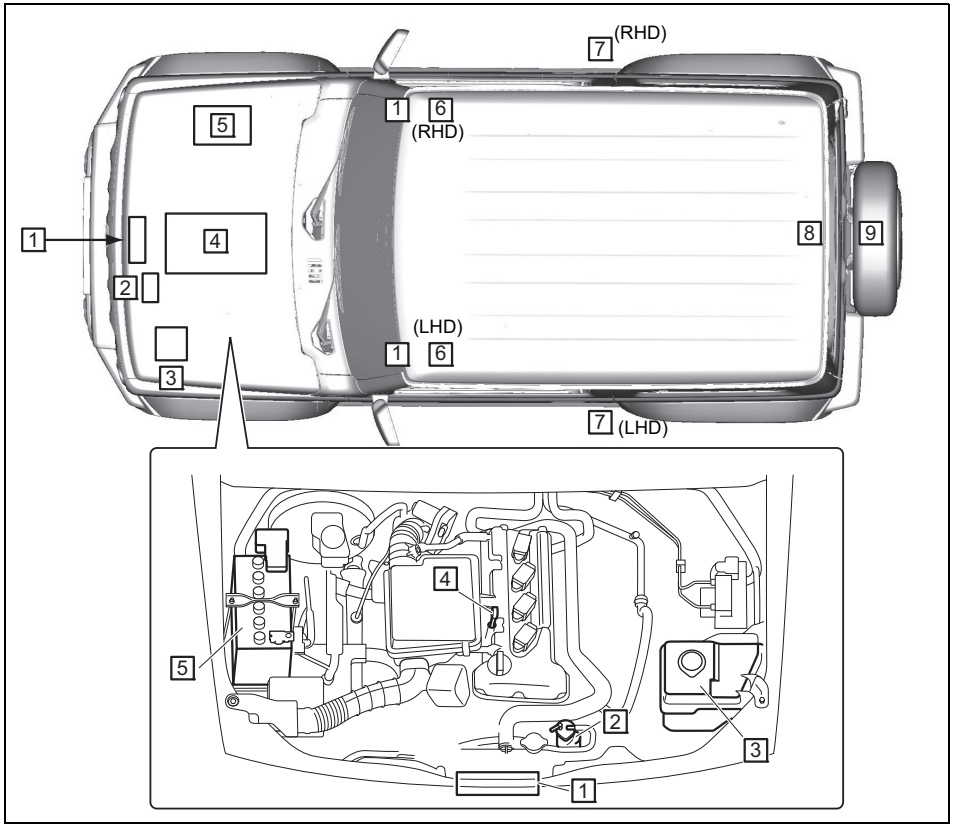

78RM00010

LHD: Left Hand Drive
RHD: Right Hand Drive

TABLE OF CONTENTS

FOR SAFE DRIVING	1
BEFORE DRIVING	2
OPERATING YOUR VEHICLE	3
DRIVING TIPS	4
OTHER CONTROLS AND EQUIPMENT	5
INSPECTION AND MAINTENANCE	6
EMERGENCY SERVICE	7
APPEARANCE CARE	8
SPECIFICATION	9
SUPPLEMENT	10
INDEX	11

EXTERIOR, FRONT

(1) Fuel filler cap (P.5-1)
(2) Door (P.2-2)
(3) Front camera (DSBS II) (if equipped) (P.3-50)
(4) Windshield wiper (P.2-94)
(5) Engine hood (P.5-4)
(6) Headlight washer (if equipped) (P.2-92, 6-39)
(7) Door lock (P.2-2)
(8) Outside rearview mirror (P.2-22)
(9) Side turn signal light (P.2-93, 6-42)
(10) Parking sensor (P.3-110) (if equipped)
(11) Front turn signal light (P.2-93, 6-41)
(12) Headlight (P.2-82, 6-40)
(13) Position light (P.6-42)
(14) Front radar (DSBS II) (if equipped) (P.3-50)
(15) Frame (towing) hook (P.5-16)
(16) Front fog light (P.2-87, 6-43) / Daytime running light (D.R.L.) (if equipped) (P.2-82, 2-85)

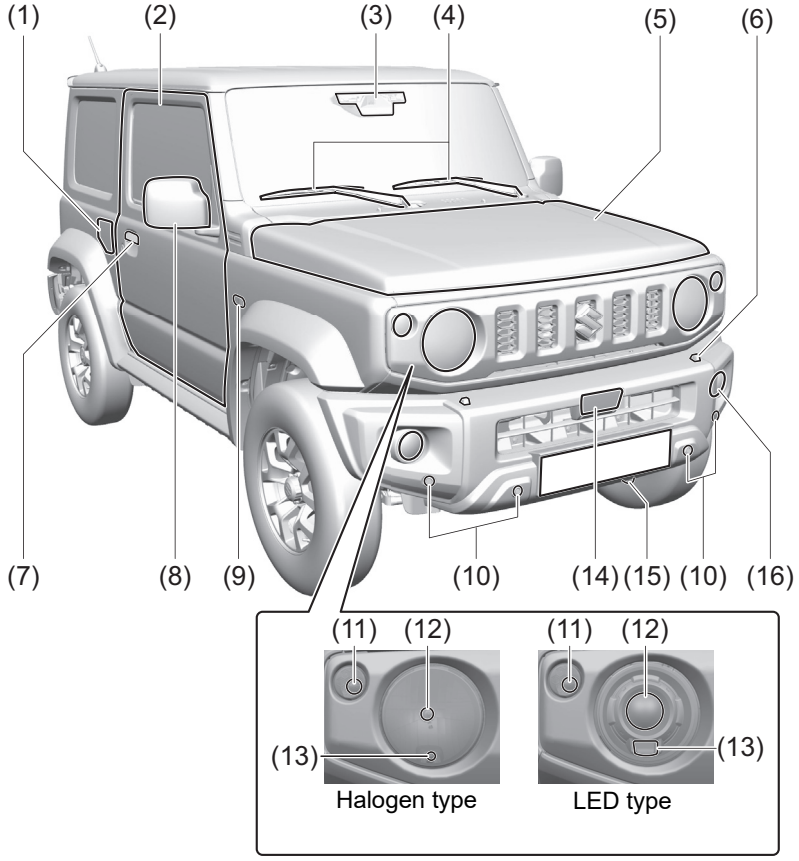

85U000010

EXTERIOR, REAR

(1) Tailgate (P.2-4)
(2) Rear window wiper (P.2-96)
(3) High-mount stop light (P.6-46)
(4) Radio antenna (P.5-32)
(5) Tail / brake light (P.6-45)
(6) Rear turn signal light (P.2-93, 6-45)
(7) Reversing light (P.6-45) / Rear fog light (if equipped) (P.6-45)
(8) Parking sensor (P.3-110)
(9) License plate light (P.2-82, 6-46)
(10) Rearview camera (if equipped) (P.3-116)
(11) Spare tyre (P.6-30)

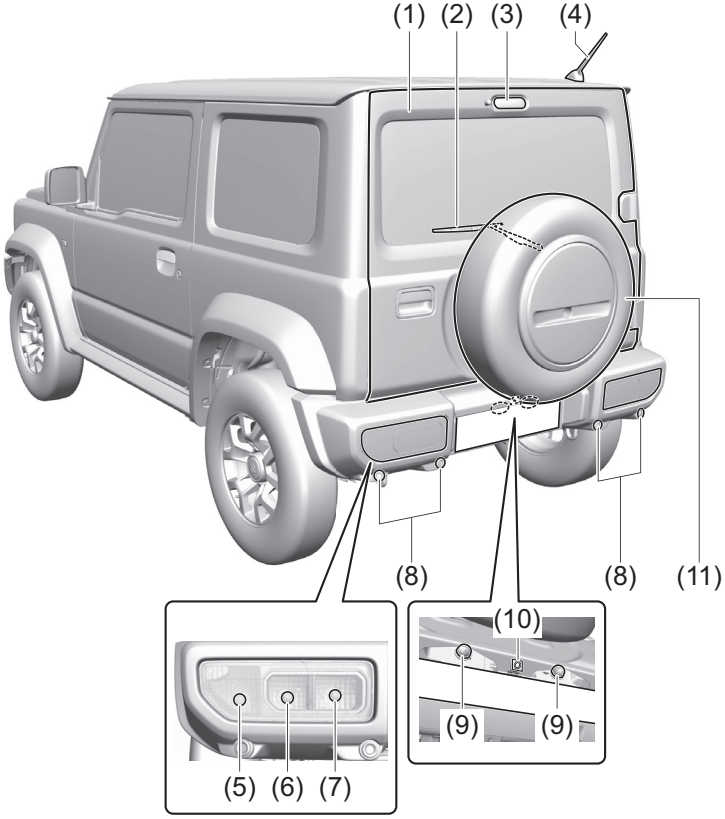

85U000020

INTERIOR, SIDE (Left hand drive vehicles)

(1) Inside rearview mirror (P.2-21)
(2) Front camera (DSBS II) (if equipped) (P.3-50)
(3) Sun visor (P.5-6)
(4) Front interior light (P.5-7, 6-47)
(5) Hands-free microphone (if equipped) (P.5-34)
(6) Warning label for front passenger's front airbag (P.1-32) *1, *2
(7) Side curtain airbag (P.1-37)
(8) Seat belt (P.1-10)
(9) Assist grip (P.5-10)
(10) Front seat (P.1-2)
(11) Side airbag (P.1-37)
(12) Front seat back pocket (P.5-13)

*1 Be sure to read the detailed information in the target page before using a child restraint system.
*2 NEVER use a rearward facing child restraint on a seat protected by an ACTIVE AIRBAG in front of it, DEATH or SERIOUS INJURY to the CHILD can occur.



72M00150

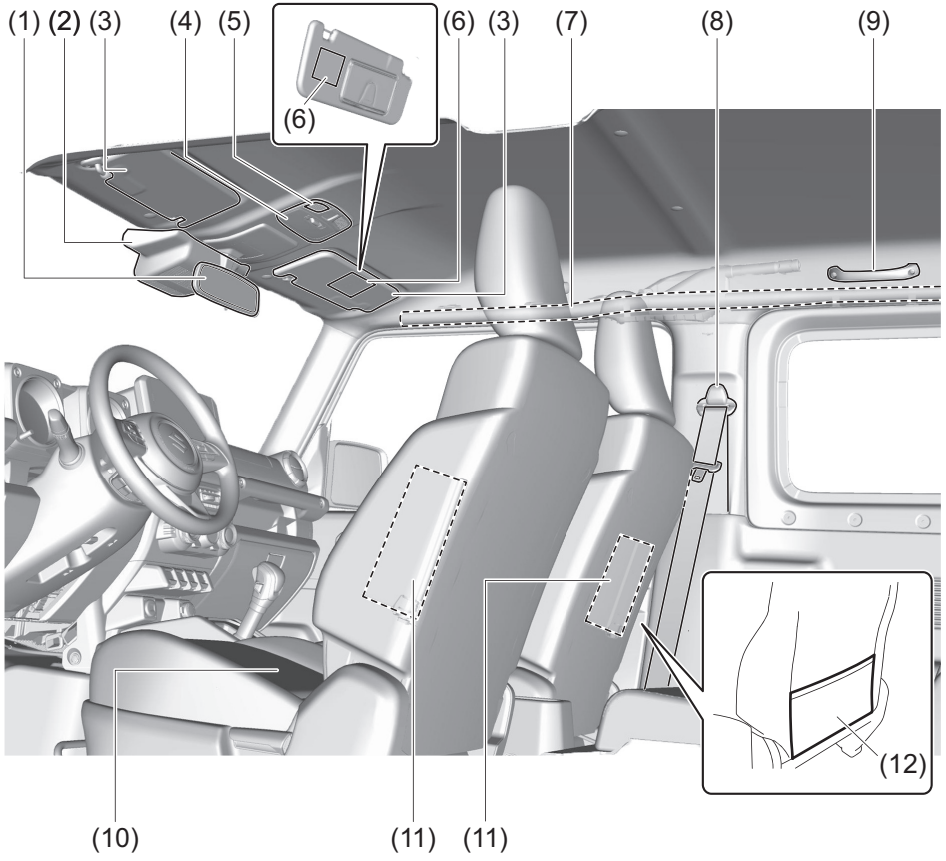

85U000030

INTERIOR, SIDE (Right hand drive vehicles)

(1) Inside rearview mirror (P.2-21)
(2) Front camera (DSBS II) (if equipped) (P.3-50)
(3) Sun visor (P.5-6)
(4) Warning label for front passenger's front airbag (P.1-32) *1, *2
(5) Hands-free microphone (if equipped) (P.5-34)
(6) Front interior light (P.5-7, 6-47)
(7) Side curtain airbag (P.1-37)
(8) Seat belt (P.1-10)
(9) Assist grip (P.5-10)
(10) Front seat (P.1-2)
(11) Side airbag (P.1-37)
(12) Front seat back pocket (P.5-13)

*1 Be sure to read the detailed information in the target page before using a child restraint system.
*2 NEVER use a rearward facing child restraint on a seat protected by an ACTIVE AIRBAG in front of it, DEATH or SERIOUS INJURY to the CHILD can occur.



72M00150

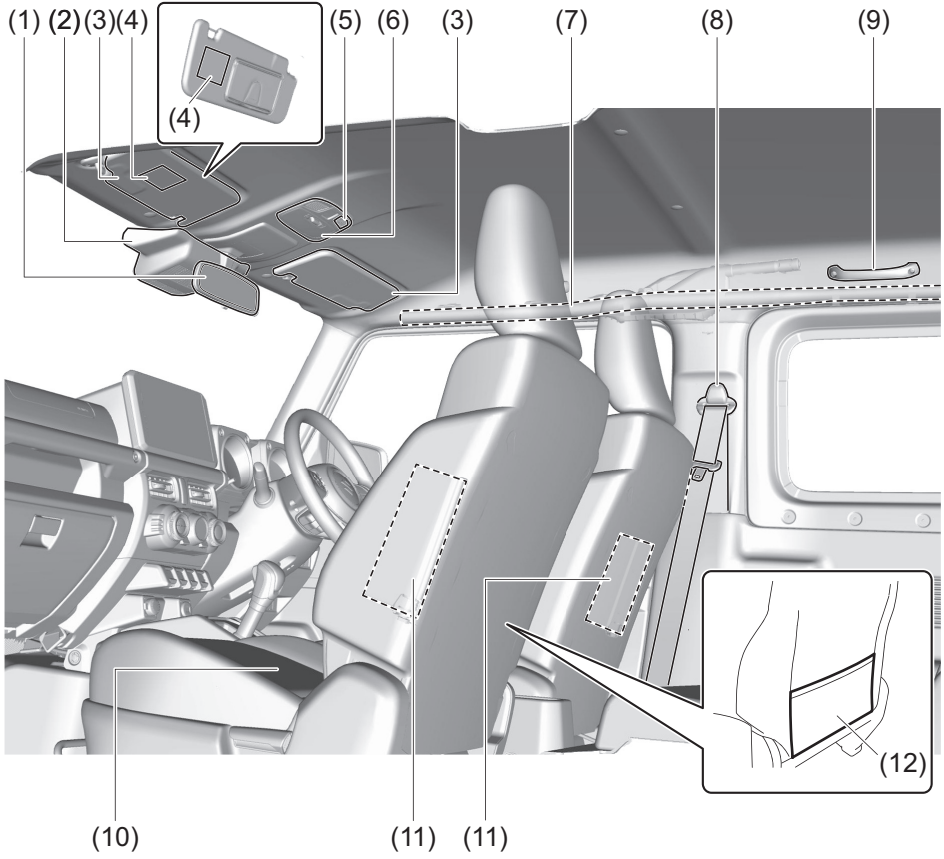

85U000040

INTERIOR, REAR

(1) Assist grips (P.5-10)
(2) Seat belt (P.1-7)
(3) Rear interior light (if equipped) (P.5-7, 6-47)
(4) Rear seat (P.1-5)
(5) Accessory socket (if equipped) (P.5-9)

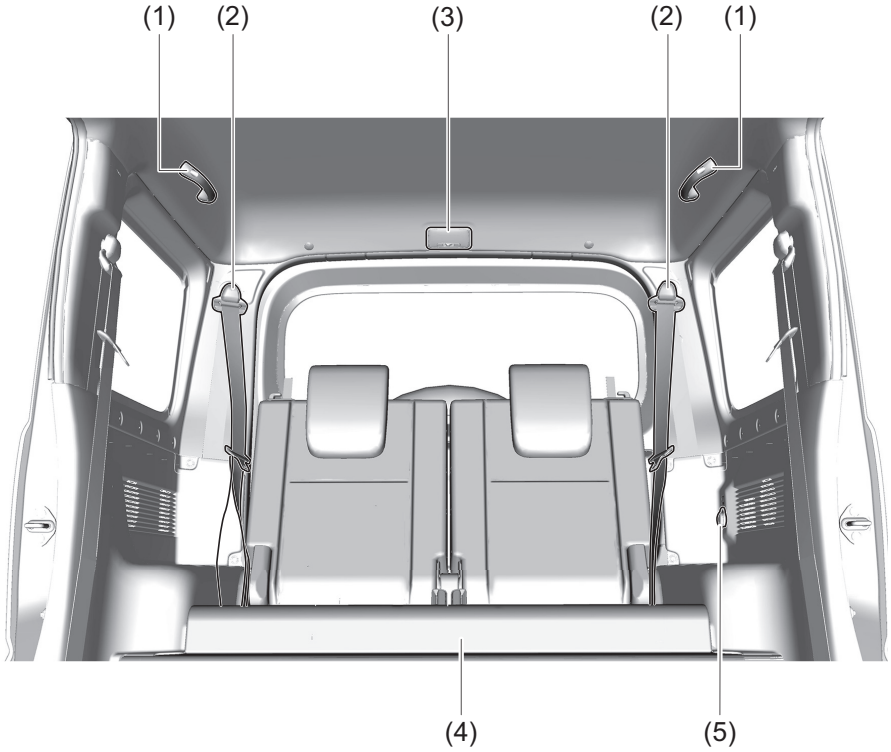

85U000070

INTERIOR, FRONT (Right hand drive vehicles)

(1) Glove box (P.5-11)
(2) Front passenger's front airbag (P.1-33)
(3) USB socket (if equipped) (P.5-10)
(4) Driver's front airbag (P.1-33)
(5) Engine hood release handle (P.5-4)
(6) Manual heating and air conditioning system (P.5-19)
(7) Automatic heating and air conditioning system (P.5-25)
(8) Accessory socket (P.5-9)
(9) Parking brake lever (P.3-7)
(10) Front seat heater switch (if equipped) (P.1-4)
(11) Transfer lever (P.3-40)
(12) Fuel lid opener lever (P.5-1)

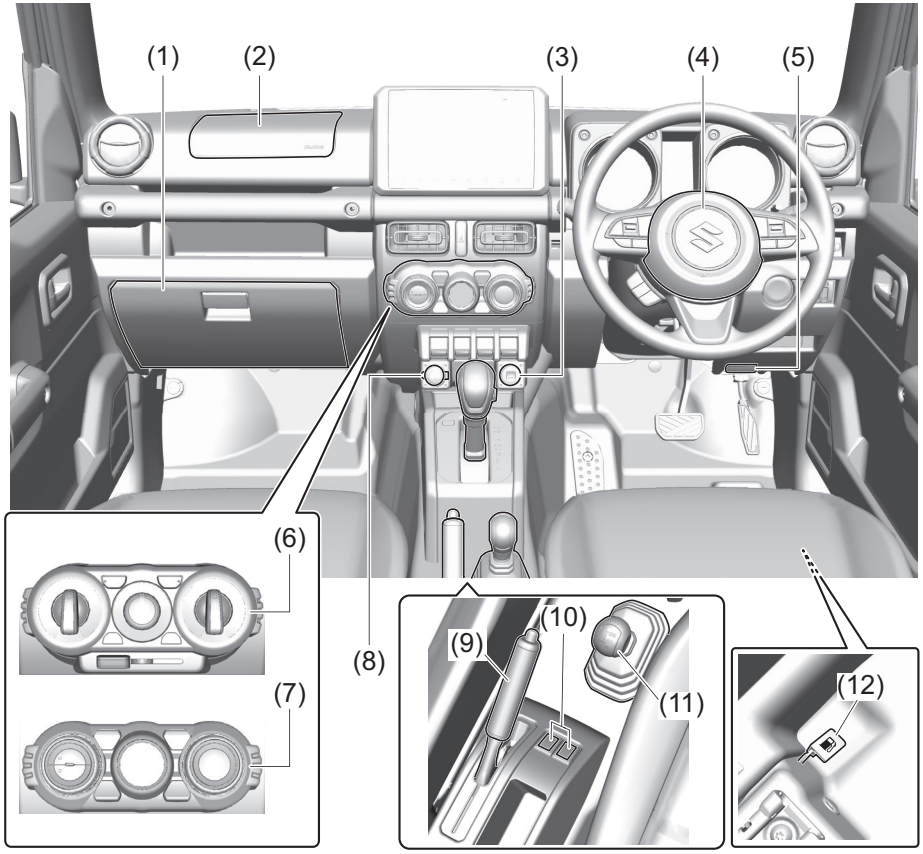

85U000060

INSTRUMENT PANEL 1 (Right hand drive vehicles)

(1) Heated rear window switch (Automatic heating and air conditioning system) (P.2-97)
(2) Heated rear window switch (Manual heating and air conditioning system) (P.2-97)
(3) Windshield wiper and washer lever (P.2-94) / Rear window wiper / Washer switch (P.2-96)
(4) Remote audio control (P.5-33)
(5) Hands-free switch (P.5-34)
(6) Instrument cluster (P.2-26)
(7) Adaptive cruise control switches (if equipped) (P.3-80)
(8) Lighting control lever (P.2-82) / Turn signal control lever (P.2-93)
(9) Ignition switch (if equipped) (P.3-3)
(10) Hazard warning switch (P.2-94)
(11) Tilt steering lock lever (P.2-97)
(12) Engine switch (if equipped) (P.3-5)

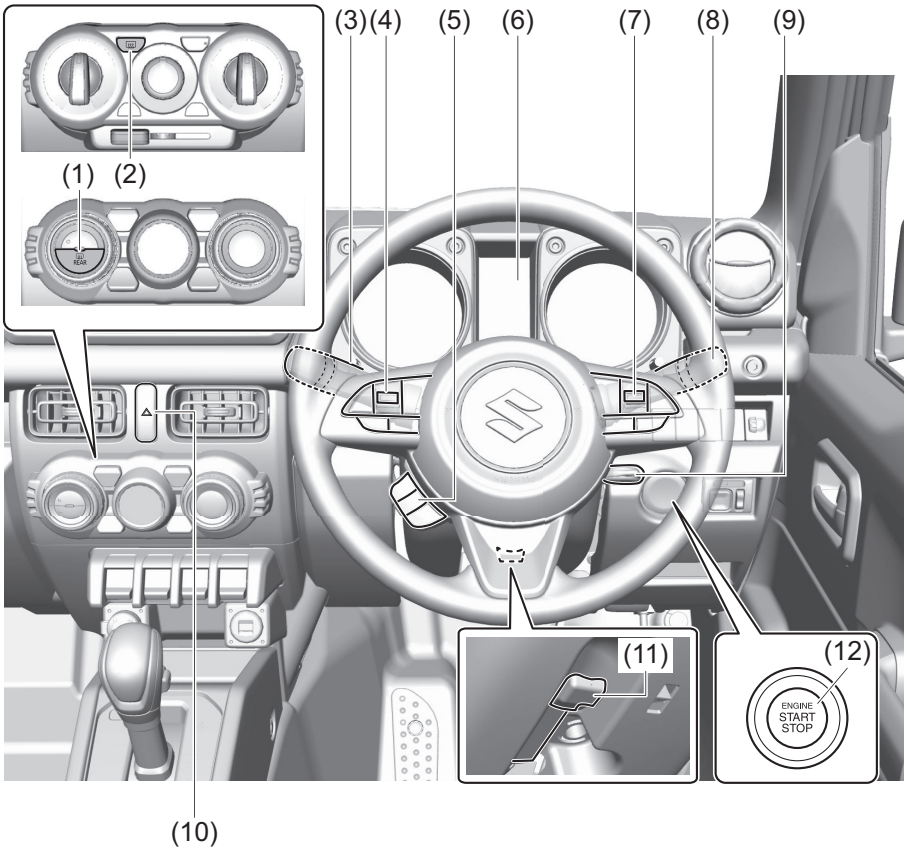

85U000090

INSTRUMENT PANEL 2 (Right hand drive vehicles)

(1) Lane departure prevention OFF switch (if equipped) (P.3-73)
(2) Idling stop system OFF switch (if equipped) (P.3-28)
(3) Parking sensor buzzer OFF switch (P.3-110)
(4) Headlight washer switch (if equipped) (P.2-92)
(5) Headlight leveling switch (if equipped) (P.2-92)
(6) Dual Sensor Brake Support II (DSBS II) OFF switch (if equipped) (P.3-59)
(7) Electric window control (Passenger's door) (P.2-19)
(8) ESP® OFF switch (P.3-129)
(9) Hill descent control switch (P.3-130)
(10) Electric window control (Driver's door) (P.2-19)
(11) Electric mirror control (P.2-22)

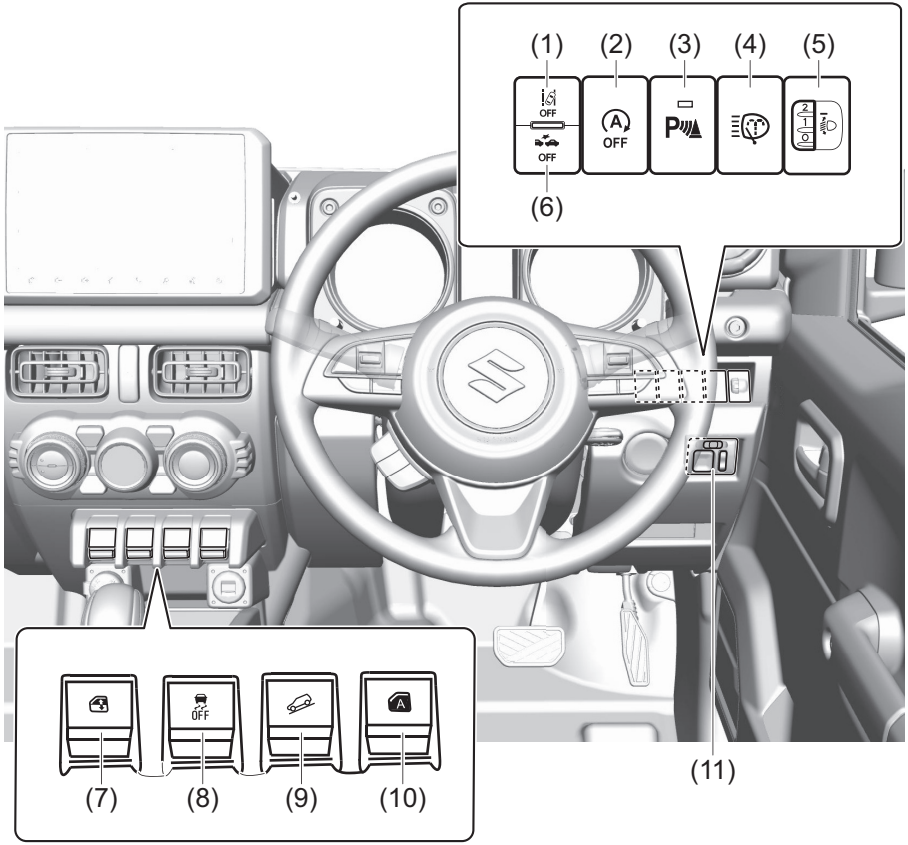

85U000110

LUGGAGE COMPARTMENT

(1) Luggage compartment carpet (P.5-15)
(2) Wheel wrench (P.7-1)
(3) Jack handle (P.7-1)
(4) Jack (P.7-1)
(5) Luggage box (if equipped) (P.5-14)

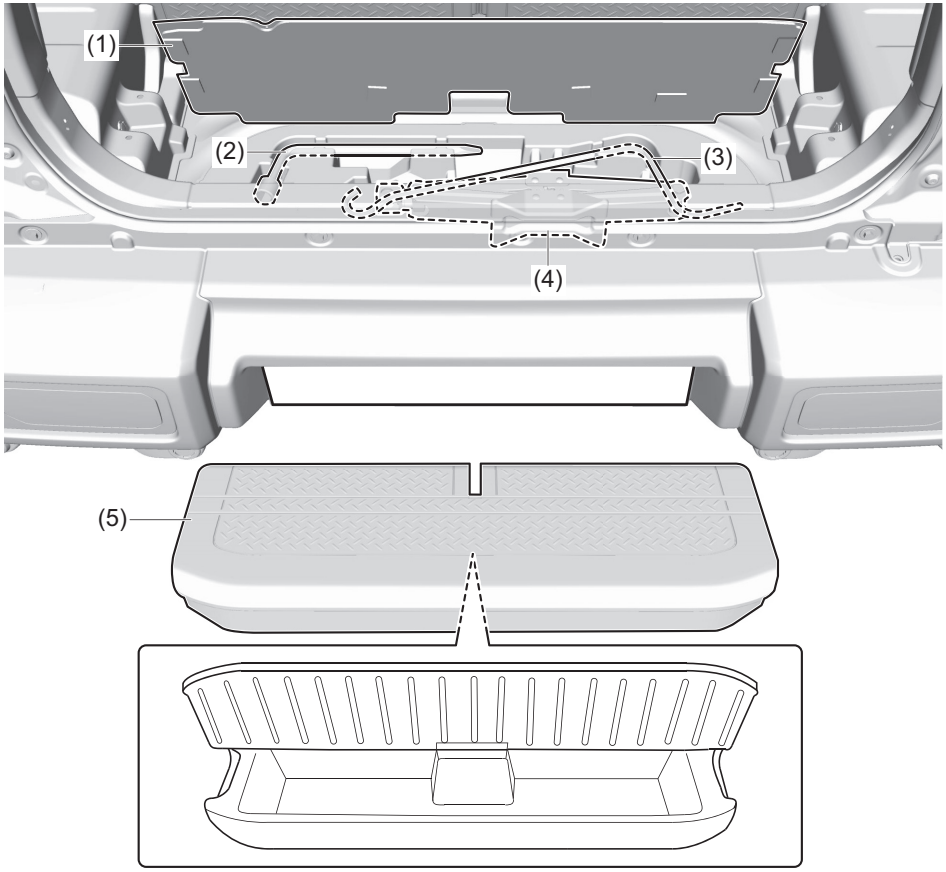

85U000120

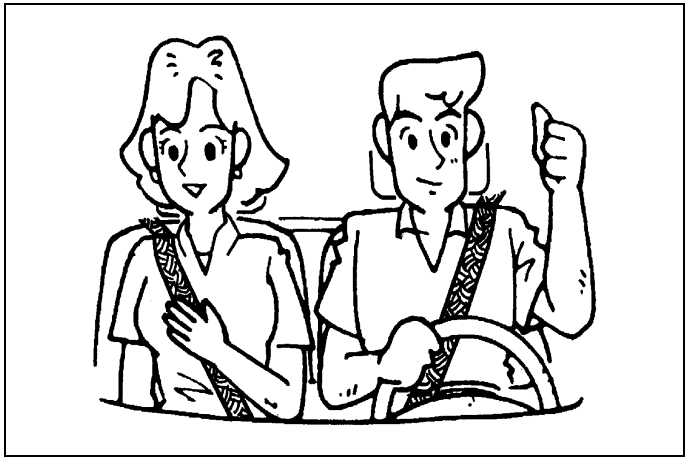

65D231S

FOR SAFE DRIVING

1

Floor mats (if equipped) 1-1
Front seats 1-2
Rear seats 1-5
Seat belts and child restraint systems 1-7
Child restraint system for countries applied for UN Regulation No.16 1-21
Supplemental restraint system (airbags) 1-31
Exhaust gas warning 1-43

Floor mats (if equipped)

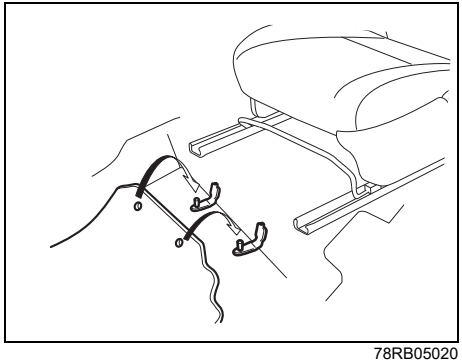

78RB05020

To prevent the driver's side floor mat from sliding forward and possibly interfering with the operation of the pedals, genuine SUZUKI floor mats are recommended.
Whenever you put the driver's side floor mat back in the vehicle after it has been removed, hook the floor mat grommets to the fasteners and position the floor mat properly in the footwell.

When you replace the floor mats in your vehicle with a different type such as all-weather floor mats, we highly recommend to use genuine SUZUKI floor mats for proper fitting.

⚠ WARNING

Failure to take the following precautions may result in the driver's side floor mat interfering with the pedals and causing a loss of vehicle control or an accident.

Description of warning label



- **Slid forward floor mat could interfere with the operation of the pedals and lead to unexpected accident.**



- **Check that the floor mat grommets are hooked to the fasteners.**



- **Never stack floor mats because it may prevent from securing to the fasteners and cause sliding forward.**



- **For more details, read this owner's manual.**

- **Never use a floor mat which does not fit the floor contours.**

Front seats

⚠ WARNING

Failure to take the following precautions may result in the driver's side floor mat interfering with the pedals and causing a loss of vehicle control or an accident.
- **Check that the floor mat grommets are hooked to the fasteners.**
- **Never place additional floor mats on top of the existing floor mat.**

Seat adjustment

⚠ WARNING

Never attempt to adjust the driver's seat or seatback while driving. The seat or seatback could move unexpectedly, causing loss of control. Check that the driver's seat and seatback are properly adjusted before you start driving.

⚠ WARNING

To avoid excessive seat belt slack, which reduces the effectiveness of the seat belts as a safety device, check that the seats are adjusted before the seat belts are fastened.

⚠ WARNING

All seatbacks should always be in an upright position when driving, or seat belt effectiveness may be reduced. Seat belts are designed to offer maximum protection when seatbacks are in the upright position.

⚠ WARNING

Do not place any object under the front seat. If an object becomes caught under the front seat, the following may occur.
- **The seat will not be latched.**

⚠ WARNING

Do not leave cigarette lighters or spray cans on the floor. If a cigarette lighter or spray can is on the floor, it may light accidentally when luggage is loaded or the seat is adjusted, causing a fire.

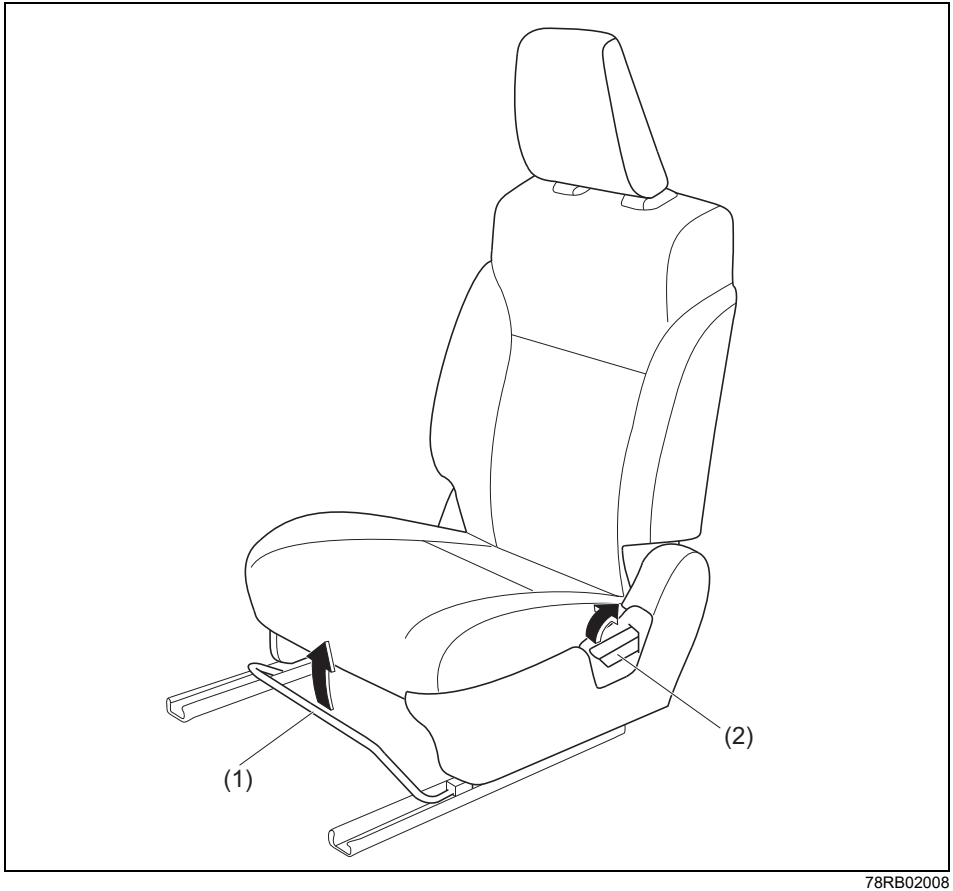

78RB02008

Seat position adjustment lever (1)
Pull the lever up and slide the seat.

Seatback angle adjustment lever (2)
Pull the lever up and move the seatback.

After adjustment, move the seat and seatback back and forth to check if it is securely latched.

Head restraints (Adjustable type)

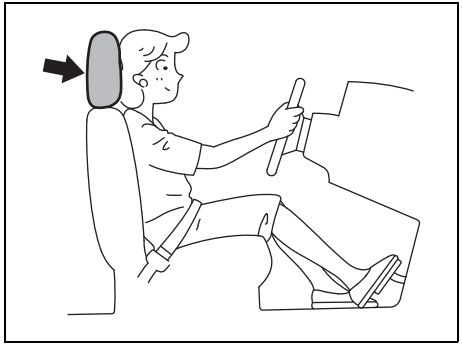

80J001

Head restraints are designed to help reduce the risk of neck injuries in the case of an accident. Adjust the head restraint to the position which places the center of the head restraint closest to the top of your ears. If this is not possible for very tall passengers, adjust the head restraint as high as possible.

⚠ WARNING

- **Never drive the vehicle with the head restraints removed.**
- **Do not attempt to adjust the head restraint while driving.**

NOTE:
It may be necessary to recline the seatback to provide enough overhead clearance to remove the head restraint.

Front

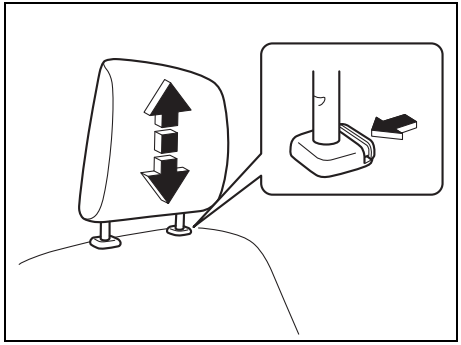

75RM004

To raise the front head restraint, pull upward the head restraint until it clicks. To lower the head restraint, push down the head restraint while holding in the lock lever. If a head restraint must be removed (for cleaning, replacement, etc.), push in the lock lever and pull the head restraint all the way out.

Front seat heater (if equipped)

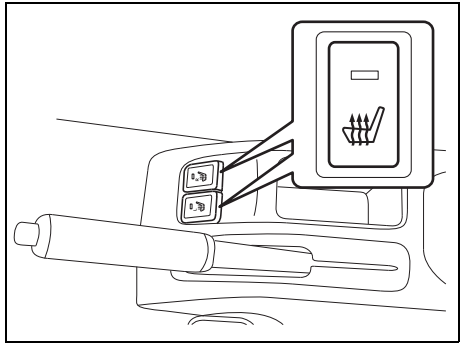

78RB02009

With the ignition switch is in “ON” position or press the engine switch to change the ignition mode to ON, push in one or both of the seat heater switch(es) to warm the corresponding seat(s). The indicator light in the switch will also come on. To turn off the seat heater, push in the switch again. The indicator light in the switch will go off.

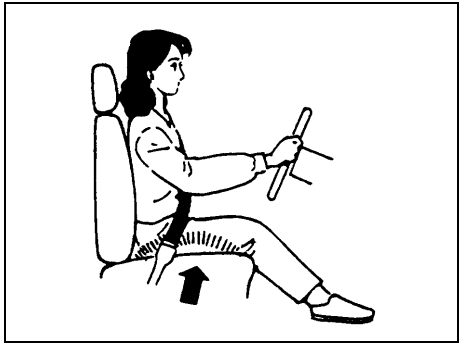

78RB02094

⚠ WARNING

Improperly using the seat heater can be hazardous. An occupant can suffer burns even if the heating temperature is fairly low, if the occupant is wearing thin pants, a thin skirt or shorts and leaves the heater on for long periods.
Avoid using the seat heater for these occupants:
- **People who have reduced feeling in their legs, including the elderly or those with certain disabilities.**
- **Small children, or anyone with sensitive skin.**
- **People who are asleep or under the influence of alcohol or other drugs which make them tired.**

NOTICE

To avoid damaging the heater element:
- **Do not subject the front seats to heavy impacts, such as children jumping on them.**
- **Do not cover the seat with any insulating materials such as blankets or cushions.**

NOTE:
The heater does not stop automatically while the ignition switch is in "ON" position orthe ignition mode is ON. If you do not turn it off, it will continue to operate.

Rear seats

Head restraints

Head restraints are designed to help reduce the risk of neck injuries in the case of an accident.

⚠ WARNING

- **Never drive the vehicle with the head restraints removed.**
- **Do not attempt to adjust the head restraint while driving.**

NOTE:
It may be necessary to fold forward the seatback to provide enough overhead clearance to remove the head restraint.

Adjust the head restraint to the position which places the center of the head restraint closest to the top of your ears. If this is not possible for very tall passengers, adjust the head restraint as high as possible.

Rear

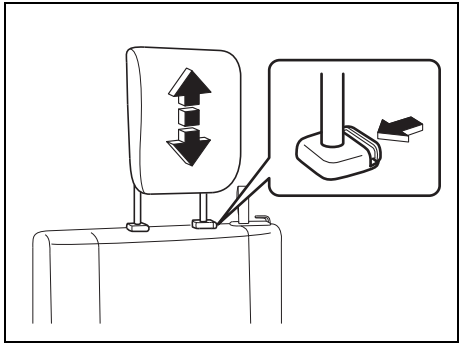

78RB02010

To raise the rear head restraint, pull upward the head restraint until it clicks. To lower the head restraint, push down the head restraint while holding in the lock lever. If a head restraint must be removed (for cleaning, replacement, etc.), push in the lock lever and pull the head restraint all the way out.

When installing a child restraint system, adjust the height of the head restraint or remove it for fitting the child restraint, as necessary.

Folding rear seats

⚠ CAUTION

Remove objects from the rear seats before folding the rear seats. There may be a case that the rear seat belt reminder will not be activated, if objects are remained on the rear seats.

The rear seats of your vehicle can be folded forward to provide additional cargo space.

To fold the rear seats forward:

1) Lower the head restraint fully.

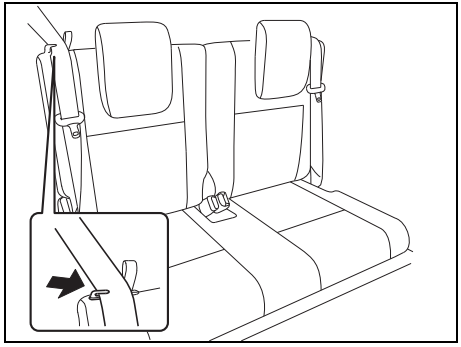

78RB02011

2) Hook the webbing of the outboard lap-shoulder belts in the seat belt guides.

NOTICE

- **Make sure the belt webbing is not twisted.**
- **When you move a seatback, make sure the belt webbing is hooked in the seat belt guides so the seat belts are not caught by the seat-back, seat hinge, or seat latch. This helps prevent damage to the belt system.**

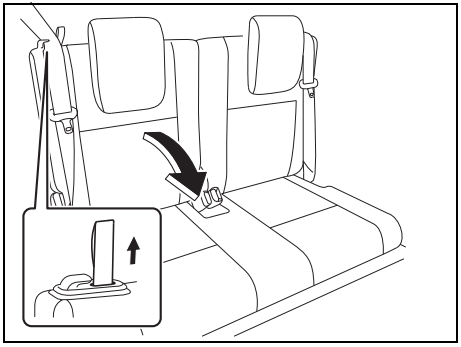

78RB02012

3) For the split seat, pull the release strap on the top of each split seat, and fold the seatbacks forward. For the bench seat, pull the both release straps on the top of the bench seat together, and fold the seatback forward.

⚠ WARNING

If you need to carry cargo in the passenger compartment with the rear seatback folded forward, secure the cargo or it may be thrown about, causing injury. Never pile cargo higher than the seatbacks.

To return the seat to the normal position, follow the procedure below.

NOTICE

When returning the rear seatback to the normal position, check that there is nothing around the striker. Any foreign materials prevent the seatback from being locked securely.

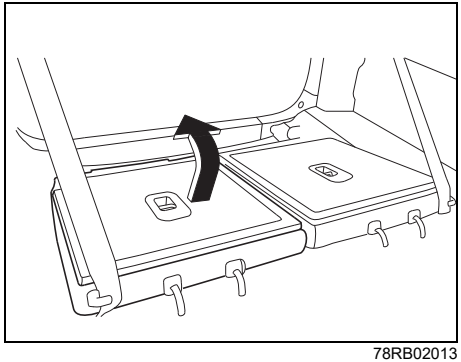

78RB02013

Raise the seatback until it locks into place.

After returning the seat, move the seatback back and forth to check if it is securely latched.

NOTICE

When returning the rear seatback to the normal position, handle it carefully by hand to avoid any damage to the lock itself. Do not push it by using some material or by applying excessive force.

Seat belts and child restraint systems

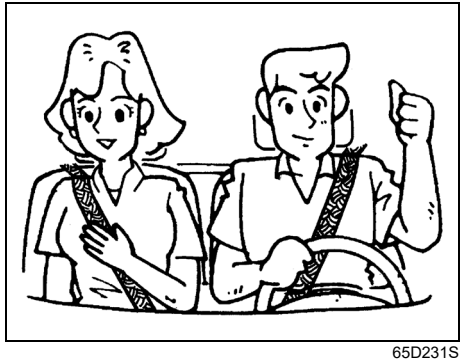

65D231S

⚠ WARNING

Wear your seat belts at all times.

⚠ WARNING

An airbag supplements or adds to the frontal collision protection offered by seat belts. The driver and all passengers must be properly restrained by wearing seat belts at all times, whether or not an airbag is mounted at their seating position, to minimize the risk of severe injury or death in the event of a collision.

⚠ WARNING

Do not modify, remove, disassemble seat belts. Doing so may prevent them from functioning properly and cause the risk of severe injury or death in the event of a collision.

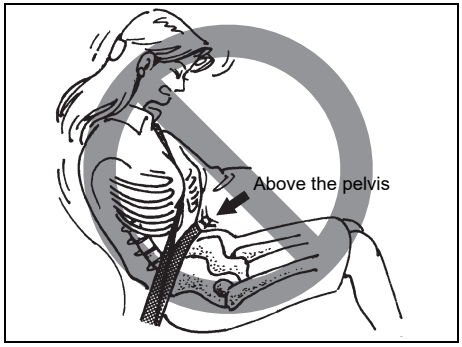

65D606

⚠ WARNING

- **Never allow persons to ride in the cargo area of a vehicle. In the event of an accident, there is a much greater risk of injury for persons who are not riding in a seat with their seat belt securely fastened.**
- **Seat belts should always be adjusted as follows:**
  - **– the lap portion of the belt should be worn low across the pelvis, not across the waist.**
  - **– the shoulder straps should be worn on the outside shoulder only, and never under the arm.**
  - **– the shoulder straps should be away from your face and neck, but not falling off your shoulder.**

(Continued)

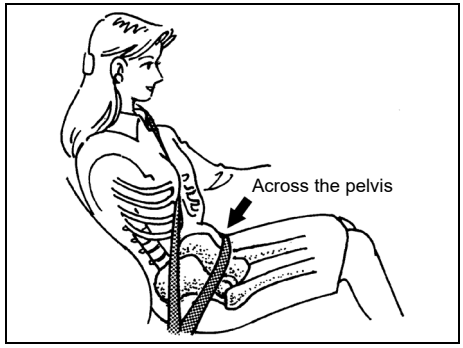

65D201

⚠ WARNING

(Continued)

- **Seat belts should never be worn with the straps twisted and should be adjusted as tightly as is comfortable to provide the protection for which they have been designed. A slack belt will provide less protection than a snug belt.**
- **Check that each seat belt latch plate (tongue) is inserted into the proper buckle catch. It is possible to cross the buckles in the rear seat.**

(Continued)

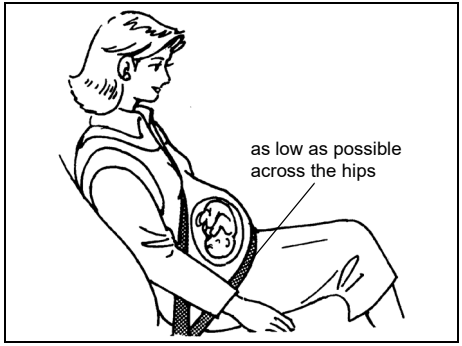

65D199



65D609

⚠ WARNING

(Continued)

- **Pregnant women should use seat belts, although specific recommendations about driving should be made by the woman's medical advisor. Remember that the lap portion of the belt should be worn as low as possible across the hips, as shown in the illustration.**
- **Do not fasten your seat belt over hard or breakable objects in your pockets or on your clothing. If an accident occurs, objects such as glasses, pens, etc. under the seat belt can cause injury.**

(Continued)

⚠ WARNING

(Continued)

- **Do not hold a child on a passenger's lap. Even if the passenger holds the child tightly, he/she would not be supported enough in the event of an accident and it could result in a serious injury of the child.**
- **Never use the same seat belt for more than one occupant and never attach a seat belt over an infant or child being held on an occupant's lap. Such seat belt use could cause serious injury in the event of an accident.**

(Continued)

⚠ WARNING

(Continued)

- **Periodically inspect seat belt assemblies for excessive wear and damage. Seat belts should be replaced if webbing becomes frayed, contaminated or damaged in any way. It is essential to replace the entire seat belt assembly after it has been worn in a severe impact, even if damage to the assembly is not obvious.**
- **Children aged 12 and under should ride properly restrained in the rear seat.**
- **Infants and small children should never be transported unless they are properly restrained. Restraint systems for infants and small children can be purchased locally and should be used. Check that the system you purchase meets applicable safety standards. Read and follow all the directions provided by the manufacturer.**
- **For child, if the seat belt irritates the neck or face, use a child restraint system appropriately for the child. The seat belts of your vehicle are principally designed for persons of adult size.**

(Continued)

⚠ WARNING

(Continued)

- **Avoid contamination of seat belt webbing by polishes, oils, chemicals, and particularly battery acid. Cleaning may safely be carried out using mild soap and water.**
- **Do not insert any items such as coins and clips into the seat belt buckles, and be careful not to spill liquids into these parts. If foreign materials get into a seat belt buckle, the seat belt may not work properly.**
- **All seatbacks should always be in an upright position when driving, or seat belt effectiveness may be reduced. Seat belts are designed to offer maximum protection when seatbacks are in the upright position.**

Lap-shoulder belt

Emergency Locking Retractor (ELR)

The seat belt has an emergency locking retractor (ELR), which is designed to lock the seat belt only during a sudden stop or impact. It also may lock if you pull the belt across your body very quickly. If this happens, let the belt go back to unlock it, and then pull the belt across your body more slowly.

Safety reminder

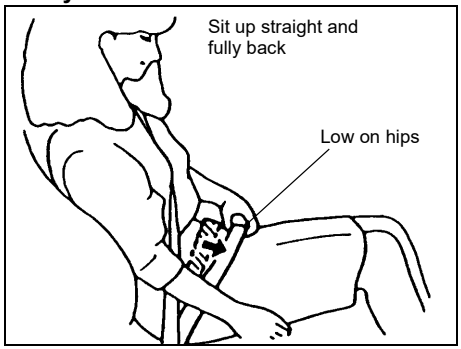

60A038

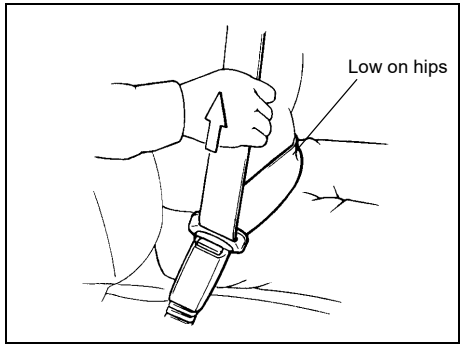

60A040

To reduce the risk of sliding under the belt during a collision, position the lap portion of the belt across your lap as low on your hips as possible and adjust it to a snug fit by pulling the shoulder portion of the belt upward through the latch plate. The length of the diagonal shoulder strap adjusts itself to allow freedom of movement.

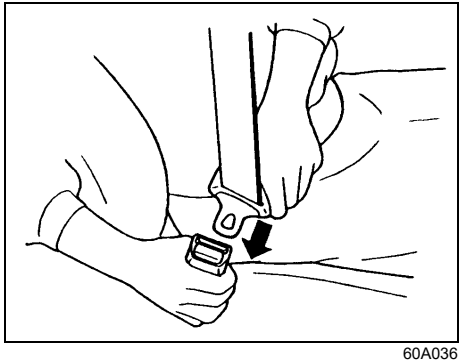

60A036

To fasten the seat belt, sit up straight and far back into the seat, pull the latch plate attached to the seat belt across your body and press it straight into the buckle until you hear a click. After pressing the latch plate into the buckle, pull the seat belt to make sure it is securely latched.

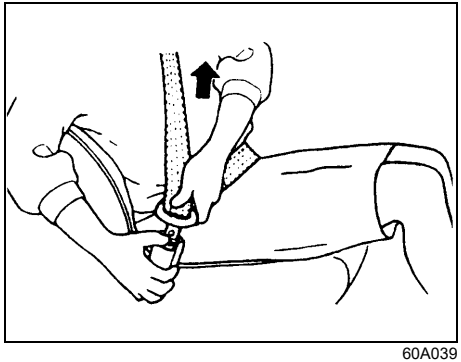

60A039

To unfasten the seat belt, push the red “PRESS” button on the buckle and retract the belt slowly while holding the belt or/and the latch plate.

Lap-shoulder belt with detachable connector (if equipped)

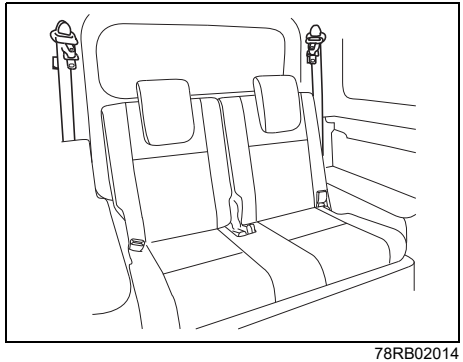

78RB02014

The rear lap-shoulder belt has a buckle, a latch plate and a detachable connector. The rear seat belt buckle and the connector are designed so as not to allow a wrong latch plate to be inserted.

When the rear seatback is in the upright position, keep the detachable connector latched. Only when the rear seatback is folded down, unlatch the detachable connector. To latch and unlatch the connector, refer to “Unlatching and latching detachable connector” in this section.

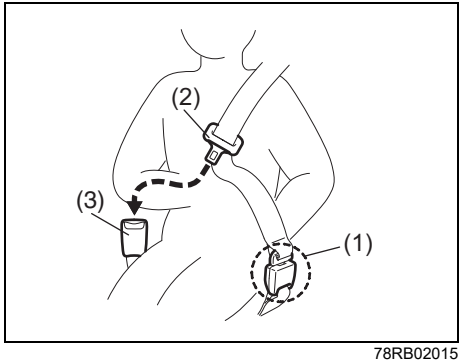

78RB02015

Fastening

Before fastening the rear lap-shoulder belt, check the following precautions.

- The detachable connector (1) is securely latched.
- The webbing is not twisted.
- The rear lap-shoulder belt is not put through the seat belt guide.

To fasten the belt, sit up straight and far back into the seat, pull the latch plate (2) across your body and press it straight into the buckle (3) until you hear a click. After pressing the latch plate into the buckle, pull the seat belt to make sure it is securely latched.

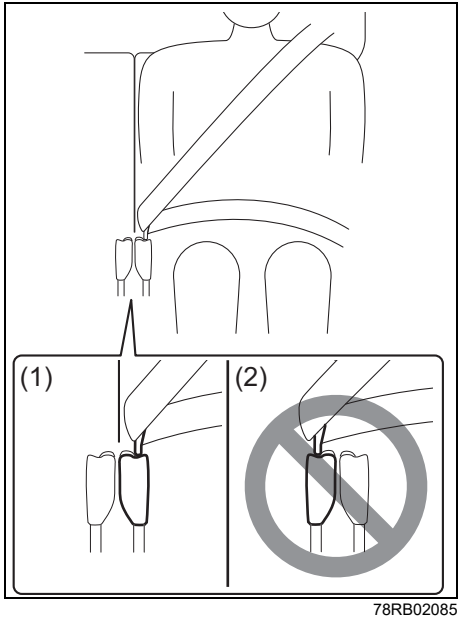

78RB02085

(1) Correct
(2) Wrong

⚠ WARNING

When fastening the rear seat belt, always use the closest buckle to you. If you use the buckle for your next rear seat position by mistake, the rear seat belt may not function properly.

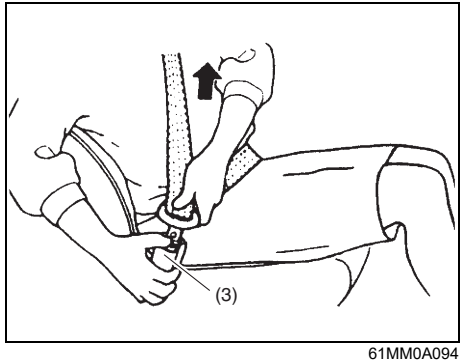

61MM0A094

Unfastening
To unfasten the seat belt, push the button on the buckle (3) and retract the belt slowly while attaching a hand to the belt or/and the latch plate.

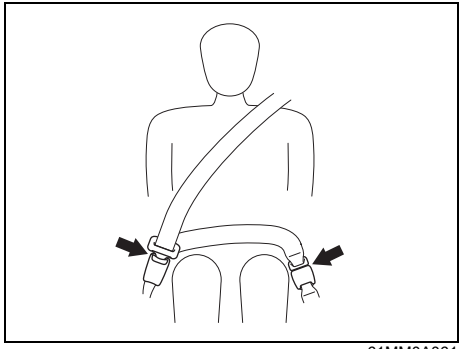

61MM0A061

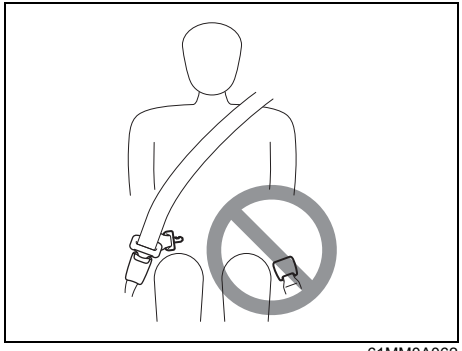

61MM0A062

⚠ WARNING

To minimize risk of severe injury or death in the event of a collision, always fasten seat belt with both latches buckled.

Unlatching and latching detachable connector

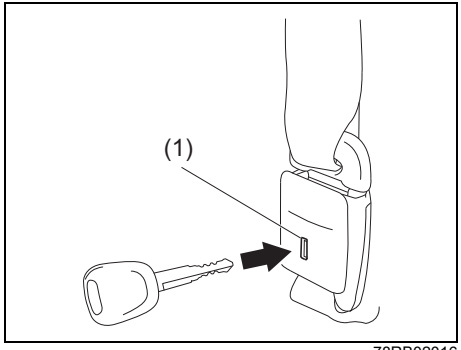

78RB02016

Unlatching
To unlatch the connector:
1) Insert a key into the slot (1) on the connector and allow the belt to retract.
2) Once the belt has completely retracted, stow the belt in the holder. Refer to “Stowing rear lap-shoulder belt” for details in this section.

Latching
To latch the connector:
1) Pull the belt out from the holder.

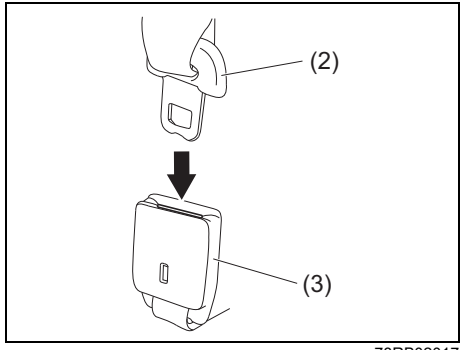

78RB02017

2) Insert the connector latch plate (2) into the connector (3).

⚠ WARNING

Check that the detachable connector is securely latched and the webbing is not twisted.

Stowing rear lap-shoulder belt
Stow the belt after it is retracted completely.

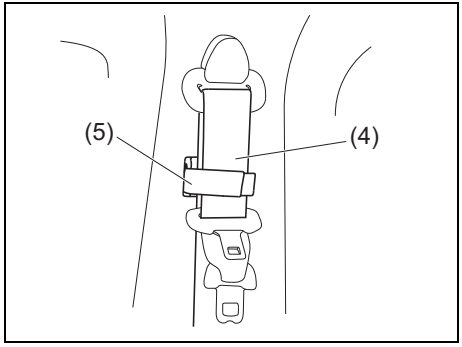

78RB02018

Bind the seat belt (4) with band (5).

Seat belt reminder

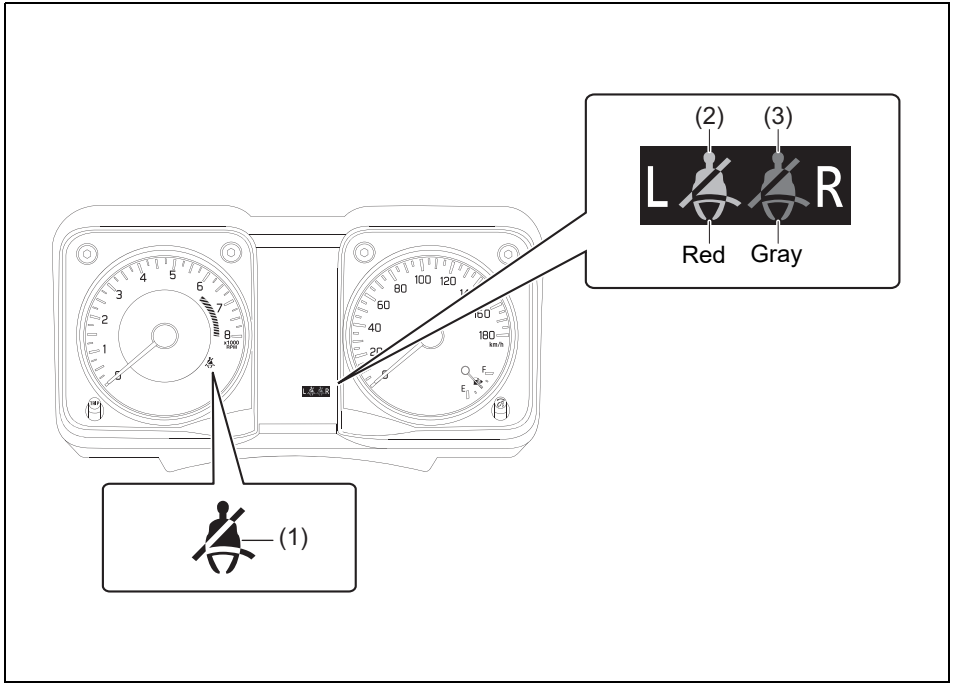

85U010010

(1) Driver's seat belt reminder light / front passenger's seat belt reminder light
(2) Rear passenger's seat belt reminder light (rear left)*1
(3) Rear passenger's seat belt reminder light (rear right)*2

*1 This symbol represents that the seat belt is unfastened.
*2 This symbol represents that the seat belt is fastened.

When the driver and/or passenger(s) do not fasten their seat belts, the seat belt reminder lights will come on or blink and a buzzer will sound to remind the driver and/or passenger(s) to fasten their seat belts. For more details, refer to the explanation below.

⚠ WARNING

It is absolutely essential that the driver and passengers fasten their seat belts at all times. Persons who are not fastening seat belts have a much greater risk of injury if an accident occurs. Make a regular habit of buckling your seat belt before putting the key in the ignition or pressing the engine switch.

Driver's seat belt reminder

If the driver's seat belt remains unbuckled when the ignition switch is turned to "ON" position, the reminder works as follows:

1) The driver's seat belt reminder light will come on. The front passenger's seat belt reminder light will also come on if a front passenger does not fasten his/her seat belt.
2) After the vehicle's speed has reached about 15 km/h, the driver's seat belt reminder light will blink and a buzzer will sound for about 95 seconds.
3) The reminder light will remain on until the driver's seat belt is buckled.

If the driver has buckled his or her seat belt and later unbuckles the seat belt, the reminder system will be activated from Step 1) or 2) according to the vehicle's speed. When the vehicle's speed is less than 15 km/h (9 mph), the reminder will start from Step 1). When the vehicle's speed is more than 15 km/h (9 mph), the reminder will start from Step 2).

The reminder will be automatically canceled when the driver's seat belt is buckled or the ignition switch is turned to "LOCK" position, or the engine switch is pressed to change the ignition mode to LOCK (OFF).

Front passenger's seat belt reminder

If there is a person sitting in the front passenger seat and the front passenger seat belt is unbuckled when the ignition switch is turned to "ON" position or the engine switch is pressed to change the ignition mode to ON, the front passenger's seat belt reminder will activate. The front passenger's seat belt reminder works in the same manner as the driver's seat belt reminder.

NOTICE

The sensor of the front passenger's seat belt reminder is located in the seat cushion. Therefore, if you spill liquid such as liquid aromatics, soft drinks or juice on the front passenger's seat cushion, immediately wipe it dry with a soft cloth. Otherwise, the sensor of the front passenger's seat belt reminder can be damaged.

NOTE:

- *If you put an object on the passenger's seat, the weight of the object will be sensed by the sensor and the front passenger's seat belt reminder light (if equipped) will come on and then the interior buzzer may beep.*
- *If a child or a small sized person sit on the front passenger's seat or the cushion is put on the front passenger's seat, the weight will not be sensed by the sensor and the interior buzzer may not beep.*

Rear passenger's seat belt reminder

If there is a person sitting in the rear passenger seat and the rear passenger seat belt is unbuckled when the ignition switch is turned to "ON" position or the engine switch is pressed to change the ignition mode to ON, the rear passenger's seat belt reminder will activate. The rear passenger's seat belt reminder works in the same manner as the driver's seat belt reminder.

NOTICE

The sensor of the rear passenger's seat belt reminder is located in the seat cushion. Therefore, if you spill liquid such as liquid aromatics, soft drinks or juice on the rear passenger's seat cushion, immediately wipe it dry with a soft cloth. Otherwise, the sensor of the rear passenger's seat belt reminder can be damaged.

NOTE:

- *If you put an object on the rear passenger's seat, the weight of the object will be sensed by the sensor and the rear passenger's seat belt reminder light (if equipped) will come on and then the interior buzzer may beep.*
- *If a child or a small sized person sit on the rear passenger's seat or the cushion is put on the rear passenger's seat, the weight will not be sensed by the sensor and the interior buzzer may not beep.*

Seat belt guide

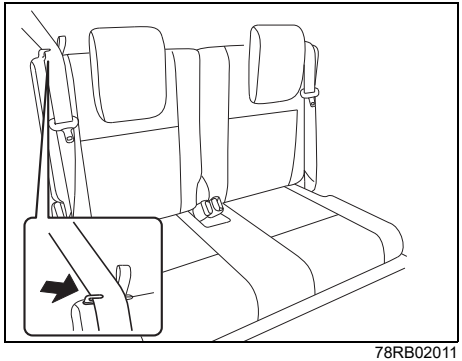

78RB02011

NOTICE

When you move a seatback, make sure the belt webbing is hooked in the seat belt guides so the seat belts are not caught by the seatback, seat hinge, or seat latch. This helps prevent damage to the belt system.

Seat belt inspection

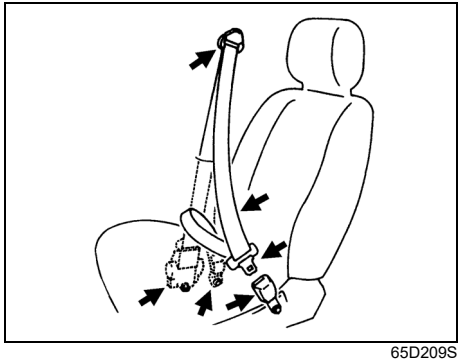

65D209S

Periodically check if the seat belts work properly and are not damaged. Check the webbing, buckles, latch plates, retractors, anchorages and guide loops. Replace any seat belts which do not work properly or are damaged.

⚠ WARNING

Inspect all seat belt assemblies after any collision. Any seat belt assembly which was in use during a collision (other than a very minor one) should be replaced, even if damage to the assembly is not obvious. Any seat belt assembly which was not in use during a collision must be replaced if the airbags and the seat belt pretensioners activated. The airbags, the pretensioners and the load limitter will only function once. In case they did not activate, consult with an authorized Suzuki dealer or a qualified workshop.

Seat belt pretensioner system

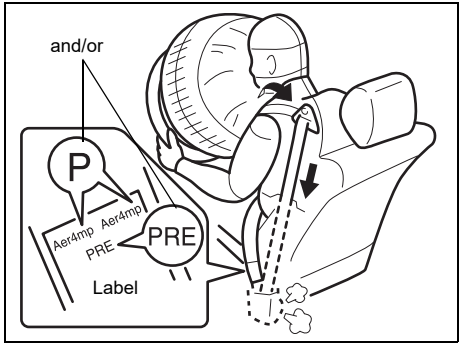

63J269

⚠ WARNING

This section describes your SUZUKI vehicle's seat belt pretensioner system. Read and follow all these instructions carefully to minimize your risk of severe injury or death.

To determine if your vehicle is equipped with a seat belt pretensioner system at the front or rear seating positions, check the label on the seat belt at the bottom part. If the letters "p" and/or "PRE" appear as illustrated, your vehicle is equipped with the seat belt pretensioner system. You can use the pretensioner seat belts in the same manner as ordinary seat belts.
Read this section and "Supplemental restraint system (airbags)" section to learn more about the pretensioner system.

The seat belt pretensioner system works with the supplemental restraint system (airbags). The crash sensors and the electronic controller of the airbag system also control the seat belt pretensioners. The pretensioners are triggered only when there is a frontal or side collision severe enough to trigger the airbags and the seat belts are fastened. For precautions and general information including servicing the pretensioner system, refer to "Supplemental restraint system (airbags)" section in addition to this "Seat belt pretensioner system" section, and follow all those precautions.

The pretensioner is located in each front seat belt retractor and each rear seat belt retractor in outboard seating position. The pretensioner tightens the seat belt so the belt fits the occupant's body more snugly in the event of a frontal or side collision. The retractors will remain locked after the pretensioners are activated. Upon activation, some noise will occur and some smoke may be released. These conditions are not harmful and do not indicate a fire in the vehicle.

The driver and all passengers must be properly restrained by fastening seat belts at all times, whether or not a pretensioner is equipped at their seating position, to minimize the risk of severe injury or death in the event of a collision.

Sit fully back in the seat; sit up straight; do not lean forward or sideways. Adjust the belt so the lap portion of the belt is worn low across the pelvis, not across the waist. Please refer to "Seat adjustment" section and the instructions and precautions about the seat belts in this "Seat belts and child restraint systems" section for details on proper seat and seat belt adjustments.

Please note that the pretensioners along with the airbags will activate in severe frontal or side collisions. They are not designed to activate in rear impacts, rollovers, or minor frontal side collisions. The pretensioners can be activated only once. If the pretensioners are activated (that is, if the airbags are activated), have the pretensioner system serviced by an authorized SUZUKI dealer or a qualified workshop as soon as possible.

If AIRBAG light on the instrument cluster does not blink or come on briefly when the ignition switch is turned to “ON” position or the ignition mode is changed to ON, stays on for more than 10 seconds, or comes on while driving, the pretensioner system or the airbag system may not work properly. Have both systems inspected by an authorized SUZUKI dealer or a qualified workshop as soon as possible.

Service on or around the pretensioner system components or wiring must be performed only by an authorized SUZUKI dealer or a qualified workshop who is specially trained. Improper service could result in unintended activation of pretensioners or could render the pretensioner inoperative. Either of these two conditions may result in personal injury.

To prevent damage or unintended activation of the pretensioners, check that the lead-acid battery is disconnected and the ignition switch has been in “LOCK” position or the ignition mode has been in LOCK (OFF) for at least 90 seconds before performing any electrical service work on your SUZUKI vehicle.

Do not touch pretensioner system components or wiring. The wires are wrapped with yellow tape or yellow tubing, and the couplers are yellow. When scrapping your SUZUKI vehicle, ask an authorized SUZUKI dealer, body repair shop, or scrap yard for assistance.

Seat belt force limiter system

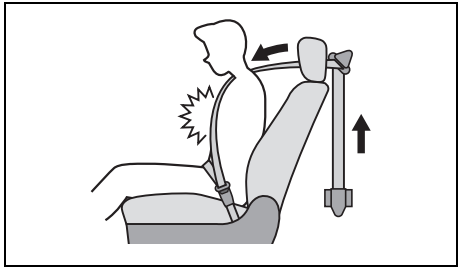

69RHS167

Front seat
In the event of a strong impact coming from the front, the seat belt force limiter operates in two stages to reduce a force to the shoulder strap, thus lessening the impact being sustained by the front passengers.

Rear seat
In the event of a strong impact coming from the front, the seat belt force limiter operate to reduce a force to the shoulder strap, thus lessening the impact being sustained by the rear passengers.

⚠ WARNING

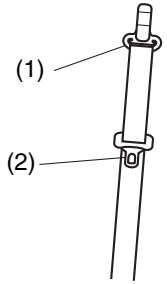

82K179

If the seat belt sustains strong impact, the resin of the shoulder anchor part (1) and the tongue plate part (2) could soften due to heavy friction, thus sticking to the seat belt, making the belt slide less easily. In such a case, the seat belt may not provide the best performance, resulting in severe injury in case of emergency. Have the seat belt replaced by an authorized SUZUKI dealer or a qualified workshop.

Child restraint systems

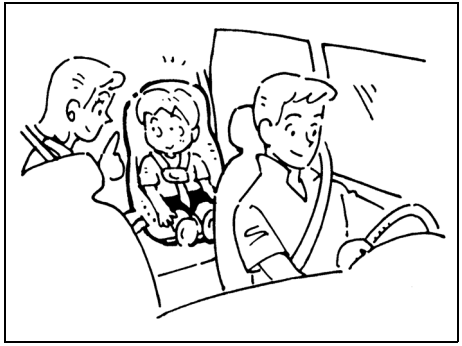

60G332S

The following types of child restraint system are available generally.

Infant restraint

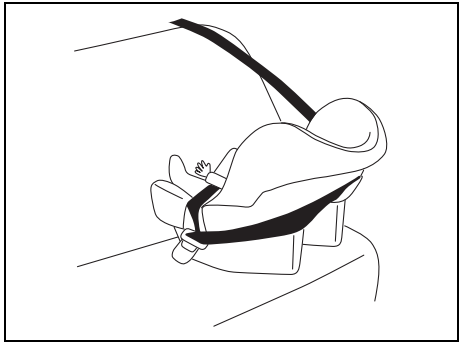

80JC007

Child restraint

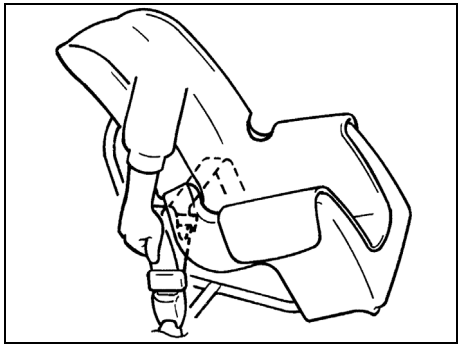

80JC016

Booster seat

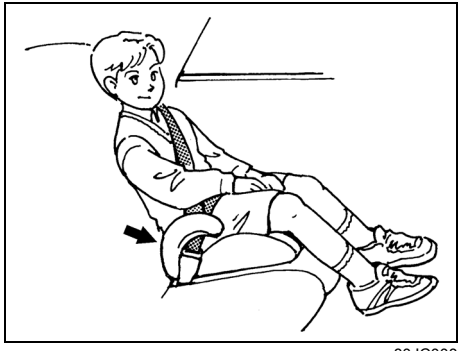

80JC008

SUZUKI highly recommends that you use a child restraint system to restrain infants and small children. Many different types of child restraint systems are available; check that the restraint system you select meets applicable safety standards.

All child restraint systems are designed to be secured in vehicle seats either by seat belts (lap belts or the lap portion of lap-shoulder belts) or by special rigid lower anchor bars built onto the floor. Whenever possible, SUZUKI recommends that child restraint systems be installed on the rear seat. According to accident statistics, children are safer when properly restrained in rear seating positions than in front seating positions.

(For countries applied for UN Regulation No.16)
When purchasing a child restraint and install it to your SUZUKI vehicle, refer to the information about suitability for child restraints shown in “Child restraint system for countries applied for UN Regulation No.16” in this section.

NOTE:
Observe any statutory regulation about child restraints.

⚠ WARNING

Do not install a rear-facing child restraint in the front passenger's seat. If the passenger's front airbag inflates, a child in a rear-facing child restraint could be killed or severely injured. The back of a rear-facing child restraint would be too close to the inflating airbag.

⚠ WARNING

If you install a child restraint system in the rear seat, slide the front seat far enough forward so that the child's feet do not touch the front seatback. This will help avoid injury to the child in the event of an accident.

⚠ WARNING

Children could be endangered in a collision if their child restraint systems are not properly secured in the vehicle. When installing a child restraint system, follow the instructions below. Secure the child in the restraint system according to the manufacturer's instructions.

Child restraint system for countries applied for UN Regulation No.16

⚠ CAUTION

Adjust the height of the head restraint or remove it for fitting the child restraint, as necessary. However, if a booster cushion not equipped with the head restraint is fitted, the head restraint should not be removed. If the head restraint is removed for fitting the child restraint, you need to install it again after removing the child restraint.
If the child restraint is fitted improperly, a child sitting in it could be injured in a collision. (Refer to "Installation with lap-shoulder seat belts" section, "Installation with ISOFIX type anchorages" section and "Installation of child restraint with top tether" section in this section for details.)

Child restraint

The suitability of each passenger's seat position for carriage of children and fitting of child restraint system is shown in the table.

Child restraint systems suitability for each seat position

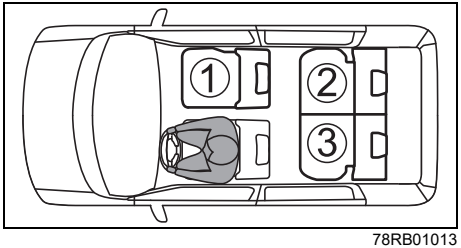

78RB01013

The above illustration shows Left handle drive vehicle.

NOTE:
Seat position number of ①, ② and ③ is same as Left handle drive vehicle for Right handle drive vehicle.

① Front passenger's seat
② Rear seat right side
③ Rear seat left side

① (#1, #2, #3)	
② (#2, #3)	
③ (#2, #3)	



It is suitable for universal category of child restraint system fixed with the vehicle seat belt.



It is suitable for i-Size and ISOFIX child restraint system.



This seat is equipped with Top tether anchorage point.



Never use a rear-facing child restraint system on the front passenger's seat when the front passenger airbag is activated.

#1: Move the front seat fully rearward.
#2: When you install a front-facing child restraint, if there is a gap or space between the child restraint and the seatback, adjust the seatback angle in order to install the child restraint system properly.
#3: If the head restraint interferes with the child restraint system, adjust the height of the head restraint or remove it, as necessary.

NOTE:
For the installation suitability of child restraint systems of Taiwan models, refer to "For Taiwan" in the "SUPPLEMENT" section.

Detailed information for child restraint system

Seat position number	Seating position		
	①	②	③
Seating position suitable for universal belted (YES/NO)	YES (#1)	YES	YES
i-Size seating position (YES/NO)	NO	YES	YES
Seating position suitable for lateral fixture (L1/L2)	NO	X	X
Suitable rear-facing fixture (R1/R2X/R2/R3)	NO	R1, R2	R1, R2
Suitable front-facing fixture (F2X/F2/F3)	NO	F2X, F2, F3	F2X, F2, F3
Suitable booster fixture (B2/B3)	B2, B3 (#1)	B2, B3	B2, B3

Key of letters to be inserted in the above table
YES =Suitable for this seating position
NO = Not suitable for this seating position
X =ISOFIX position is not suitable for ISOFIX child restraint systems in this fixture.

The child restraint system can be used in the seating positions for fixture shown in the above table.
For child restraint system fixtures, confirm the table of next page.

#1: When installing the child restraint systems, only a front-facing child restraint is suitable.

NOTE:
For the child restraint systems of Australia models, refer to “For Australia” in the “SUPPLEMENT” section.

If your child restraint system has no size class (or if you cannot find information in the following table), refer to the child restraint system suitability information for the vehicle or ask the retailer of your child seat.

ISOFIX child restraint systems are shown as follows;

ISOFIX child restraint systems are divided into different mass group, size class and fixture.

Mass group	Size class	Fixture	Description
0 (up to 10kg)	F	L1	Left Lateral facing position Child Restraint Systems (carry-cot)
	G	L2	Right Lateral facing position Child Restraint Systems (carry-cot)
	E	R1	Rear-facing seat
0+ (up to 13kg)	E	R1	Rear-facing seat
	D	R2	Reduced-Size rear-facing toddler Child Restraint Systems
	–	R2X	Reduced-Size rear-facing toddler Child Restraint Systems
	C	R3	Full-Size rear-facing toddler Child Restraint Systems
I (9kg to 18kg)	D	R2	Reduced-Size rear-facing toddler Child Restraint Systems
	–	R2X	Reduced-Size rear-facing toddler Child Restraint Systems
	C	R3	Full-Size rear-facing toddler Child Restraint Systems
	B	F2	Reduced-Height front-facing toddler Child Restraint Systems
	B1	F2X	Reduced-Height front-facing toddler Child Restraint Systems
	A	F3	Full-Height front-facing toddler Child Restraint Systems

Mass group	Size class	Fixture	Description
II (15kg to 25kg)	X	X	–
III (22kg to 36kg)	X	X	–

Key of letters to be inserted in the above table
X = There is no fixture for this mass group.

NOTE:
For Taiwan models, refer to "For Taiwan" in the "SUPPLEMENT" section.

Booster seat fixtures are shown as follows;

Fixture	Description
B2	Booster seat, reduced width 440 mm
B3	Booster seat, full width 520 mm

NOTE:
For the installation suitability of child restraint systems of Taiwan models, refer to "For Taiwan" in the "SUPPLEMENT" section.

Approval mark to meet child restraint system regulation for UN R44 / R129 regulation

The following mark is shown on the child restraint system to meet the regulation of UN R44 / R129 for the child restraint system.

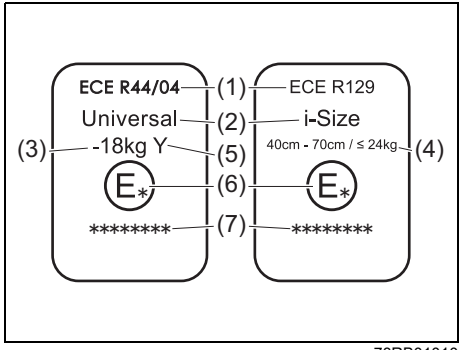

78RB01010

(1) Regulation number
(2) Suitability for child restraint system category
(3) Weight range of the applicable child who is applicable for this approval mark as shown in the mark
(4) Height range and weight range of the applicable child who is applicable for this approval mark in the mark
(5) Specification of appliance
(6) Country code which approved child restraint system
(7) Approval number of child restraint seat

This approval mark is a representative example.

NOTE:
- *UN R44 / R129 means the international regulation for the child restraint system.*
- *"ECE" is shown on the mark in the illustration for the child restraint system. This "ECE" mark is the same as "UN".*

Installation with lap-shoulder seat belts (if equipped)

⚠ CAUTION

If your vehicle is equipped with the head restraint, adjust the height of the head restraint or remove it for fitting the child restraint, as necessary. However, if a booster cushion not equipped with the head restraint is fitted, the head restraint should not be removed. If the head restraint is removed for fitting the child restraint, you need to install it again after removing the child restraint.
If the child restraint is fitted improperly, a child sitting in it could be injured in a collision.

NOTE:
Stow the removed head restraint in the luggage compartment so it will not cause inconvenience to the occupants.

ELR type belt

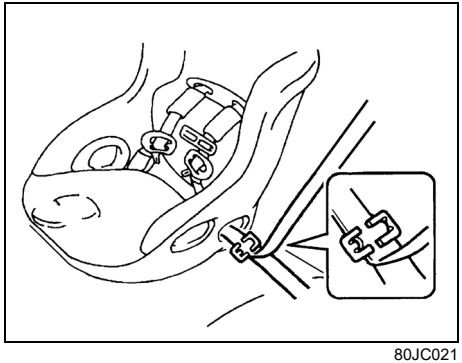

80JC021

Whenever possible, SUZUKI recommends that child restraint systems be installed on the rear seat. According to accident statistics, children are safer when properly restrained in rear seating positions than in front seating positions.

- If you must install the child restraint system on the front passenger's seat, follow instructions below.
  - Slide the seat to the most rear position by the seat position adjustment lever.
  - If there is a gap or space between the child restraint and the seatback, adjust the seatback angle in order to install the child restraint system properly.

Install your child restraint system according to the instructions provided by the child restraint system manufacturer.

Check that the seat belt is securely latched.

Move the child restraint system in all directions to check that it is securely installed.

When you put your child in the child restraint system, appropriately slide the front seat forward not to touch a part of your child's body.

Installation with ISOFIX type anchorages

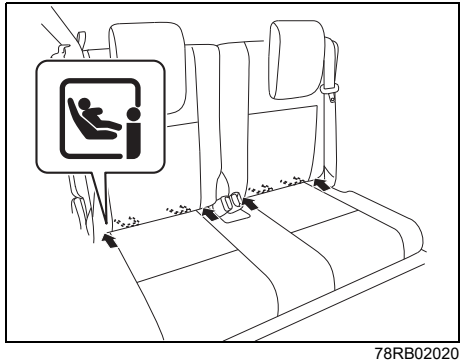

78RB02020

Your vehicle is equipped with the lower anchorages in the rear seat outboard seating positions for securing a ISOFIX type of child restraints with the connecting bars. The lower anchorages are located where the rear of the seat cushion meets the bottom of the seatback.

⚠ WARNING

Install the ISOFIX type of child restraint(s) in the only outboard seating positions, not in the central position for the rear seat.

Install the ISOFIX type child restraint system according to the instructions provided by the child restraint system manufacturer. After installation, try moving the child restraint system in all directions especially forward to check that connecting bars are securely latched to the anchorages.

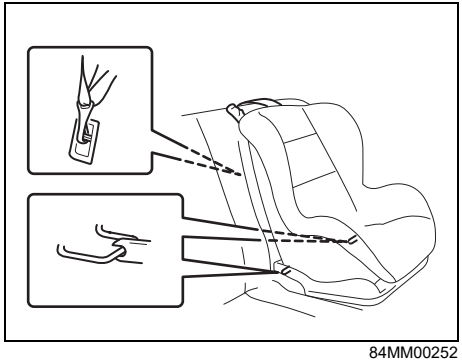

84MM00252

Your vehicle is equipped with the top tether anchorages. Use the top tether strap of the child restraint according to the instructions provided by the child restraint system manufacturer.

Here is a general instruction:

⚠ CAUTION

If your vehicle is equipped with the head restraint, adjust the height of the rear head restraint or remove it for fitting the child restraint, as necessary. However, if a booster cushion not equipped with the head restraint is fitted, the head restraint should not be removed. If the head restraint is removed for fitting the child restraint, you need to install it again after removing the child restraint.
If the child restraint is fitted improperly, a child sitting in it could be injured in a collision.

NOTE:
Stow the removed head restraint in the luggage compartment so it will not cause inconvenience to the occupants.

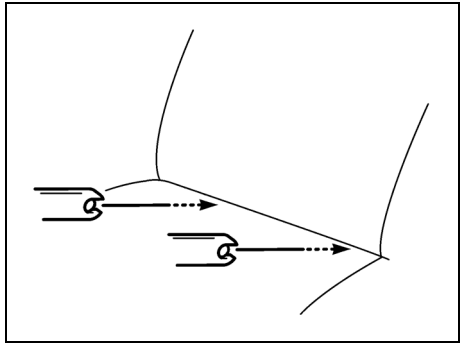

78F114

1) Place the child restraint in the rear seat, inserting the connecting bars to the anchorages between the seat cushion and the seatback.

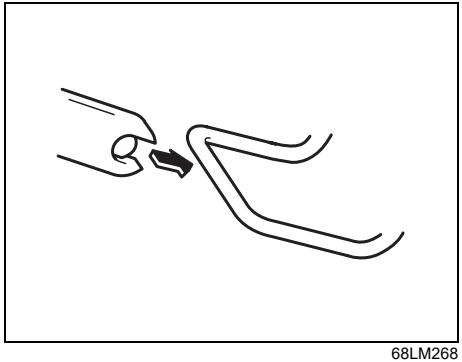

68LM268

2) Use your hands to carefully align the connecting bar tips with the anchorages. Take care not to pinch your fingers.

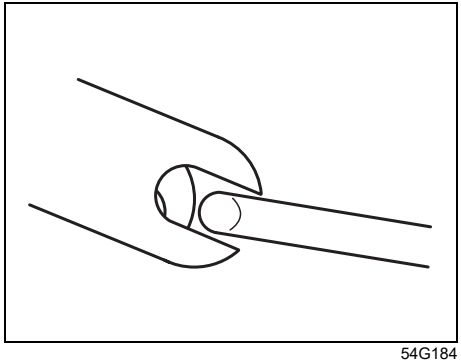

54G184

3) Push the child restraint toward the anchorages so that the connecting bar tips are partially hooked to the anchorages. Use your hands to confirm the position.

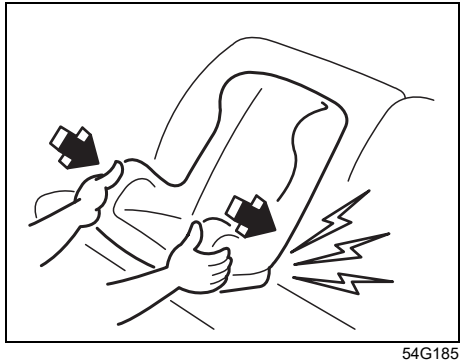

54G185

4) Grasp the front of the child restraint and push the child restraint forcefully to latch the connecting bars. Check that they are securely latched by trying to move the child restraint system in all directions, especially forward.
5) Attach the top tether strap referring to “Installation of child restraint with top tether” section.
   When you put your child in the child restraint system, appropriately slide the front seat forward not to touch a part of your child’s body.

NOTICE

When installing a child restraint system to the rear seat, adjust the front seat position so that the front seat does not interfere with the child restraint system.

Installation of child restraint with top tether

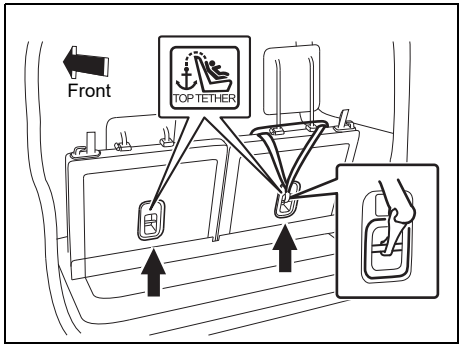

78RB02021

Some child restraint systems require the use of a top tether strap. Top tether anchorage brackets are provided in your vehicle at the locations shown in the illustrations.
The number of the top tether anchorage brackets provided in your vehicle depends on the vehicle specification. Install the child restraint system as follows:

1) Secure the child restraint on the rear seat using the procedure described above for securing a restraint system that does not require a top tether strap.
2) Hook the top tether strap to the top tether anchorage bracket and tighten the top tether strap according to the instructions provided by the child restraint system manufacturer. Attach the top tether strap to the corresponding top tether anchorage bracket located directly behind the child restraint. Do not attach the top tether strap to the luggage restraint loops (if equipped).

⚠ WARNING

Do not attach the child restraint top tether strap to the luggage restraint loops (if equipped). Incorrectly attached top tether strap will reduce the intended effectiveness of the child restraint system.

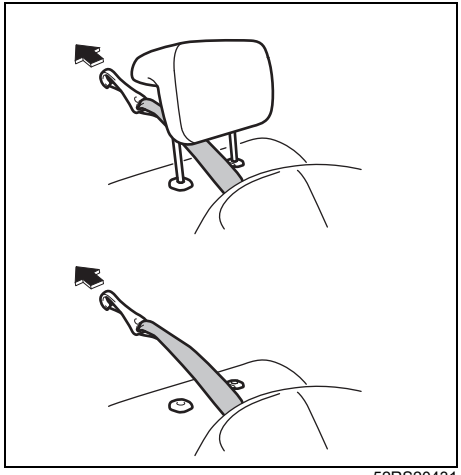

52RS20431

3) When routing the top tether strap, pass the top tether strap as shown in the illustration. (Refer to “Head restraints” section for details on how to adjust the height of head restraint or remove it.)
4) Check that cargo does not interfere with routing of the top tether strap.

NOTICE

When installing a child restraint system to the rear seat, adjust the front seat position so that the front seat does not interfere with the child restraint system.

NOTE:
For Australian models, refer to “For Australia” in the “SUPPLEMENT” section.

Supplemental restraint system (airbags)

⚠ WARNING

This section describes the protection provided by your SUZUKI vehicle's supplemental restraint system (airbags). Read and follow all instructions carefully to minimize your risk of severe injury or death in the event of a collision.

Your vehicle is equipped with a supplemental restraint system consisting of the following components in addition to a lap-shoulder belt at each seating position.

(1) Forward crash sensor
(2) Side crash sensor
(3) Driver's front airbag module
(4) Side curtain airbag module
(5) Front passenger's front airbag module
(6) Side airbag module
(7) Front seat belt pretensioners (if equipped)
(8) Rear seat belt pretensioners (if equipped)
(9) Airbag controller

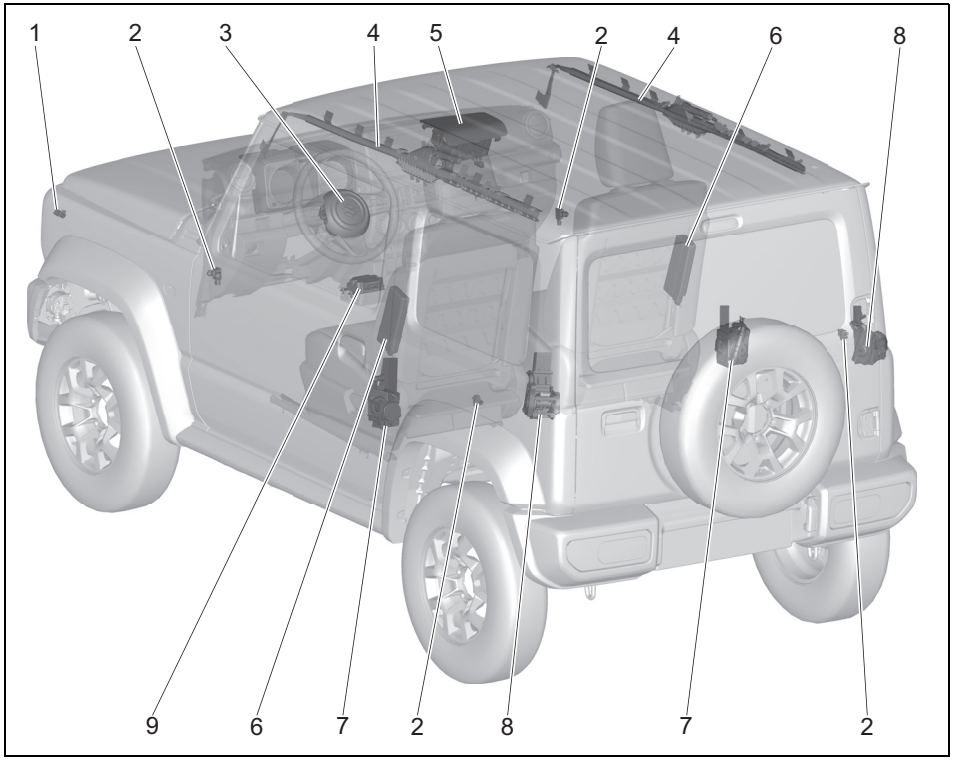

78RB02022

What is SRS Airbag System?

SRS stands for “Supplemental Restraint System”. This system aims to restrain passengers in their seats for safety.

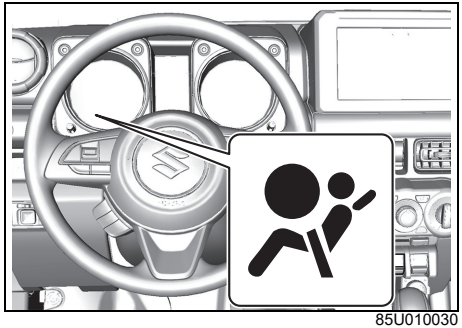

85U010030

If airbag warning light on the instrument cluster does not blink or come on when the ignition switch is first turned to “ON” position, or the ignition mode is first changed to ON, or airbag warning light stays on, or comes on while driving, the airbag system (or the seat belt pretensioner system) may not work properly. Have the airbag system inspected by an authorized SUZUKI dealer or a qualified workshop as soon as possible.

⚠ WARNING

- **SRS airbag system is not a substitute for seat belts. SRS airbag system is the supplemental restraint system and will provide the effectiveness by using the seat belts at the same time.**
  If you and the passengers do not fasten their seat belts, it may result in severe injury in a sudden braking or a collision.
  Even when you drive the vehicle equipped with SRS airbag system, make sure to fasten seat belt.
- **If the seat belts are not fastened properly, airbags may not provide the best performance. This may cause severe injury in a sudden braking and a collision.**
  Make sure that the driver and all the passengers fasten the seat belts properly in a correct posture.

NOTE:
Via the event data recorder (EDR) system, this vehicle records and accumulates data when the airbag is deployed.

Warning label for front passenger’s front airbag



72M00150

You may find this label on the sun visor.

⚠ WARNING

NEVER use a rearward facing child restraint on a seat protected by an ACTIVE AIRBAG in front of it, DEATH or SERIOUS INJURY to the CHILD can occur.

NOTE:
- *For the label of Australia models, refer to "For Australia" in the "SUPPLEMENT" section.*
- *For the label of GCC Countries' models, refer to "For GCC countries" in the "SUPPLEMENT" section.*
- *For the label of Taiwan models, refer to "For Taiwan" in the "SUPPLEMENT" section.*

Description of warning label

Symbol	Symbol meaning
	Do not install a rear-facing child restraint system to the front passenger's seat equipped with an airbag.
	If the front passenger's seat airbag were to be deployed, a major impact could be applied to a rear-facing child restraint system and the child.

Symbol	Symbol meaning
	For more details, read this owner's manual.

Front airbags

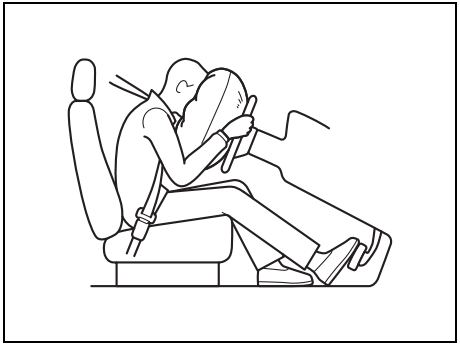

63J259

Front airbags are designed to inflate in severe frontal collisions when the ignition switch is in "ON" position or press the engine switch to change the ignition mode to ON.

NOTE:
In a frontal angle collision, the side airbags and side curtain airbags may inflate.

Front airbags are not designed to inflate in rear impacts, side impacts, rollovers or minor frontal collisions, since they would offer no protection in those types of accidents. Since an airbag deploys only one time during an accident, seat belts are needed to restrain occupants from further movements during the accident.

Therefore, an airbag is not a substitute for seat belts. To maximize your protection, always fasten your seat belts. Be aware that no system can prevent all possible injuries that may occur in an accident.

Driver's front airbag

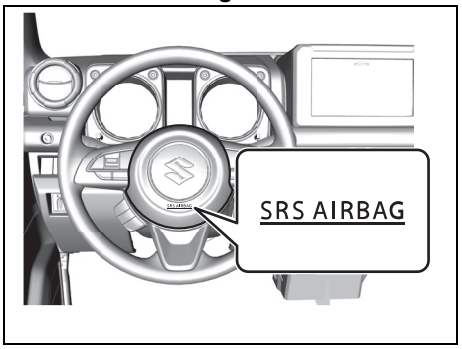

78RB02023

Front passenger's front airbag

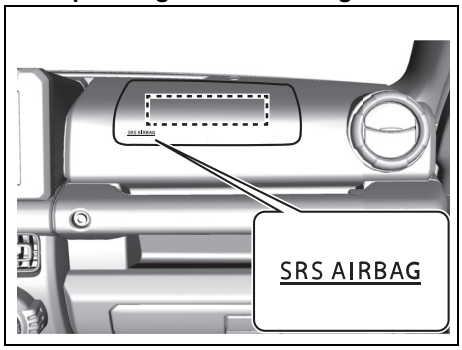

78RB02024

The driver's front airbag is located behind the center pad of the steering wheel and the front passenger's front airbag is located behind the passenger's side of the dashboard.
The words "SRS AIRBAG" are molded into the airbag covers to identify the location of the airbags.

⚠ WARNING

If the airbag stored place is damaged or cracked, the airbag system may not work properly, which could result in serious injury in the event of a collision. Have your vehicle inspected by an authorized SUZUKI dealer or a qualified workshop.

⚠ WARNING

Do not install a rear-facing child restraint in the front passenger's seat. If the passenger's front airbag inflates, a child in a rear-facing child restraint could be killed or severely injured. The back of a rear-facing child restraint would be too close to the inflating airbag.

Refer to "Seat belts and child restraint systems" section for details on securing your child.

Conditions of front airbags deployment (inflation)

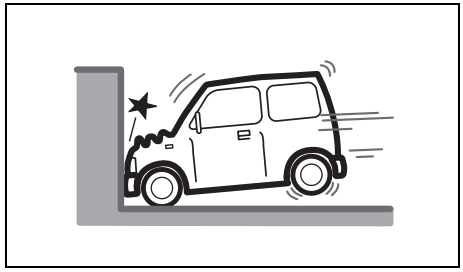

80J097

- Frontal collision with a fixed wall that does not move or deform at more than about 25 km/h (15 mph)

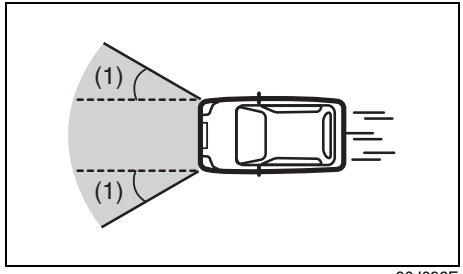

80J098E

- Strong impact equivalent to frontal collision such as above at left and right angles of about 30 degrees (1) or less from the front of your vehicle

Conditions of front airbags may inflate
Receiving a strong impact to the lower body of your vehicle, the front airbags may inflate.

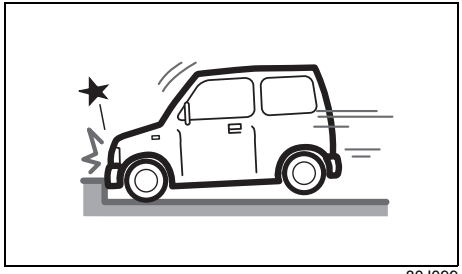

80J099

- Hitting a curb or medial strip

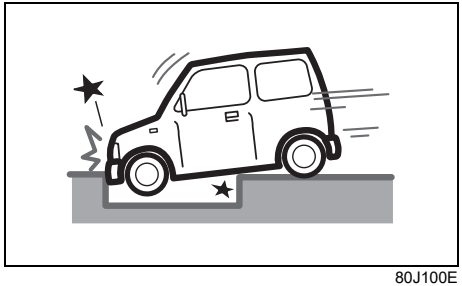

80J100E

- Falling into a deep hole or ditch

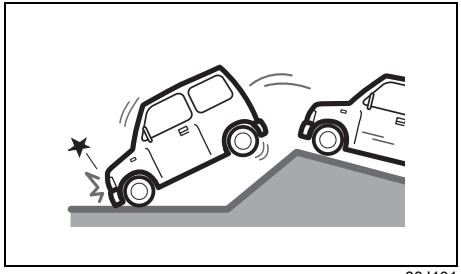

80J101

- Landing hard or falling

Front airbags may not inflate
The front airbags may not inflate when a strong impact has not occurred since the collision object was easy to be deformed or moved, or the crashed portion of your vehicle was easy to be deformed.
Also, front airbags may not inflate in many cases when the collision angle is greater than about 30 degrees at left and right angles from the front of your vehicle.

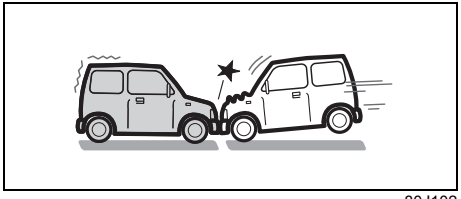

80J102

- Frontal collision to a stopped vehicle at less than about 50 km/h (30 mph)

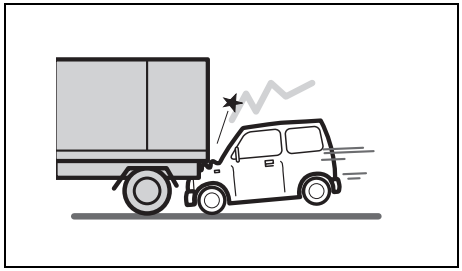

80J103

- Collision that the front of your vehicle goes under the bed of a truck etc.

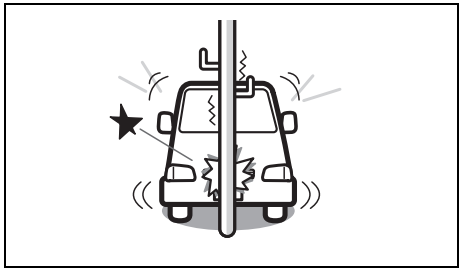

80J104

- Collision with a utility pole or stumpage

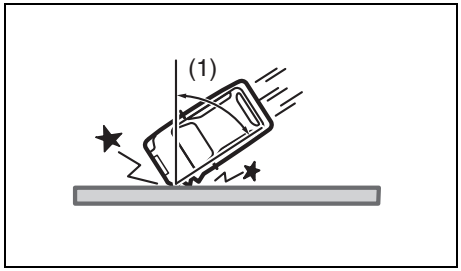

80J105E

- Collision with a fixed wall or guardrail at left and right angles of greater than about 30 degrees (1) from the front of your vehicle

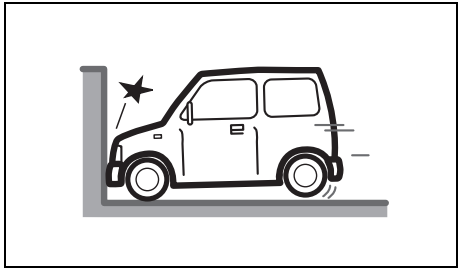

80J106

- Frontal collision with a fixed wall that does not move or deform at less than about 25 km/h (15 mph)

Front airbags do not inflate

Front airbags do not inflate in rear impacts, side impacts or rollovers, etc. However, these might inflate in a strong impact.

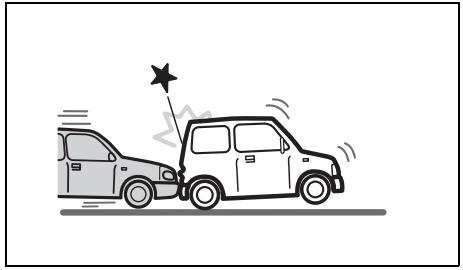

80J120

- Impact from the rear

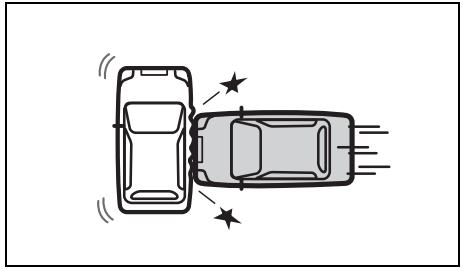

80J119

- Impact from the side

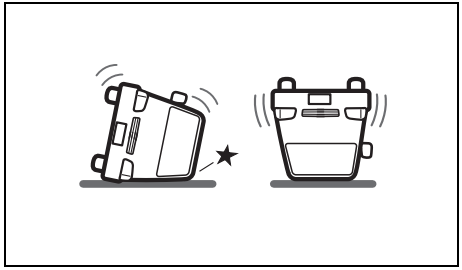

80J110

• Vehicle rollover

Side airbags and side curtain airbags

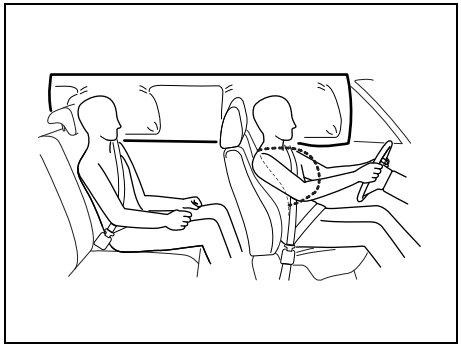

68KM090

Side airbags and side curtain airbags are designed to inflate in severe side impact collisions when the ignition switch is in “ON” position or press the engine switch to change the ignition mode to ON.

Side airbags and side curtain airbags are not designed to inflate in frontal or rear collisions, rollovers or minor side collisions, since they would offer no protection in those types of accidents. Only the side airbag and side curtain airbag on the side of the vehicle that is struck will inflate. However, in a frontal angle collision, the side airbags and side curtain airbags may inflate. Since an airbag deploys only one time during an accident, seat belts are needed to restrain occupants from further movements during the accident.
Therefore, an airbag is not a substitute for seat belts. To maximize your protection, always fasten your seat belts. Be aware that no system can prevent all possible injuries that may occur in an accident.

Side airbags

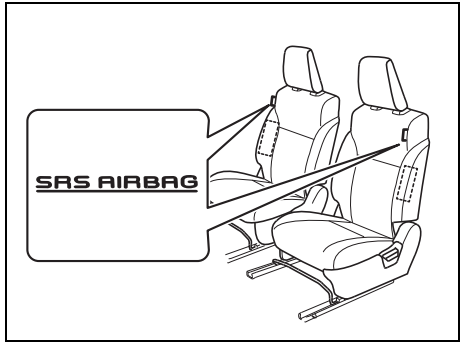

78RB02025

Side airbags are located in the part of the front seatbacks closest to the doors. The “SRS AIRBAG” labels are attached to the seatbacks to identify the location of the side airbags.

Side curtain airbags

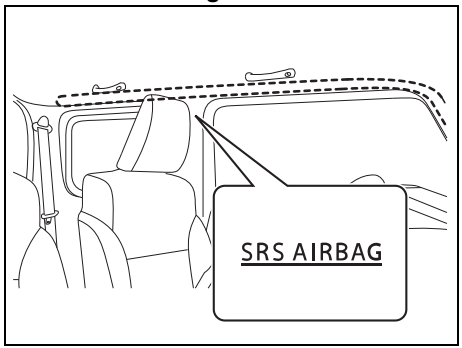

78RB02026

Side curtain airbags are located in the roof lining. The words “SRS AIRBAG” are molded into the pillar to identify the location of the side curtain airbags.

⚠ WARNING

If the airbag stored place is damaged or cracked, the airbag system may not work properly, which could result in serious injury in the event of a collision. Have your vehicle inspected by an authorized SUZUKI dealer or a qualified workshop.

Conditions of side airbags and side curtain airbags deployment (inflation)

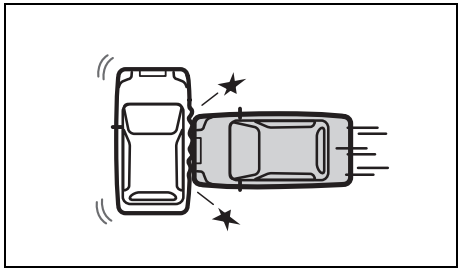

80J119

- Impacts from the side at about a right angle by a general passenger car to your vehicle at more than about 30 km/h (19 mph) or in a greater impact

Side airbags and side curtain airbags may inflate in a strong impact

Side airbags and side curtain airbags may inflate even in a frontal collision, if there is a strong impact to the lateral direction.

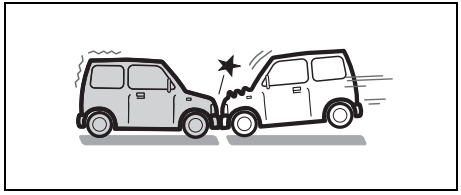

80J102

- Frontal collision

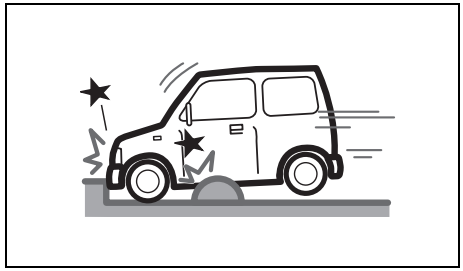

52RM20730

- Hitting a curb or bump

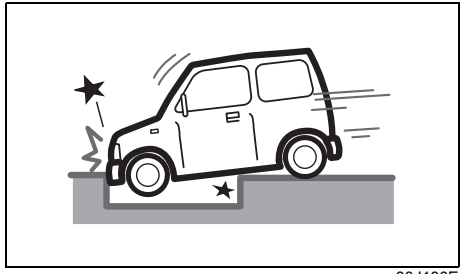

80J100E

- Falling into a deep hole or ditch

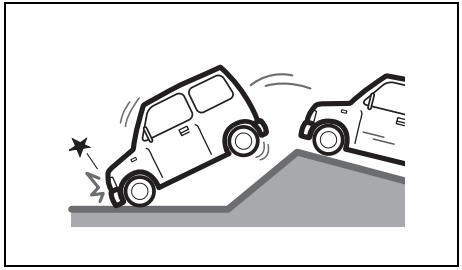

80J101

- Landing hard or falling

Side airbags and side curtain airbags may not inflate

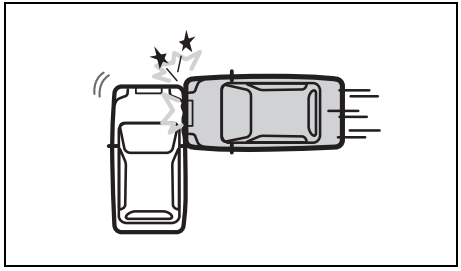

80J121

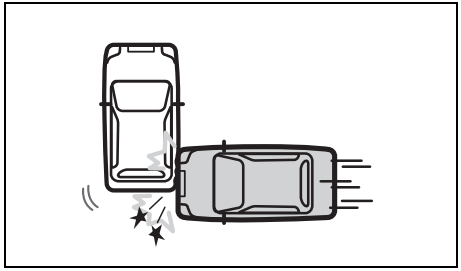

80J122

- Impact from the side to the vehicle body other than the passenger compartment

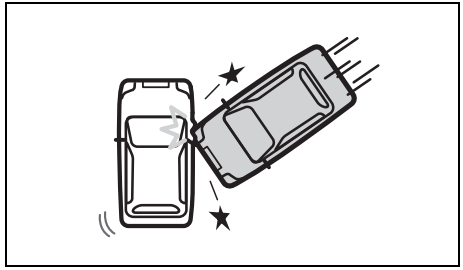

80J123

- Impact from the side at an oblique angle

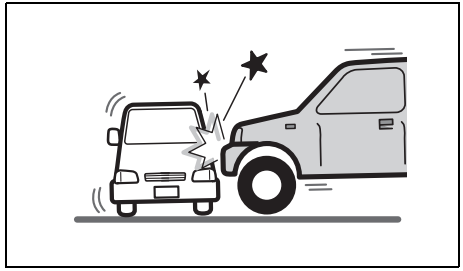

80J124

- Impact from the side by a high hood vehicle

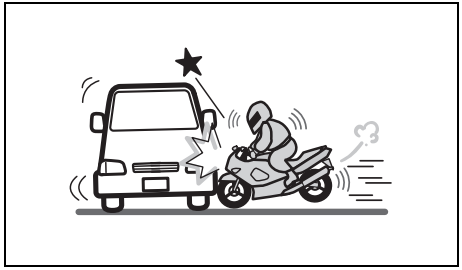

80J125

- Impact from the side by a motorcycle or bicycle

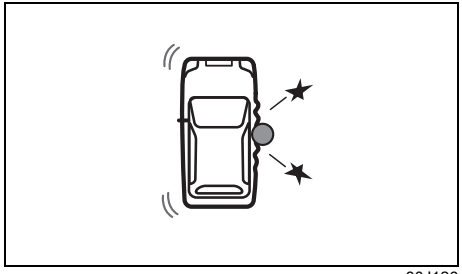

80J126

- Collision with a utility pole or stumpage

Side airbags and side curtain airbags do not inflate

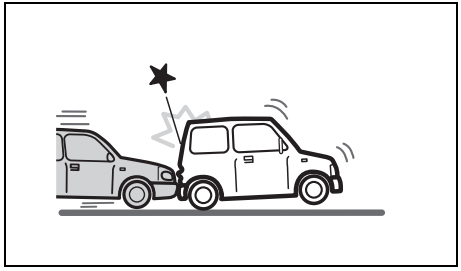

80J120

- Impact from the rear

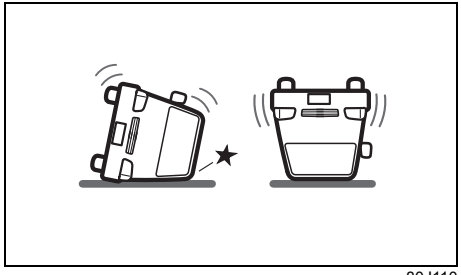

80J110

- Vehicle rollover

How the system works

In a frontal collision, the crash sensors will detect rapid deceleration, and if the controller judges that the deceleration represents a severe frontal collision, the controller will trigger the inflators. If your vehicle is equipped with side airbags and side curtain airbags, crash sensors will detect a side collision, and if the controller judges that the side collision is severe enough, it will trigger the side airbag and side curtain airbag inflators. The inflators inflate the appropriate airbags with nitrogen or argon gas. The inflated airbags provide a cushion for your head (front airbags and side curtain airbags only) and upper body. The airbag inflates and deflates so quickly that you may not even realize that it has activated. The airbag will neither hinder your view nor make it harder to exit the vehicle.

A seat belt helps keep you in the proper position for maximum protection when an airbag inflates. Adjust your seat as far back as possible while still maintaining control of the vehicle. Sit fully back in your seat; sit up straight; do not lean over the steering wheel or dashboard. Front occupants should not lean on or sleep against the door. Refer to “Seat adjustment” section and “Seat belts and child restraint systems” section in this section for details on proper seat and seat belt adjustments.



65D610



54G582



65D608

⚠ WARNING

- **The driver should not lean over the steering wheel. The front passenger should not rest his or her body against the dashboard where a front airbag is mounted or a child should not stand in front of the dashboard. Otherwise, he or she will get too close to the dashboard. For vehicles with side airbags and side curtain airbag, occupants should not lean on or sleep against the door. In these situations, the out-of-position occupant would be too close to an inflating airbag, and may suffer severe injury.**
- **Do not attach any objects to, or place any objects over, the steering wheel or dashboard. Do not place any objects between the airbag and the driver or front passenger. These objects may interfere with airbag operation or may be propelled by the airbag in the event of a collision. Also, these objects may move when you start moving vehicle or while vehicle is moving, they may interfere with driver's view or safe driving. In each conditions may cause severe injury.**

(Continued)

⚠ WARNING

(Continued)

- **For vehicles with side airbags, do not use non-genuine seat covers on the front seats, because non-genuine seat covers may obstruct the inflation of side airbags. SUZUKI highly recommends SUZUKI genuine seat covers to be used when covering the front seats of such vehicles with side airbags. Also, near the door, do not place cup holders, hangers or any other objects and do not lean an umbrella, as these objects could be propelled by the airbag in the event of a collision. Either of these conditions may cause severe injury.**
- **Do not strike or apply significant levels of impact to the airbag component areas. It can cause the airbags to malfunction.**
- **Even though your vehicle is moderately damaged by a collision, it may not be severe enough to trigger front, side or side curtain airbags to inflate. If your vehicle sustains any front-end or side damage, have the airbag system inspected by an authorized SUZUKI dealer or a qualified workshop to ensure that it works properly. If the original function of airbag system is damaged, airbag may not function effectively and fully in case of an emergency.**

⚠ CAUTION

Airbags must inflate quickly and forcefully in order to reduce the chance of serious or fatal injuries. However, an unavoidable consequence of the quick inflation is that the airbag may irritate bare skin, such as the facial area against a front airbag. Wash off any residue as soon as possible to prevent skin irritation. Also, upon inflation, a loud noise will occur and some powder and smoke will be released. These conditions are not harmful and do not indicate a fire in the vehicle. Be aware, however, that some airbag components may be hot for a while after inflation. This may cause burn injury.

Your vehicle is equipped with a diagnostic module which records information about the airbag system if the airbags deploy in a collision. The module records information about overall system status, and which sensors activated the deployment, and for a certain vehicle only, whether the driver's seat belt was in use.

Servicing the airbag system

If the airbags inflate, have the airbags and related components replaced by an authorized SUZUKI dealer or a qualified workshop as soon as possible.

If your vehicle ever gets in deep water and the driver's floor is submerged, the airbag controller could be damaged. If this happens, ask an authorized SUZUKI dealer or a qualified workshop to check the airbag system as soon as possible.

Special procedures are required for servicing or replacing an airbag. For that reason, only an authorized SUZUKI dealer or a qualified workshop should be allowed to service or replace your airbags. Remind anyone who services your SUZUKI vehicle that it has airbags.

Service on or around airbag components or wiring must be performed only by an authorized SUZUKI dealer or a qualified workshop. Improper service could result in unintended airbag deployment or could render the airbag inoperative. Either of these two conditions may result in severe injury.

To prevent damage or unintended inflation of the airbag system, check that the lead-acid battery is disconnected and the ignition switch has been in "LOCK" position or the ignition mode has been in LOCK (OFF) for at least 90 seconds before performing any electrical service work on your SUZUKI vehicle. Do not touch airbag system components or wires. The wires are wrapped with yellow tape or yellow tubing, and the couplers are yellow for easy identification.

Scrapping a vehicle that has an uninflated airbag can be hazardous. Ask an authorized SUZUKI dealer, body repair shop or scrap yard for help with disposal.

Exhaust gas warning

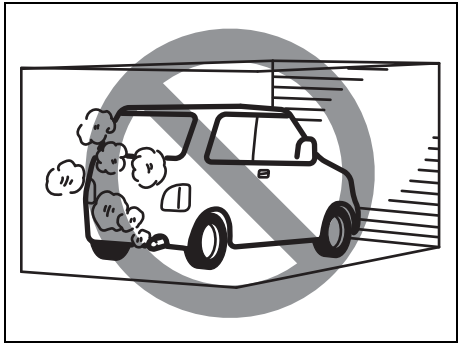

52D334

⚠ WARNING

Avoid breathing exhaust gases. Exhaust gases contain carbon monoxide, a potentially lethal gas that is colorless and odorless. Since carbon monoxide is difficult to detect by itself, take the following precautions to help prevent carbon monoxide from entering your vehicle.

- **Do not leave the engine running in garages or other confined areas.**

(Continued)

⚠ WARNING

(Continued)

- **Do not park with the engine running for a long period of time, even in an open area. If it is necessary to sit for a short time in a parked vehicle with the engine running, check that the air intake selector is set to "FRESH AIR" and the blower is at high speed.**
- **Avoid operating the vehicle with the tailgate or trunk open. If it is necessary to do so, check that the sunroof (if equipped) and all windows are closed, and the blower is at high speed with the air intake selector set to "FRESH AIR".**
- **To allow proper operation of your vehicle's ventilation system, keep the air inlet grill in front of the windshield clear of snow, leaves or other obstructions at all times.**
- **Keep the exhaust tailpipe area clear of snow and other material to help reduce the buildup of exhaust gases under the vehicle. This is particularly important when parked in blizzard conditions.**
- **Have the exhaust system inspected periodically for damage and leakage. Any damage or leakage should be repaired immediately.**

Do not take a nap with engine running

⚠ WARNING

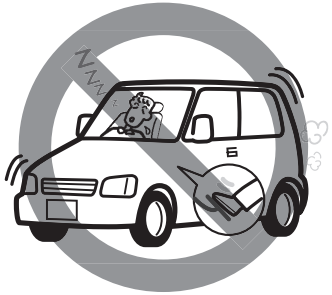

69RHS172

Do not take a nap with the engine running. Otherwise, it may result in an accident, severe health problems or death in the worst case.

- **Exhaust gases can enter the vehicle due to surrounding conditions and wind direction, possibly causing carbon monoxide poisoning.**

(Continued)

⚠ WARNING

(Continued)

- **The gearshift lever could change unintentionally, or the accelerator pedal could be depressed accidentally, causing an accident.**
- **If you were to accidentally step on the accelerator pedal while asleep, the engine and exhaust system could overheat, resulting in danger of fire.**

MEMO

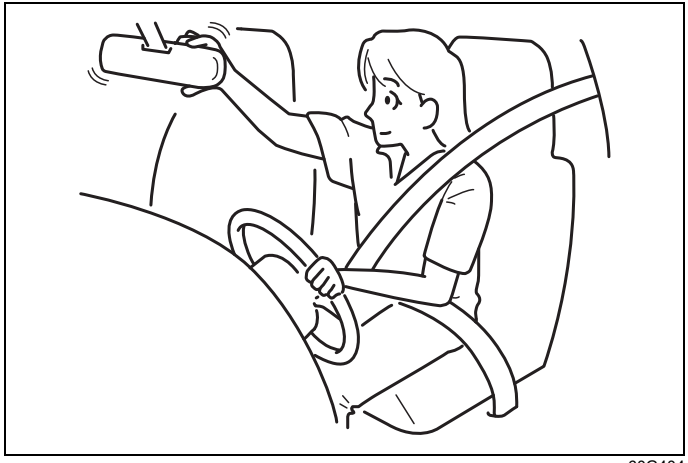

60G404

BEFORE DRIVING

Keys 2-1
Door locks 2-2
Keyless entry system transmitter /
Keyless push start system remote controller 2-6
Theft deterrent alarm system (if equipped) 2-15
Theft deterrent light (if equipped) 2-19
Windows 2-19
Mirrors 2-21
Instrument cluster 2-26
Speedometer 2-27
Tachometer 2-27
Fuel gauge 2-27
Brightness control 2-28
Information switch 2-29
Information display 2-29
Lighting control lever 2-82
Headlight leveling switch (if equipped) 2-92
Headlight washer switch (if equipped) 2-92
Turn signal control lever 2-93
Hazard warning switch 2-94
Windshield wiper and washer lever 2-94
Tilt steering lock lever 2-97
Horn 2-97
Heated rear window switch /
heated outside rearview mirror switch (if equipped) 2-97
Vehicle loading 2-98
Trailer towing 2-99

Keys

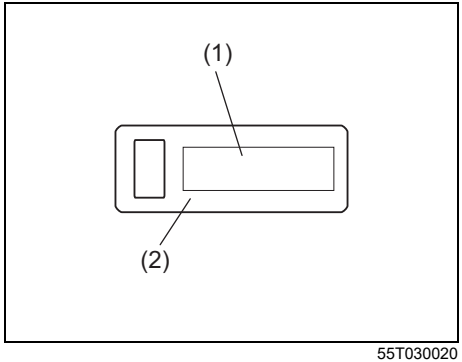

55T030020

Your vehicle comes with a pair of identical keys. Keep one of the keys as a spare key in a safe place. One key can open all of the locks on the vehicle.

The key identification number (1) is stamped on a metal tag (2) provided with the keys or on the keys. Keep the tag in a safe place. If you lose your keys, you will need this number to have new keys made. Write the number below for your future reference.

KEY NUMBER:

Immobilizer system

This system is designed to help prevent vehicle theft by electronically disabling the engine starting system.
The engine can be started only with your vehicle's original immobilizer ignition key or keyless push start system remote controller, which has an electronic identification code programmed in it. The key communicates the identification code to the vehicle when the ignition switch is turned to "ON" position or press the engine switch to change the ignition mode to ON. If you need to make spare keys, see an authorized SUZUKI dealer or a qualified workshop. The vehicle must be programmed with the correct identification code for the spare. A key made by an ordinary locksmith will not work.

In the case you can start the engine, when the ignition switch is turned to "ON" position or press the engine switch to change the ignition mode to ON, the immobilizer system will be released and the immobilizer/keyless push start system warning light will turn on for about 2 seconds and then it will turn off.

When you turn the ignition switch to "LOCK" or press the engine switch to change the ignition mode to LOCK (OFF), the immobilizer system will operate.

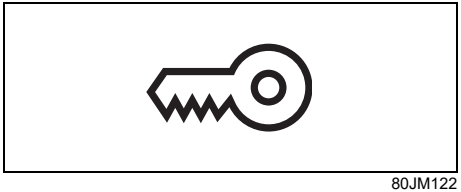

80JM122

If the immobilizer/keyless push start system warning light blinks when the ignition switch is in "ON" position or press the engine switch to change the ignition mode to ON, the engine will not start.

NOTICE
Do not modify or remove the immobilizer system. If modified or removed, the system cannot be properly operated.

NOTE:
- *If the immobilizer system/keyless push start system warning light blinks or comes on, a message may be shown on the information display.*
- *This immobilizer system is maintenance-free.*

For vehicles without a keyless push start system
If this light blinks, turn the ignition switch to "LOCK" position, and then turn it back to "ON" position.
If the light still blinks after the ignition switch is turned back to "ON" position,

there may be something wrong with your key or with the immobilizer system. Ask an authorized SUZUKI dealer or a qualified workshop to have the system inspected.

For vehicles with a keyless push start system
If this light blinks, change the ignition mode to LOCK (OFF), and then change it back to ON. Also refer to “If the master warning indicator light blinks and the engine cannot be started” in “Starting / stopping engine (vehicle with keyless push start system) (if equipped)” in “OPERATING YOUR VEHICLE” section.
If the light still blinks after the ignition mode is changed back to ON, there may be something wrong with your key or with the immobilizer system. Ask an authorized SUZUKI dealer or a qualified workshop to have the system inspected.

The immobilizer/keyless push start system warning light may also blink if the remote controller is not in the vehicle when you close the door or attempt to start the engine.

NOTE:
- *If you lose your immobilizer ignition key or remote controller, ask an authorized SUZUKI dealer or a qualified workshop as soon as possible to deactivate the lost one, and to make a new key.*
- *If you own other vehicles with immobilizer keys, keep those keys away from the ignition switch or the engine switch when using your SUZUKI vehicle. Otherwise, the engine may not be started because they may interfere with your SUZUKI vehicle’s immobilizer system.*
- *If you attach any metal objects to the immobilizer key, it may not start the engine.*

NOTICE

The immobilizer key is sensitive electronic instruments. To avoid damaging them:
- **Do not expose them to impacts, moisture or high temperature such as on the dashboard under direct sunlight.**
- **Keep them away from magnetic objects.**

Ignition key reminder (if equipped)

A buzzer sounds intermittently to remind you to remove the ignition key if it is in the ignition keyhole when the driver’s door is opened.

Door locks

Side door locks

Left hand vehicle

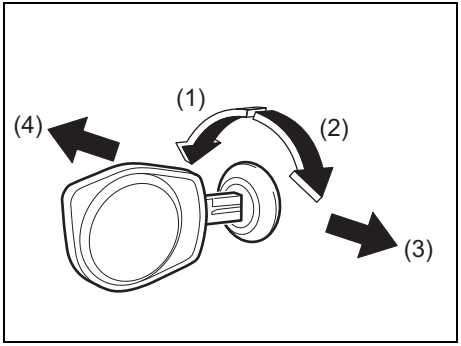

52RM20830

Right hand vehicle

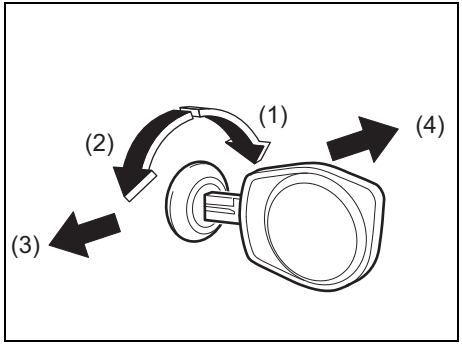

85U020050

(1) LOCK
(2) UNLOCK
(3) Rear
(4) Front

To lock a driver's door from the outside of the vehicle:

- Insert a key and turn the top of the key toward the front of the vehicle, or
- Turn the lock knob forward, then pull and hold the door handle as you close the door.

To unlock a driver's door from the outside of the vehicle, insert the key and turn the top of the key toward the rear of the vehicle.

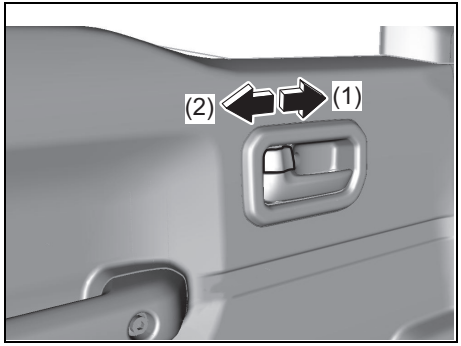

78RB02001

(1) LOCK
(2) UNLOCK

To lock a door from the inside of the vehicle, turn the lock knob forward. Turn the lock knob backward to unlock the door.

NOTE:
Hold the door handle when you close a locked front door, or the door will not remain locked.

Central door locking system

Left hand vehicle

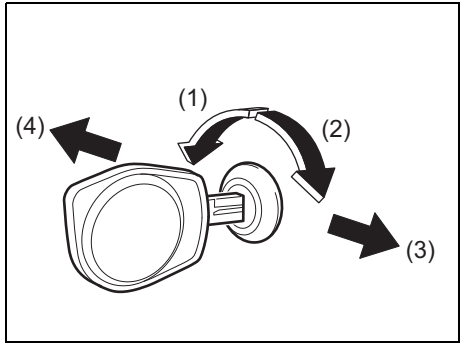

52RM20830

Right hand vehicle

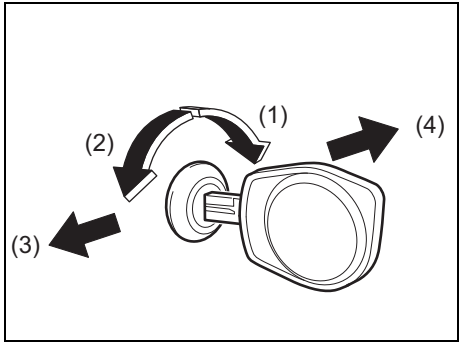

85U020050

(1) LOCK
(2) UNLOCK
(3) Rear
(4) Front

You can lock and unlock all doors (including the tailgate) simultaneously by using the key in the driver's door lock.

To lock all doors simultaneously, insert the key in the driver's door lock and turn the top of the key toward the front of the vehicle.

To unlock all doors simultaneously, insert the key in the driver's door lock and turn the top of the key toward the rear of the vehicle.

NOTE:
You can also lock or unlock all doors by operating the transmitter. Refer to "Keyless entry system transmitter / Keyless push start system remote controller" in this section.

Tailgate

⚠ WARNING

Always check that the tailgate is closed and latched securely. Completely closing the tailgate helps prevent occupants from being thrown from the vehicle in the event of an accident. Completely closing it also helps keep exhaust gases from entering the vehicle.

⚠ CAUTION

If you unlock the tailgate, pull up the tailgate handle and pull the tailgate, it will continue to open to the fully-open position by the damper stay performance. Check that no obstacle exists within the opening and closing range of the tailgate.

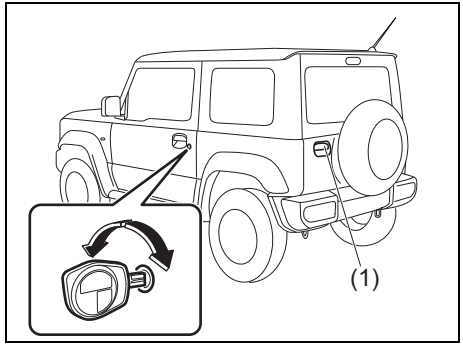

78RB02002

(1) Tailgate handle

You can lock and unlock the tailgate by using the key in the driver's door lock.

To open the tailgate, pull up the tailgate handle (1) and pull the tailgate.

If you cannot unlock the tailgate by using the key in the driver's door lock due to a discharged lead-acid battery or malfunction, follow the procedure below to unlatch the tailgate from inside the vehicle.

1) Fold the rear seat forward for easier access. Refer to "Folding rear seats" in this section for details on how to fold the rear seat forward.

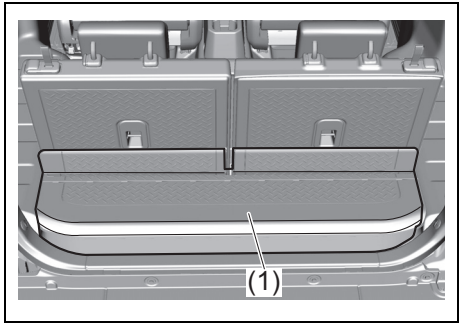

78RB02095

2) Remove the luggage box (1).

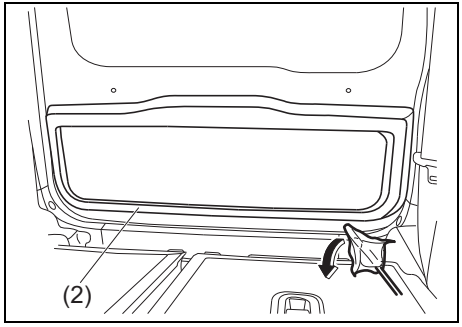

78RB02003

3) Remove the trim (2) of the tailgate.
- Insert a flat-bladed screwdriver covered with a soft cloth between the trim and the tailgate to make a space for fingers, and then pull out the trim with your fingers.

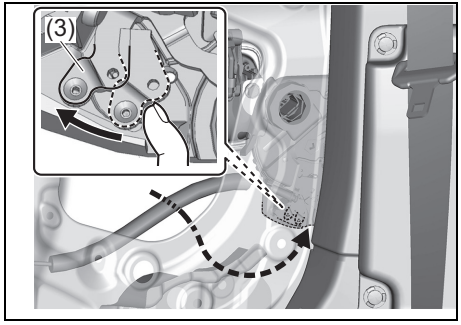

78RB02004

4) Move the lever (3) in arrow direction to unlock the tailgate.

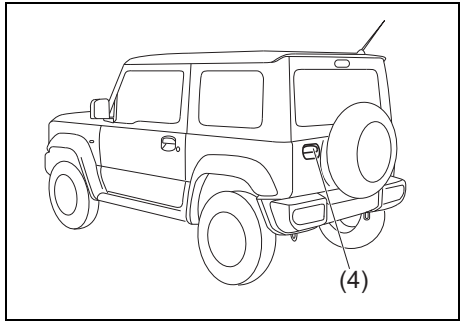

78RB02090

5) From outside the vehicle, pull up the tailgate handle (4) and open the tailgate.

If the tailgate cannot be unlatched by pulling up the tailgate handle, have the vehicle inspected by an authorized SUZUKI dealer or a qualified workshop.

⚠ CAUTION

Check that there is no one near the tailgate when pushing open the tailgate from inside the vehicle.

Keyless entry system transmitter / Keyless push start system remote controller

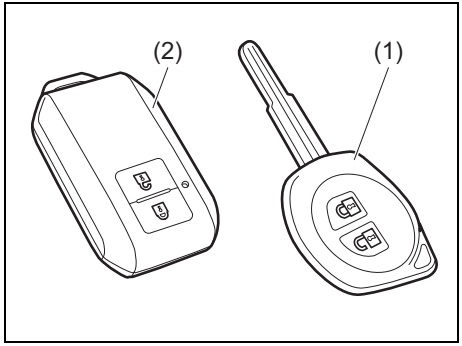

55T030010

Your vehicle is equipped with either a keyless entry system transmitter (1) or a keyless push start system remote controller (2). The transmitter has only a keyless entry system. The remote controller has a keyless entry system and a keyless push start system. For details, refer to the following explanations.

⚠ WARNING

Radio waves from the keyless push start system antenna(s) may interfere with operation of electrical medical equipment such as pacemakers. Failure to take the precautions listed below can increase the risk of severe injury or death due to radio wave interference.

- **Anyone who uses electrical medical equipment such as a pacemaker should consult the medical equipment supplier or their medical advisor about whether radio waves from the antenna(s) can interfere with the medical equipment.**
- **If radio wave interference is a concern, have the function of the antenna(s) disabled by an authorized SUZUKI dealer or a qualified workshop.**

Keyless entry system transmitter (if equipped)

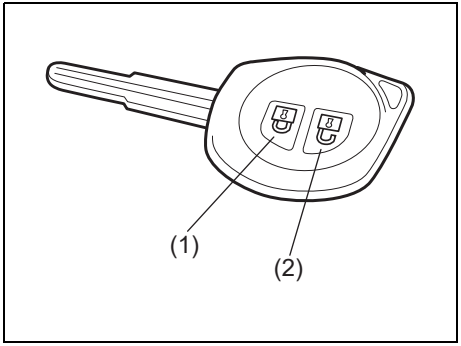

79MH0237

(1) LOCK button
(2) UNLOCK button

There are two ways to lock or unlock all doors (including the tailgate) simultaneously by operating the transmitter near the vehicle.

Central door locking system
- To lock all doors, push LOCK button (1) once.
- To unlock all door, push UNLOCK button (2) once.

The turn signal lights will flash once when the doors are locked.

When the doors are unlocked:
- The turn signal lights will flash twice.
- If the interior light switch is in DOOR position, the interior light will turn on for about 15 seconds and then fade out. If you insert the key into the ignition switch during this time, the light will start to fade out immediately.

Check that the doors are locked after you operate LOCK button (1).

NOTE:
If no door is opened within about 30 seconds after UNLOCK button (2) is operated, the doors will automatically lock again.

NOTE:
- *The maximum operating distance of the keyless entry system transmitter is about 5 m (16 ft.), but this can vary depending on the surroundings, especially near other transmitting devices such as radio towers or CB (Citizen's Band) radios.*
- *The door locks cannot be operated with the transmitter, if the ignition key is inserted in the ignition switch.*
- *When any door is open, the door locks can only be unlocked with the transmitter, and the turn signal light will flash.*
- *If you lose one of the transmitters, ask an authorized SUZUKI dealer or a qualified workshop as soon as possible for a replacement. Have an authorized SUZUKI dealer or a qualified workshop program the new transmitter code in your vehicle's memory so that the old code is erased.*

NOTICE

The transmitter is a sensitive electronic instrument. To avoid damaging the transmitter:
- **Do not expose it to impacts, moisture or high temperature such as by leaving it on the dashboard under direct sunlight.**
- **Keep the transmitter away from magnetic objects such as a television.**

Battery replacement
If the transmitter becomes unusable, replace the battery.

NOTE:
You may damage the transmitter when replacing its battery. Asking an authorized SUZUKI dealer or a qualified workshop is recommended.

To replace the battery of the transmitter:

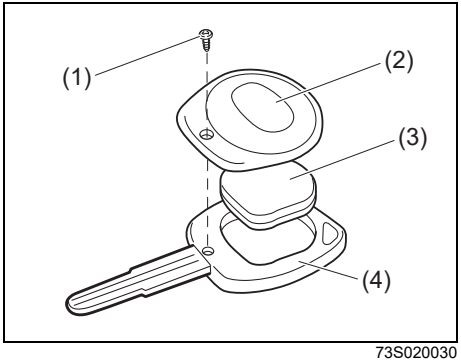

73S020030

1) Remove the screw (1), and open the transmitter cover (2).
2) Remove the transmitter (3) from the transmitter holder (4).

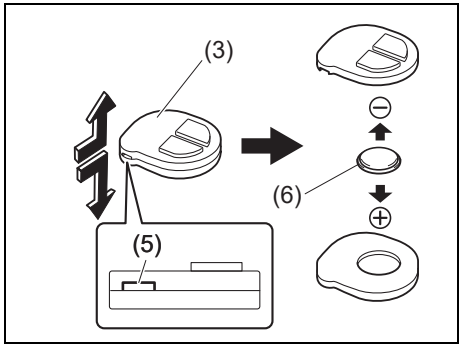

73S020010

(6) Lithium disc type battery: CR1616

3) Separate the case up and down while applying force to the slot (5) on the side of the transmitter (3).
4) Replace the battery (6) so its + terminal faces "**+**" mark of the transmitter.
5) Close the transmitter and install it into the transmitter holder (4).
6) Close the transmitter cover (2), install and tighten the screw (1).
7) Check that the door locks can be operated with the transmitter.
8) Dispose of the used battery properly according to applicable rules or regulations. Do not dispose of lithium batteries with ordinary household trash.

⚠ WARNING

Swallowing a lithium battery may cause serious internal injury. Do not allow anyone to swallow a lithium battery. Keep lithium batteries away from children and pets. If swallowed, contact a physician immediately.

NOTICE

- **The transmitter is a sensitive electronic instrument. To avoid damaging it, do not expose it to dust or moisture or tamper with internal parts.**
- **When replacing the battery by yourself, the transmitter controller could be damaged affected by static electricity. Discharge the static electricity built up in your body by touching metal before replacing the battery.**

NOTE:

- *Used batteries must be disposed of properly according to applicable rules or regulations and must not be disposed of with ordinary household trash.*
- *For handling the lithium battery in the country of Australia, refer to "For Australia" in the "SUPPLEMENT" section.*

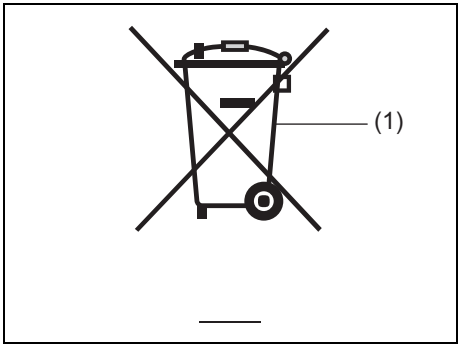

80JM133

(1) Crossed-out wheeled bin symbol

The crossed-out wheeled bin symbol (1) indicates that a used battery should be collected separately from ordinary household trash.

By ensuring the used battery is disposed of or recycled correctly, you will help prevent potential negative consequences for the environment and human health, which could otherwise be caused by inappropriate battery disposal. The recycling of materials will help to conserve natural resources. For more detailed information about disposing of or recycling of the used battery, consult an authorized SUZUKI dealer or a qualified workshop.

Keyless push start system remote controller (if equipped)

The remote controller enables the following operations:
- You can lock or unlock the doors by operating LOCK/UNLOCK buttons on the remote controller. Refer to the explanation in this section.
- You can lock or unlock the doors by pushing the request switch. For details, refer to the explanation in this section.
- You can start the engine without using an ignition key. For details, refer to “Engine switch (Vehicle with keyless push start system) (if equipped)” in “OPERATING YOUR VEHICLE” section.

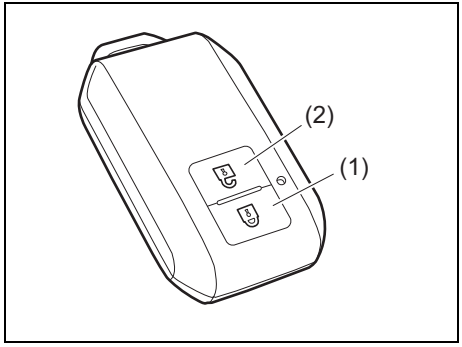

52RM20060

(1) LOCK button
(2) UNLOCK button

There are two ways to lock or unlock all doors (including the tailgate) simultaneously by operating the remote controller near the vehicle.

Central door locking system
- To lock all doors, push LOCK button (1) once.
- To unlock all doors, push UNLOCK button (2) once.

The turn signal lights will flash once and the exterior buzzer will sound once when the doors are locked.

When the doors are unlocked:
- The turn signal lights will flash twice and the exterior buzzer will sound twice.
- If the interior light switch is in DOOR position, the interior light will turn on for about 15 seconds and then fade out. If you press the engine switch during this time, the light will start to fade out immediately.

Check that the doors are locked after you operate LOCK button (1).

NOTE:
- *If no door is opened within about 30 seconds after UNLOCK button (2) is operated, the doors will automatically lock again.*
- *The maximum operating distance of the remote controller is about 5 m (16.4 ft.), but this can vary depending on the surroundings, especially near other transmitting devices such as radio towers or CB (Citizen’s Band) radios.*
- *The door locks cannot be operated with the remote controller if the ignition mode is other than the “LOCK” (OFF).*
- *When any door is open, if you push LOCK button on the remote controller, the exterior buzzer will sound and doors cannot be locked.*
- *If you lose one of the remote controllers, ask an authorized SUZUKI dealer or a qualified workshop as soon as possible for replacement. Have an authorized SUZUKI dealer or a qualified workshop for program the new remote controller code in your vehicle’s memory so that the old code is erased.*

Answer-back function

The answer-back function informs door locking/unlocking via keyless entry system.

Default setting (factory setting)

Answer-back function	When locked	When unlocked
Hazard warning light	Blinks once	Blinks twice
Interior light (when switch is in "DOOR" position)	–	Lights up for about 15 seconds

When changing the settings

Answer-back function	When locked	When unlocked
Hazard warning light	–	–
Interior light (when switch is in "DOOR" position)	Blinks twice	Lights up for about 15 seconds

- If you want the interior light to light up or blink at the same time as keyless entry system operation, set the interior light switch to the "DOOR" position.
- After the interior light turns on for about 15 seconds, it gradually dims and turns off automatically.
- For model equipped with the keyless push start system, the exterior buzzer will sound.

Default setting (factory setting)

Answer-back function	When locked	When unlocked
Exterior buzzer	Sounds once	Sounds twice

When changing the settings

Answer-back function	When locked	When unlocked
Exterior buzzer	–	–

NOTE:

- *For changing the settings (customizing) of the answer-back function, consult an authorized SUZUKI dealer or a qualified workshop.*
- *The answer-back function will operate when the vehicle is locked/unlocked by a request switch as well. Also, the following signs can be customized separately:*
  - *Sign by the hazard warning light and interior light*
  - *Sign by the exterior buzzer*

Keyless unlocking / locking using the request switches

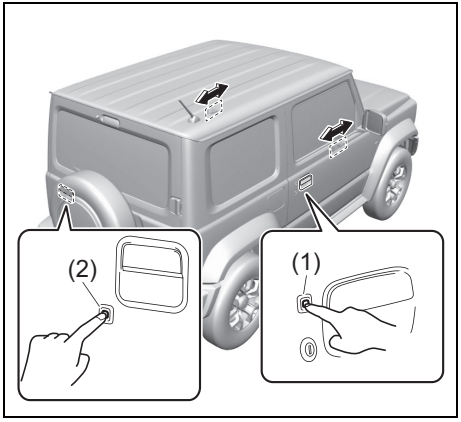

85U020010

When the remote controller is within the operating range described in this section, you can lock or unlock all the doors (including tailgate) by pushing the request switch (1) on the driver's door or front passenger's door or tailgate (2).

When all doors are unlocked:

- To lock all doors, push one of the request switches once.

The turn signal lights will flash once and the siren will sound once when the doors are locked.

To unlock a door or all doors:
• Push one of the request switches once.

When the doors are unlocked:
• The turn signal lights will flash twice and the exterior buzzer will sound twice.
• If the interior light switch is in DOOR position, the interior light will turn on for about 15 seconds and then fade out. If you press the engine switch during this time, the light will start to fade out immediately.

Check that the doors are locked after you operate the request switch to lock the doors.

NOTE:
- *The door locks cannot be operated by the request switch under the following conditions:*
  - *If any door is open or is not completely closed.*
  - *If the ignition mode is in any other mode than LOCK (OFF).*
- *If no doors are opened within about 30 seconds after unlocking the doors by pushing the request switch, the doors will be locked again automatically.*

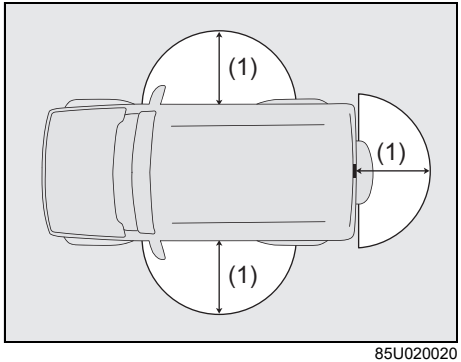

85U020020

(1) 80 cm (2.6 ft)

When the remote controller is within approximately 80 cm (2.6 ft) from a front door handle or the tailgate switch, you can lock or unlock the doors by pushing the request switch.

NOTE:
- *If the remote controller is outside the request switch operating range described above, you will not be able to operate the request switch.*
- *If the battery of the remote controller runs down or there are strong radio waves or noise, the request switch operating range may be reduced or the remote controller may be inoperative.*
- *If the remote controller is too close to the door glass, the request switches may not operate.*
- *If a spare remote controller is in the vehicle, the request switches may not operate normally.*
- *The remote controller will only operate a request switch if it is within the switch's operating range. For example, if the remote controller is within the operating range of the driver's door request switch but not the front passenger's door request switch or the tailgate request switch, the driver's door switch can be operated but the front passenger's door switch or tailgate switch cannot be operated.*
- *If the remote controller is located in the following places in the vehicle, the remote controller may be detected and the request switch may be activated depending on the radio wave condition, there is a risk of that the remote controller may be trapped inside the vehicle.*
  - *On the instrument panel*
  - *Floor*
  - *Luggage compartment*
  - *Deep in storage compartments such as the glove box or a door pocket, etc.*

NOTICE

The remote controller is a sensitive electronic instrument. To avoid damaging the remote controller:
- **Do not expose it to impacts, moisture or high temperature such as by leaving it on the dashboard under direct sunlight.**
- **Keep the remote controller away from magnetic objects such as a television.**

NOTE:
The keyless push start system may not function correctly in certain environments or under certain operating conditions such as the following:
- *When there are strong signals coming from a television, power station or a cellular phone.*
- *When the remote controller is in contact with or covered by a metal object.*
- *When a radio wave type remote keyless entry is used nearby.*
- *When the remote controller is placed near an electronic device such as personal computer.*

Some additional precautions you should take and information you should be aware of are:
- *Check that the key is stowed in the remote controller. If the remote controller becomes unusable, you will not be able to lock or unlock the doors.*
- *Check that the driver always carries the remote controller.*
- *If you lose one of the remote controllers, ask an authorized SUZUKI dealer or a qualified workshop as soon as possible for a replacement. Have an authorized SUZUKI dealer or a qualified workshop program the new remote controller code in your vehicle's memory so that the old code is erased.*
- *You can use up to four remote controllers and the keys for your vehicle. Ask an authorized SUZUKI dealer or a qualified workshop for details.*
- *The battery life of the remote controller is about two years, but it can vary depending on usage conditions.*

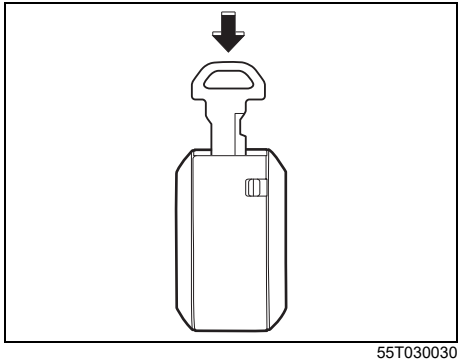

55T030030

To stow the key into the remote controller, push the key in the remote controller until you hear a click.

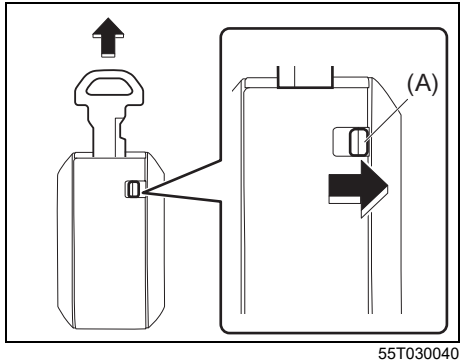

55T030040

To remove the key from the remote controller, slide the lock knob (A) in arrow direction and pull the key out from the remote controller.

Request switch warning buzzer
The exterior buzzer beeps for about 2 seconds in the following conditions to warn you that the request switch is not working:
- The request switch is pressed after all doors are closed with the ignition mode changed to ACC or ON position by pressing the engine switch when the remote controller is outside the vehicle.
- The request switch is pressed in any of the following conditions after changing the ignition mode to LOCK (OFF) by pressing the engine switch.
  – The remote controller is left inside the vehicle.

– Any door (including the tailgate) is open.

Press the request switch again after doing the following:
With the ignition mode changed to LOCK (OFF) by pressing the engine switch, bring out the remote controller if it is inside the vehicle and check that all doors are completely closed.

Reminder function

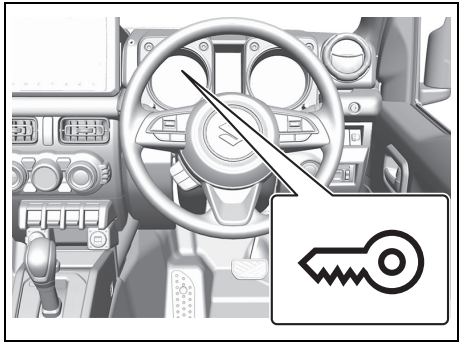

85U020030

If the remote controller is not in the vehicle under the following conditions, the buzzer sounds intermittently for about 2 seconds and the immobilizer/keyless push start system warning light on the instrument cluster blinks:
When one or more doors are opened and all of the doors are later closed with the ignition in any other mode than LOCK (OFF).

The indicator light will turn off within several seconds after the remote controller is returned to an area of the vehicle other than the rear luggage area.

If the remote controller is left in the vehicle and you lock the driver's door or front passenger's door as described below, the door will be automatically unlocked.

- If you open the driver's door and lock the door by turning the lock knob forward, the driver's door will be automatically unlocked.
- If you open the front passenger's door and lock the door by turning the lock knob forward, the front passenger's door will be automatically unlocked.

NOTE:

- *The reminder will not operate when the remote controller is on the instrument panel, in the glove box, in a storage compartment, in the sun visor or on the floor, etc.*
- *Check that the driver always carries the remote controller.*
- *Do not leave the remote controller in the vehicle when leaving the vehicle.*

Battery Replacement

⚠ WARNING

Swallowing a lithium battery may cause serious internal injury or death in the worst case. Do not allow anyone to swallow a lithium battery. Keep lithium batteries away from children and pets. If swallowed, contact a physician immediately.

NOTICE

- **The remote controller is a sensitive electronic instrument. To avoid damaging it, do not expose it to dust or moisture or tamper with internal parts.**
- **When you replace the battery by yourself, touch a metallic part and remove static electricity to prevent damaging the remote controller.**

NOTE:
- *Used batteries must be disposed of properly according to applicable rules or regulations and must not be disposed of with ordinary household trash.*
- *You may damage the remote controller when replacing its battery. Asking an authorized SUZUKI dealer or a qualified workshop is recommended.*
- *When you purchase the battery by yourself at an authorized SUZUKI dealer, a qualified workshop or the other stores, check the year of manufacture for the battery.*

If the remote controller becomes unreliable, replace the battery as follows:

NOTE:
You may damage the remote controller when replacing its battery. Asking an authorized SUZUKI dealer or a qualified workshop is recommended.

To replace the battery of the remote controller:

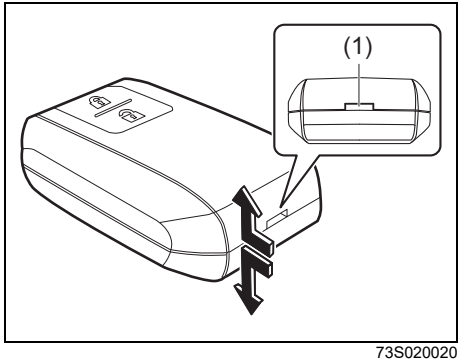

73S020020

1) Pull the key out from the remote controller.
2) Separate the remote controller up and down while applying force to the slot (1) on the side of the remote controller.

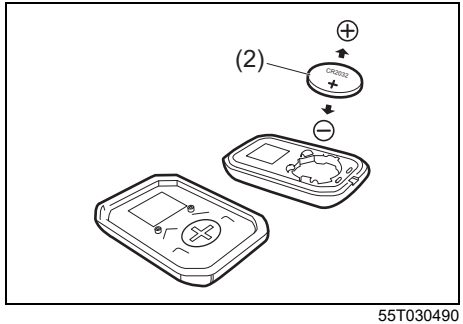

55T030490

(2) Lithium disc type battery: CR2032

3) Replace the battery (2) so its + terminal faces up as shown in the illustration.
4) Close the remote controller firmly.
5) Check that the door locks can be operated with the remote controller.
6) Dispose of the used battery properly according to applicable rules or regulations. Do not dispose of lithium batteries with ordinary household trash.

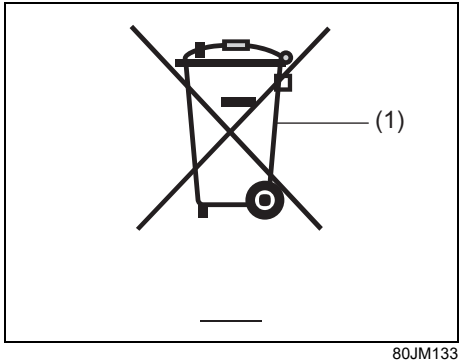

80JM133

(1) Crossed-out wheeled bin symbol

The crossed-out wheeled bin symbol (1) indicates that a used battery should be collected separately from ordinary household trash.

By ensuring the used battery is disposed of or recycled correctly, you will help prevent potential negative consequences for the environment and human health, which could otherwise be caused by inappropriate battery disposal. The recycling of materials will help to conserve natural resources. For more detailed information about disposing of or recycling of the used battery, consult an authorized SUZUKI dealer or a qualified workshop.

Theft deterrent alarm system (if equipped)

A theft deterrent alarm system is armed in about 20 seconds after you close and lock all doors (including engine hood and tailgate) by using the keyless entry transmitter, keyless push start system remote controller or pushing the request switch. Once the system is armed, any attempt to open a door by using any other means* than the keyless entry transmitter, keyless push start system remote controller, pushing the request switch or open the engine hood will cause the alarm to be triggered.

* These means include the following:
  – The key
  – The lock knob on a door

NOTICE
Do not modify or remove the theft deterrent alarm system. If modified or removed, the system cannot be properly operated.

NOTE:

- *The theft deterrent alarm system generates alarms when any of the predetermined conditions is met. However, the system does not have any function of blocking unauthorized entry into your vehicle.*
- *Always use the keyless entry system transmitter, keyless push start system remote controller or pushing the request switch to unlock the doors when the theft deterrent alarm system has been armed. Using a key instead will trigger the alarm.*
- *If a person who does not know the theft deterrent alarm system is going to drive your vehicle, we recommend you explain the system and its operation to the person, or disable the system beforehand. Mistakenly triggering the alarm may cause a nuisance to others.*
- *Even if the theft deterrent alarm system is armed, you should still be careful to guard against theft. Do not leave money or things of value in your vehicle.*
- *The theft deterrent alarm system is maintenance-free.*

How to arm the theft deterrent alarm system (when enabled)
Lock all doors (including the tailgate and engine hood) using the keyless entry system transmitter, keyless push start system rremote controller or the request switch. The theft deterrent light (1) will start blinking, and the theft deterrent alarm system will be armed in about 20 seconds.
While the system is being armed, the indicator continues to blink at intervals of approximately 2 seconds.

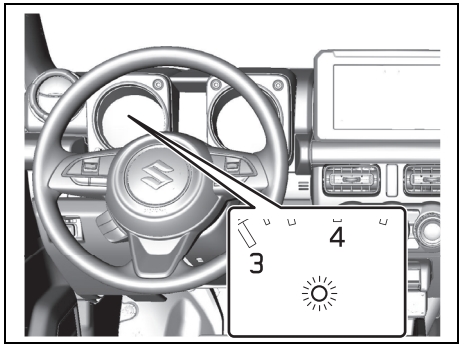

85U020370

NOTE:
- *To prevent the alarm from being accidentally triggered, avoid arming it while anyone remains inside the vehicle. The alarm will be triggered if any person inside unlocks a door by operating the lock knob.*
- *The theft deterrent alarm system is not armed when all doors are locked using the key from outside, or using the door lock knobs.*
- *If any door is not operated within approximately 30 seconds after the doors have been unlocked using the keyless entry system transmitter, keyless push start system remote controller or pushing the request switch, the doors are automatically locked again. After the doors are locked, the theft deterrent alarm system will be armed in about 20 seconds if the system is in the enabled state.*

How to disarm the theft deterrent alarm system
Simply unlock the doors using the keyless entry system transmitter, keyless push start system remote controller or pushing the request switch. The theft deterrent light will go out, indicating that the theft deterrent alarm system is disarmed.

How to stop the alarm
Should the alarm be triggered accidentally, the alarm will stop by the following operations.
- Turn the ignition switch to “ON” position or press the engine switch to change the ignition mode to ON in case of emergency.
- Unlock the doors using the keyless entry system transmitter, keyless push start system remote controller or request switch.

NOTE:
- *Even after the alarm has stopped, if you lock the doors using the keyless entry system transmitter, keyless push start system remote controller or request switch, the theft deterrent alarm system will be rearmed with a delay of about 20 seconds.*
- *If you disconnect the lead-acid battery while the theft deterrent alarm system is in the armed condition or the alarm is actually in operation, the alarm will be triggered or re-triggered when the battery is then reconnected, although, in the latter case, the alarm remains stopped*

for the period between disconnection and reconnection of the lead-acid battery.
- *Even after the alarm has stopped at the end of the predetermined operation time, it will be triggered again if any door is opened without disarming the theft deterrent alarm system.*

Checking whether the alarm has been triggered during parking
If the alarm was triggered due to an unauthorized entry into the vehicle and you then turn the ignition switch to “ON” position or press the engine switch to change the ignition mode to ON, the theft deterrent light will blink rapidly for about 8 seconds and a buzzer will beep 4 times during this period. If this happens, check whether your vehicle has been broken into while you were away from it.

Enabling and disabling the theft deterrent alarm system (if equipped)

The theft deterrent alarm system can be either enabled or disabled.

When enabled (factory setting)
When the system is enabled, it causes the hazard warning lights to flash for about 40 seconds if any of the alarm trigger conditions is met. The system also causes the interior buzzer to beep intermittently for about 10 seconds, which is followed by intermittent sounding of the horn for about 30 seconds.
The theft deterrent light continues to blink during this time.

When disabled
When the system is disabled, it stays disarmed even if you perform any system arming operation.

How to switch the state of the theft deterrent alarm system (if equipped)

You can switch the theft deterrent alarm system from the enabled state to the disabled state, and vice versa, using the following method.

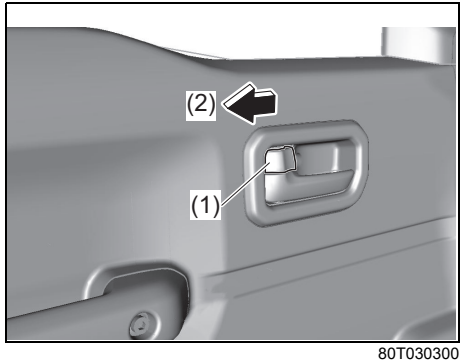

80T030300

1) Close all the doors and turn the lock knob (1) on the driver’s door in the unlocking direction (2) (rearward).

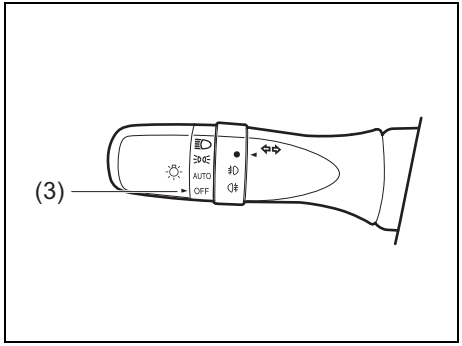

52RS20060

2) Turn the knob on the lighting control lever to “OFF” position (3).

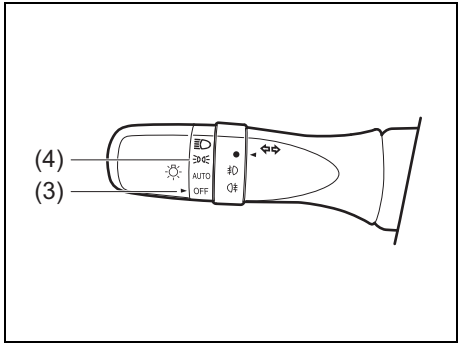

52RS20070

3) Turn the knob on the lighting control lever to the position (4) and then to “OFF” position (3). Repeat this operation 4 times with the control lever finally set to “OFF” position.

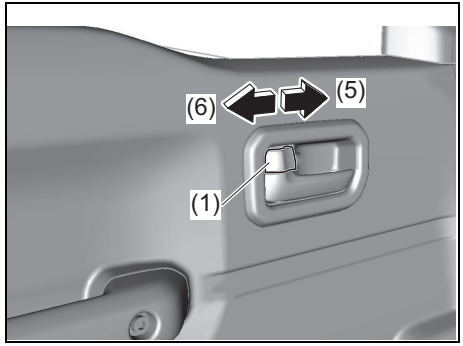

80T030310

(5) LOCK
(6) UNLOCK

4) Turn the lock knob (1) on the driver’s door forward (5) to lock the doors, and then turn rearward (6) to unlock the doors. Repeat this operation 3 times.

Every time you perform the series of the above steps, the state of the theft deterrent alarm system changes from the currently selected one to the other. You can check whether the system is enabled or disabled by the number of interior buzzer beeps at the end of the procedure as follows.

System state	Number of beeps
Disabled (Mode A)	Once
Enabled (Mode D)	4 times

NOTE:
- *You cannot disable the theft deterrent alarm system while it is in the armed condition.*
- *If you fail to complete the operations in Step 3) and 4) within 15 seconds, perform the procedure again from the beginning.*
- *You can also switch the theft deterrent alarm system from the enabled state to the disabled state, and vice versa, via the information display setting mode. For details on how to use the information display, refer to "Information display" in this section.*

Theft deterrent light (if equipped)

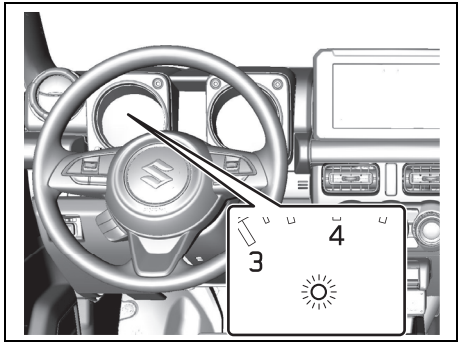

85U020370

This light will blink with the ignition switch in "LOCK" or "ACC" position. The blinking light is intended to deter theft by leading others to believe that the vehicle is equipped with a security system.

Windows

The electric windows can only be operated when the ignition switch is in "ON" position or the ignition mode is ON.

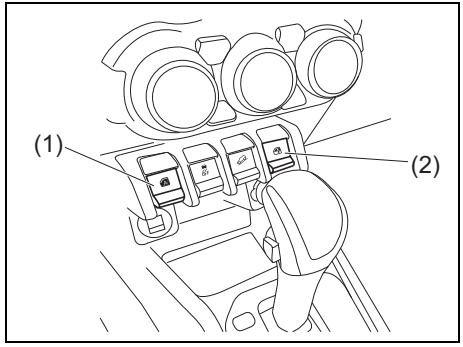

78RB02006

The center console has a switch (1) to operate the driver's window, and a switch (2) to operate the front passenger's window.

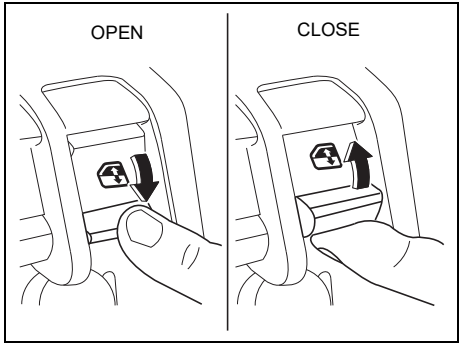

78RB02007

To open a window, push the switch. To close the window, lift up the switch.

The driver's window has AUTO-DOWN and AUTO-UP (if equipped) features for greater convenience (at toll booths or drive-through restaurants, for example). These features allow the driver to open or close the window without holding the window switch in DOWN or UP position. Press down or lift up the driver's window switch completely and release it. To stop the window before it reaches the FULL-DOWN or FULL-UP position, pull up or push down the switch briefly.

⚠ WARNING

- **You should always prevent children from operating the electric window switches when there are children in the vehicle. Children can be seriously injured if they get part of their body caught by the window during operation.**
- **To avoid injuring an occupant by window entrapment, check that no part of the occupant's body such as hands or head is in the path of the electric windows when closing them.**
- **Always remove the ignition key or press the engine switch to change the ignition mode to LOCK (OFF) when leaving the vehicle even only for a short time. Also do not leave children alone in a parked vehicle. Unattended children could use the electric window switches and get trapped by the window.**

Off-delay timer function for the driver's window

After you turn the ignition switch to "ACC" or "LOCK" position or press the engine switch to change ON mode to ACC or LOCK (OFF) mode, you can open or close the driver's window within 30 seconds.

NOTE:
Even within 30 seconds, if the driver's door or the passenger's door is opened, you cannot open or close the driver's window.

Pinching prevention function

The driver's window is equipped with a pinching prevention function. This function detects a foreign object that is caught in the window as it is being closed by AUTO-UP feature, which allows you to close the window without holding the window switch in UP position, and stops the window from closing to prevent damage.

⚠ WARNING

To avoid injuring an occupant by window entrapment, check that no part of the occupant's body such as hands or head is in the path of the electric window when closing it.
This function may not detect an object due to the size, hardness, or position of the object being caught in the closing window.

⚠ CAUTION

- **The pinching prevention function does not operate while you are holding the window switch in UP position.**
- **The pinching prevention function may not detect an object caught in the window just before the window is fully closed.**

NOTE:
Even if you cannot close the window by the AUTO-UP feature because there may be something wrong with the pinching prevention function, you can close the window by holding the window switch in UP position.
If you drive in extreme off-road condition, the pinching prevention function may operate accidentally because the window reacts to vehicle jolting.

Pinching prevention function initialization

When you disconnect and reconnect the lead-acid battery or replace the fuse, the function will be deactivated. In this condition, the AUTO-DOWN feature will be deactivated, while the AUTO-UP feature may remain activated. The pinching prevention function needs to be initialized.

To initialize the pinching prevention function, use the following procedure:

1) Turn the ignition switch to “ON” position or press the engine switch to change the ignition mode to ON.
2) Open the driver’s window fully by holding the window switch in DOWN position.
3) Close the driver’s window by holding the switch in UP position, and keep holding the switch for 2 seconds after the window is fully closed.
4) Check the driver’s window to see if the AUTO-DOWN/UP feature works.

⚠ WARNING

Whenever you disconnect and reconnect the lead-acid battery or replace the fuse, the pinching prevention function needs to be initialized.
The pinching prevention function will not be activated until the initialization is completed.

If the AUTO-DOWN/UP feature will not work after initialization, there might be something wrong with the pinching prevention function. Have your vehicle inspected by an authorized SUZUKI dealer or a qualified workshop.

Mirrors

⚠ WARNING

Never attempt to adjust the inside rearview mirror or the outside rearview mirror while driving.
Otherwise improper steering operation or inattention to the road may occur. This may lead to an accident.

Inside rearview mirror

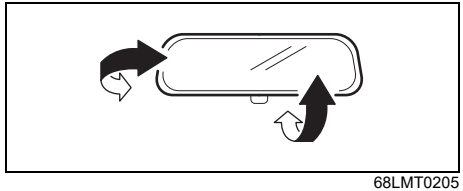

68LMT0205

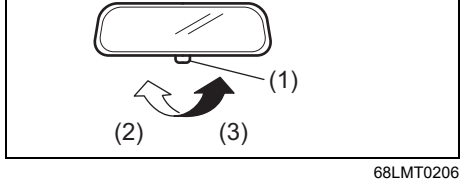

68LMT0206

(2) Day driving
(3) Night driving

You can adjust the inside rearview mirror by hand to see the rear of your vehicle in the mirror. To adjust the mirror, set the selector tab (1) to the day position, and then move the mirror up, down or sideways by hand to obtain the best view.

When driving at night, you can move the selector tab to the night position to reduce glare from the headlights of vehicles behind you.

⚠ WARNING

- **Always adjust the mirror with the selector set to the day position.**
- **Only use the night position if it is necessary to reduce glare from the headlights of vehicles behind you. Be aware that in this position you may not be able to see some objects that could be seen in the day position.**

Outside rearview mirrors

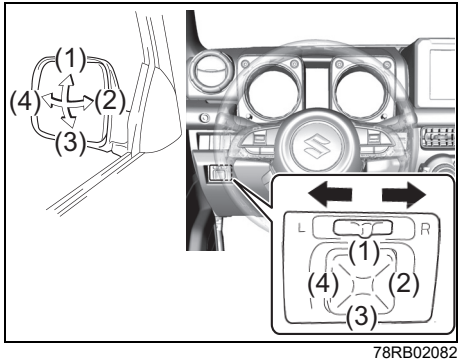

78RB02082

The switch to control the electric mirrors is located on the driver's door panel. You can adjust the mirrors when the ignition switch is in "ACC" or "ON" position or the ignition mode is ACC or ON. To adjust the mirrors:

1) Rotate the selector switch to the left or right to select the mirror you wish to adjust.
2) Push the side of the switch to the direction in which you wish to move the mirror.
3) Return the selector switch to the center position to prevent unintended mirror movement.

NOTE:
If your vehicle is equipped with the heated outside rearview mirrors, refer to "Heated rear window switch / heated outside rearview mirror switch (if equipped)" in this section.

Outside rearview mirrors folding switch (if equipped)

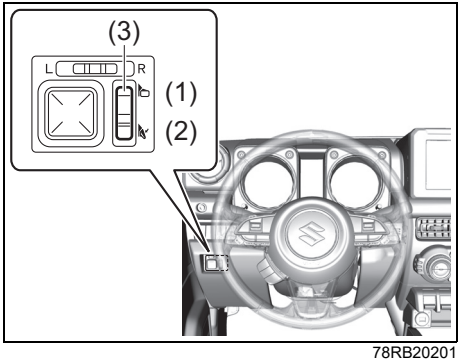

78RB20201

(1) Unfold
(2) Fold

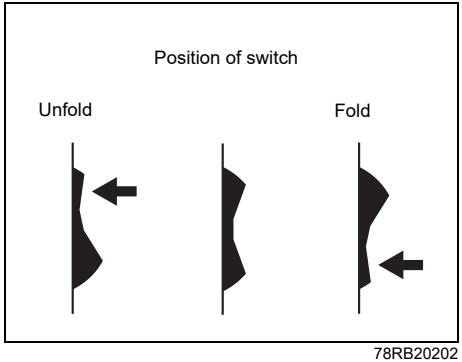

78RB20202

You can fold the mirrors when you park the vehicle in a narrow space. Push the folding switch (3) to fold and unfold the mirrors. Make sure the mirrors are completely unfolded before you start driving.

⚠ CAUTION

Moving mirrors can pinch and injure a hand. Do not allow anyone's hand to get near the mirrors when folding and unfolding the mirrors.

Remote folding mirrors (if equipped)

When the outside rearview mirror folding switch is in the unfolded position, the outside rearview mirrors are folded or unfolded in conjunction with the door locking or engine switch operation.

- When you lock the doors (including the tailgate) by using the remote controller or pushing the request switch, the mirrors will be folded automatically.
- To unfold the mirrors, push the engine switch to change the ignition mode to ACC or ON.
- The factory setting is that the function is enabled. You can switch the function from enabled to disabled, and vice versa. To switch the function for your preference, refer to "How to switch the remote folding mirror function" in this section.

NOTICE

In a cold winter such as the mirrors are frozen, disable the function. If the mirrors are folded and unfolded repeatedly without thawing, the mirrors may be damaged.

NOTE:

- *If the doors are locked by using the key or lock knob, the mirrors will not be folded automatically.*
- *If the outside rearview mirror folding switch is in the folded position, the mirrors will not be unfolded automatically, even when the engine switch is pushed to change the ignition mode to ACC or ON.*
- *If any of the doors is not opened within about 30 seconds after the doors are unlocked by using the keyless push start system remote controller or request switch, the doors will be locked again and the mirrors will be folded automatically.*

How to switch the remote folding mirror function

When the ignition mode is LOCK (OFF), you can switch the function from the enabled state to the disabled state, and vice versa, using the following method.

1) Sit in the driver's seat and make sure that all doors are closed.
   • If any door is open, the open door warning light comes on.

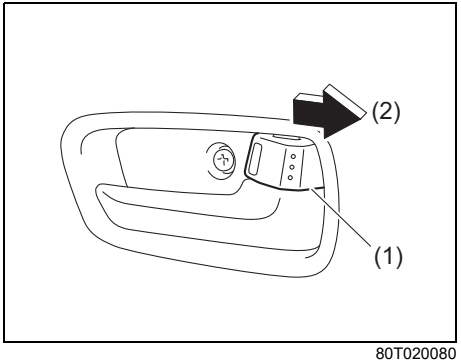

80T020080

2) Turn the lock knob (1) on the driver's door rearward (2).

NOTE:
All operations included in the following steps 3) and 4) must be completed within 15 seconds.

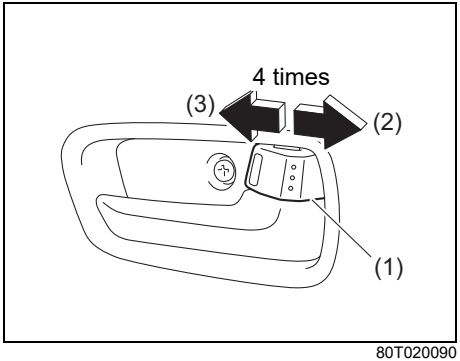

80T020090

3) Turn the lock knob (1) on the driver's door forward (3) to lock the doors, and then turn rearward (2) to unlock the doors. Repeat this operation 4 times.

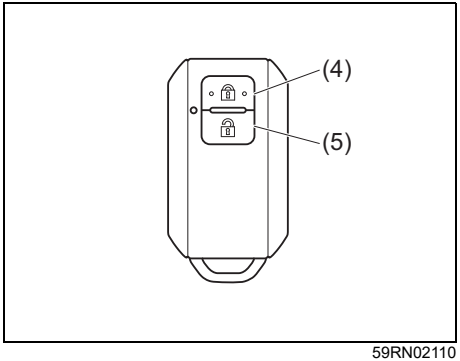

59RN02110

(4) LOCK button
(5) UNLOCK button

4) Push any of the buttons on the keyless push start system remote controller 3 times.
   • Push any buttons described above you like.
   • During operation, the doors are not locked, unlocked, opened or closed.

Every time you perform the series of the above steps, the state of the remote folding mirror function changes from the currently selected one to the other. You can check whether the system is enabled or disabled by the number of interior buzzer beeps at the end of the procedure as follows.

System state	Number of beeps
Disabled	Once
Enabled	

If you cannot complete the operations in step 3) and 4) within 15 seconds correctly, the state of the remote folding mirror function will not change and the interior buzzer does not beep. Perform the procedure again from the beginning.

Instrument cluster

(1) Speedometer
(2) Tachometer
(3) Information display
(4) Trip meter selector knob
(5) Indicator selector knob
(6) Warning and indicator lights

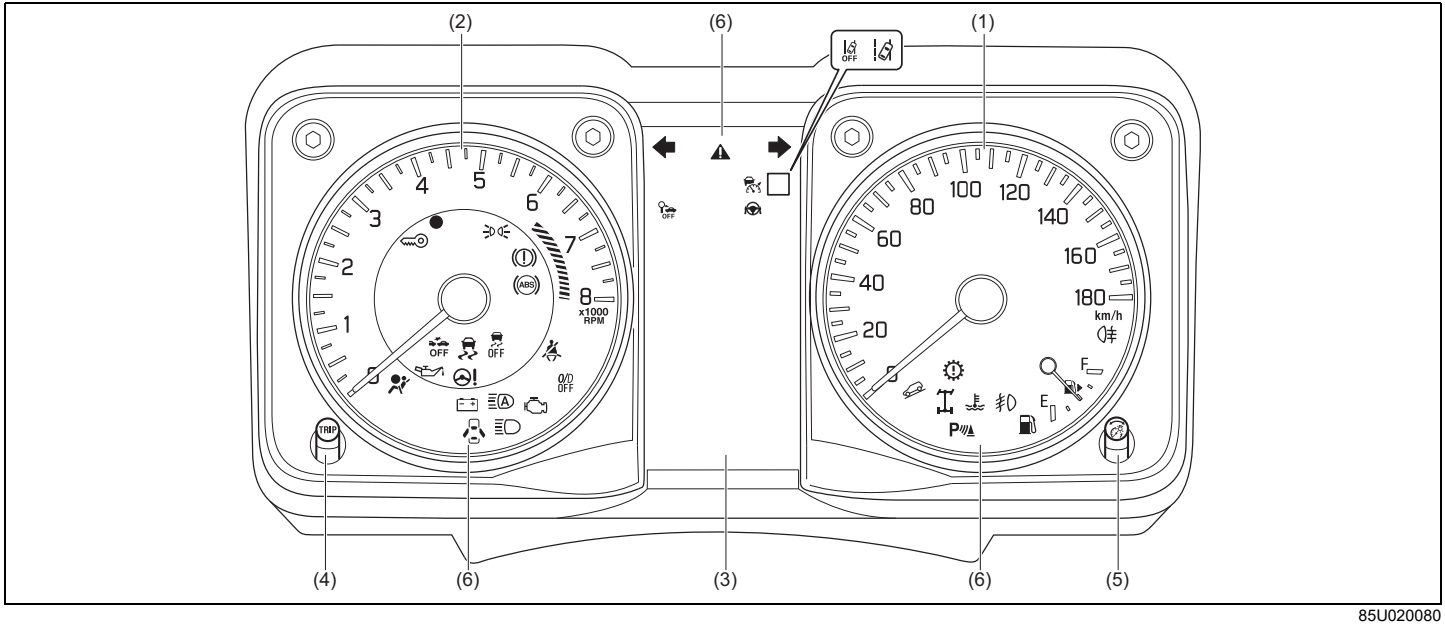

85U020080

Speedometer

The speedometer indicates vehicle speed.

Tachometer

The tachometer indicates engine speed in revolutions per minute.

NOTICE

Never drive the vehicle with the engine revving in the red zone or severe engine damage can result.
Keep the engine speed below the red zone even when downshifting to a lower gear position.
Refer to "Downshifting maximum allowable speeds" in "OPERATING YOUR VEHICLE" section.

Fuel gauge

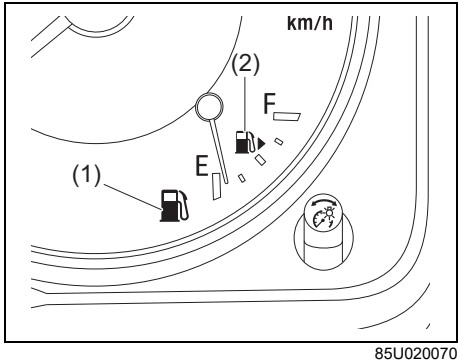

85U020070

When the ignition switch is turned "ON" or the ignition mode is ON, this gauge gives a rough indication of the amount of fuel in the fuel tank. "F" stands for full and "E" stands for empty.

If the indicator approaches a low level (near "E") on fuel gauge, refill the tank as soon as possible.

NOTE:
The indicator moves a little depending on road conditions (for example, slope or curve) and driving conditions because of fuel movement in the tank.

If the low fuel warning light (1) comes on, refill the fuel tank as soon as possible.

Refer to "Low fuel warning light" in "Warning and indicator light" in this section for details.

The mark (2) indicates that the fuel filler door is located on the right side of the vehicle.

Brightness control

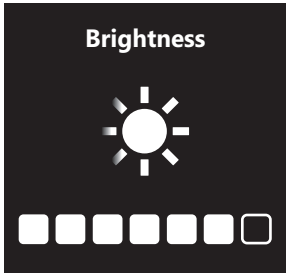

69T040510

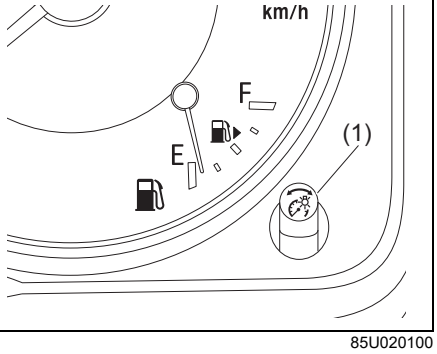

85U020100

When the ignition switch is turned “ON” or the engine switch is pressed to change the ignition mode to ON, the instrument panel lights come on.

Your vehicle has a system to automatically dim the brightness of the instrument panel lights when the position lights or headlights are on.

When the position lights and/or headlights are on, you can adjust the meter illumination brightness.

To increase the brightness of the instrument panel lights, turn the indicator selector knob (1) clockwise.

To reduce the brightness of the instrument panel lights, turn the indicator selector knob (1) counterclockwise.

⚠ WARNING

Do not adjust the brightness of the instrument panel lights while driving. Otherwise, you could lose control of the vehicle.

NOTE:

- *If you do not turn the knob within several seconds, the brightness control display will be canceled automatically.*
- *When you reconnect the lead-acid battery, the brightness of the instrument panel lights will be reinitialized. Readjust the brightness according to your preference.*

NOTE:

- *If you adjust to the maximum brightness level when the position lights or headlights are on, the following functions will be cancelled.*
  - *The function which automatically dims the brightness of instrument panel lights*
  - *The function which operates with the brightness control, except maximum brightness level*
- *In the vehicle equipped with infotainment system, the screen becomes the daytime screen (bright color) when the instrument panel lights brightness is maximized.*

Information switch

You can use the information switch to switch the display indication when the ignition switch is in “ON” position or press the engine switch to change the ignition mode to ON and the vehicle is stationary.

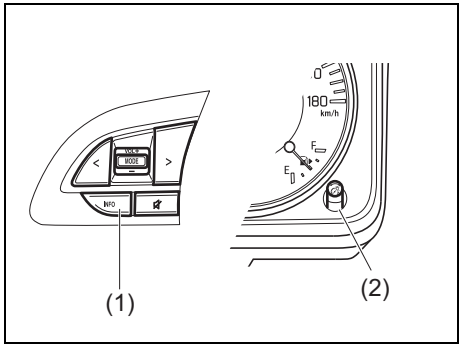

85U020130

(1) Information switch
(2) Indicator selector knob

To switch to the setting mode

1) Push and hold the information switch (1) when the vehicle is stationary.
2) After the display of setting mode is shown, select the setting item that you want to change by turning the indicator selector knob (2) left or right. Refer to “Setting mode” in this section for details.

NOTE:
If you switch to the setting mode while either of the following items is shown on the information display, the current value will be reset. If you do not want to reset its value, push the indicator selector knob (2) quickly beforehand and switch to the other item.

- *Average fuel consumption*
- *Driving time*
- *Average speed*

To exit the setting mode

1) To exit the setting mode, select “Back” and push the indicator selector knob (2).
2) Push the information switch (1) quickly.

NOTE:
You can exit the setting mode by either of the following operations:

- *Turn the ignition switch to “ACC” or “LOCK” position or press the engine switch to ACC or LOCK (OFF) mode.*
- *Start driving your vehicle.*

Information display

The information display is shown when the ignition switch is in “ON” position or press the engine switch to change the ignition mode to ON.

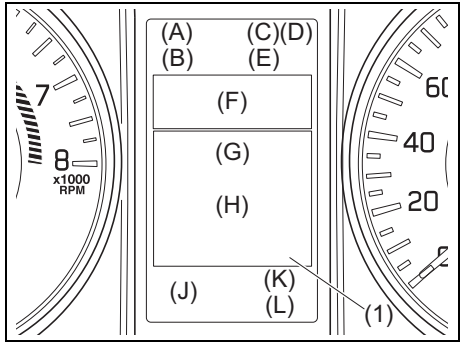

85U020140

(1) Information display

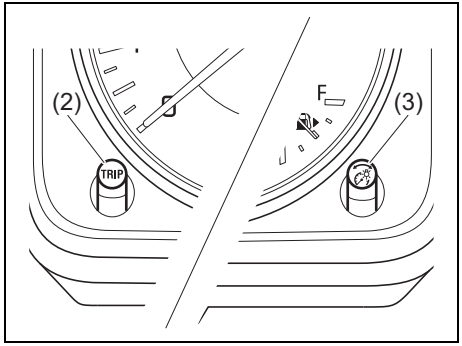

85U020150

(2) Trip meter selector knob
(3) Indicator selector knob

The information display shows the following information.

Display (A)
Clock

Display (B)
Traffic sign recognition OFF indicator light (if equipped) /

Display (C)
Adaptive cruise control indicator light

Display (D)
Lane departure prevention indicator light (if equipped) / Lane departure prevention OFF indicator light (if equipped)

Display (E)
Steering assist indicator light (if equipped)

Display (F)
Traffic sign recognition (if equipped) / Following distance indicator / Preceding vehicle mark of adaptive cruise control / Set speed / Lane departure warning / Dual Sensor Brake Support II (DSBS II) warning

Display (G) and (H)
Warning and indicator messages / Fuel consumption / Driving range / Average speed / Driving time / Total idling stop time and total idling fuel saved (if equipped) / Clock and date / Motion / Torque and power / Accelerator and brake / Vehicle speed / Adaptive cruise control / Dual Sensor Brake Support II (DSBS II) / Lane departure prevention system (if equipped)

Display (J)
Selector position (for Automatic transmission models)

Display (K)
Rear passenger's seat belt reminder / Outside temperature

Display (L)
Odometer / Trip meter

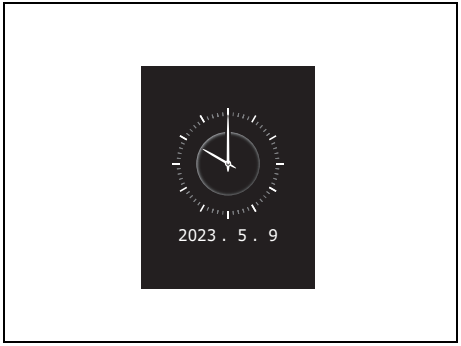

85U020170

When the ignition switch is turned "ON" or press the engine switch to change the ignition mode to ON, the display shown in the above illustration will appear on the display for several seconds.
Some warning and indicator messages may appear on the display when the ignition switch is in "ACC" or "LOCK" or press the engine switch to ACC or LOCK (OFF) mode.

Clock

When the ignition switch is in “ON” or press the engine switch to change the ignition mode to ON, the display (A) shows the time.

To set the clock, follow “Setting mode” instructions in this section.

⚠ WARNING

If you attempt to adjust the display while driving, you could lose control of the vehicle.
Do not attempt to adjust the display while driving.

Thermometer

When the ignition switch is “ON” or the ignition mode to ON, the display (K) shows the thermometer.
The thermometer indicates the outside temperature.

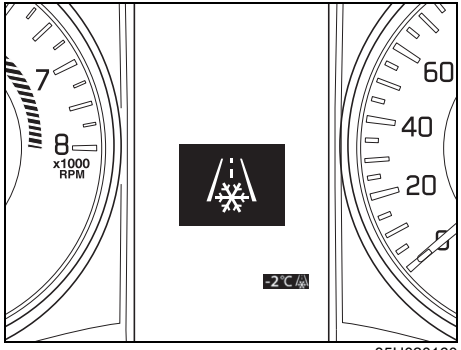

85U020160

If the outside temperature nears freezing condition, the mark (a) will appear on the display.

NOTE:
- *The outside temperature indication is not the actual outside temperature when driving at low speed, or when stopped.*
- *If there is something wrong with the thermometer, or just after the ignition switch is turned “ON” or press the engine switch to change the ignition mode to ON, the display may not indicate the outside temperature.*

When the display (C) shows the driving range, you can change the unit of temperature.
To change the unit of temperature, refer to “Setting mode” in this section.

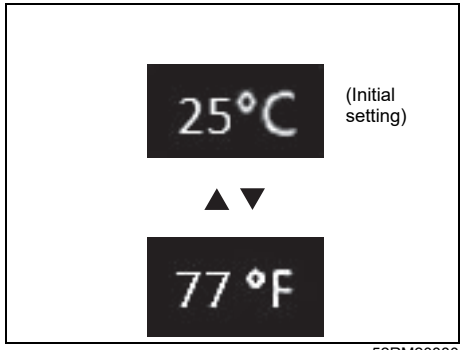

52RM20880

Changing the information display

When there are no warning or indicator messages on the display (H), you can select one of the following indications to appear on the display: instantaneous fuel consumption, average fuel consumption, driving range, average speed, driving time, total idling stop time and total idling fuel saved (if equipped), clock and date, motion, torque and power, accelerator and brake, vehicle speed, intersection guidance (if equipped) or no indication (or SUZUKI SAFETY SUPPORT image and message).

⚠ WARNING

If you attempt to adjust the display while driving, you could lose control of the vehicle. Do not attempt to adjust the display while driving.

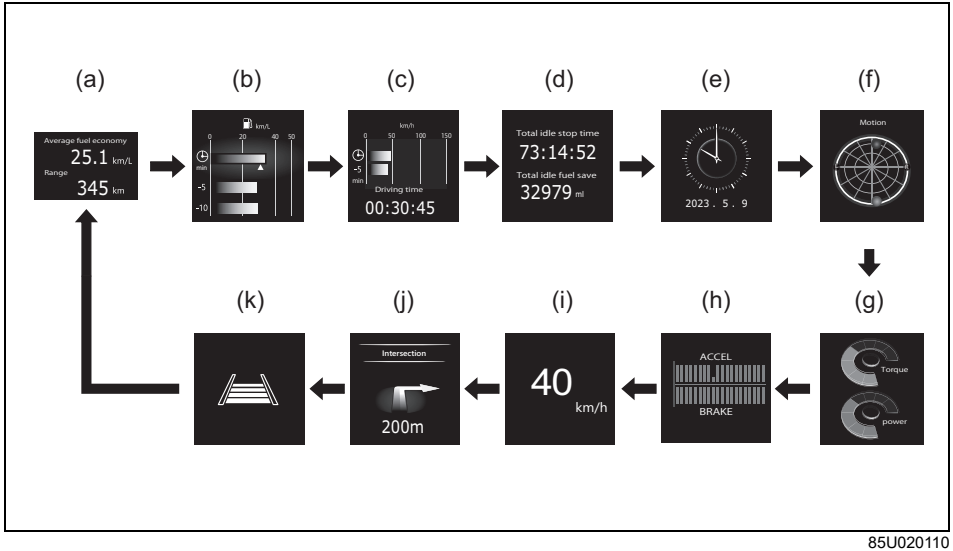

85U020110

(a) Instantaneous fuel consumption / Average fuel consumption / Driving range
(b) Instantaneous fuel consumption / Average fuel consumption / 5-minute average fuel consumption
(c) Average speed / 5-minute average speed / Driving time
(d) Total idling stop time and total idling fuel saved (if equipped)
(e) Clock and date
(f) Motion
(g) Torque and power
(h) Accelerator and brake
(i) Vehicle speed
(j) Intersection guidance (if equipped)
(k) No indication or SUZUKI SAFETY SUPPORT image and message

To switch the display indication, push the indicator selector knob (3) quickly.

NOTE:
The value of instantaneous fuel consumption, average fuel consumption, driving range, average speed, torque and power, accelerator and brake, motion and total idling fuel saved on the display are affected by the following conditions;
- *road condition*
- *surrounding traffic condition*
- *driving condition*
- *vehicle condition*
- *a malfunction which causes the malfunction indicator light to come on or blink*

Instantaneous fuel consumption
The display shows instantaneous fuel consumption with a bar graph only when the vehicle is moving.

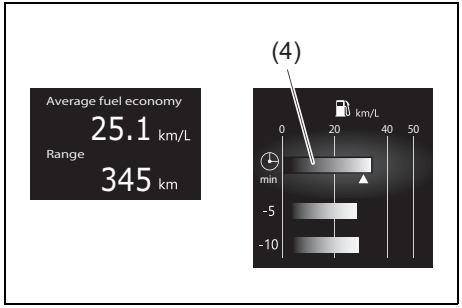

85U020260

(4) Instantaneous fuel consumption

NOTE:
- *The display does not show the bar graph unless the vehicle is moving.*
- *Depending on the vehicle's specification, the fuel consumption units of initial setting are indicated as L/100km, km/L or MPG.*
- *For "L/100km" setting, the indicated maximum value of instantaneous fuel consumption is 30. No more than 30 will be indicated on the display even if the actual instantaneous fuel consumption is higher.*
- *For "km/L" setting, the indicated maximum value of instantaneous fuel consumption is 50. No more than 50 will be indicated on the display even if the actual instantaneous fuel consumption is higher.*
- *For "MPG(UK)" setting, the indicated maximum value of instantaneous fuel consumption is 80. No more than 80 will be indicated on the display even if the actual instantaneous fuel consumption is higher.*
- *The indication on the display may be delayed if fuel consumption is greatly affected by driving conditions.*
- *The display shows estimated values. Indications may not be the same as actual values.*

Average fuel consumption / 5-minute average fuel consumption / 1-driving cycle average fuel consumption
Average fuel consumption from previous reset and 5-minute average fuel consumption, and 1-driving cycle average fuel consumption are shown.

(Average fuel consumption)

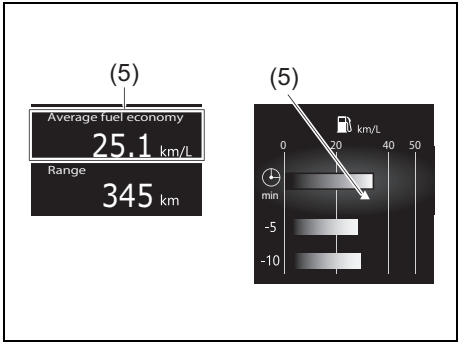

85U020270

(5) Average fuel consumption

If you selected average fuel consumption the last time you drove the vehicle, the display shows the last value of average fuel consumption from previous driving when the ignition switch is turned "ON" or the engine switch is pressed to change the ignition mode to ON. Unless you reset the value of average fuel consumption, the display indicates the value of average fuel consumption based on the average fuel consumption during previous driving.

NOTE:
When you reconnect the negative (–) terminal to the lead-acid battery, the value of average fuel consumption will be shown after driving for a period of time.

You can select the timing to reset the value of average fuel consumption by one of the following three methods;
- Reset after refuel: the value of average fuel consumption will be reset automatically by refueling.
- Reset with trip meter A: the value of average fuel consumption will be reset automatically by resetting trip meter A.
- Reset manually: the value of average fuel consumption will be reset by pushing and holding the indicator selector knob (3) when the display indicates the average fuel consumption.

To change the timing to reset the value of average fuel consumption, refer to “Setting mode” in this section.

NOTE:
If you add only a small amount of fuel when you select “After refuel”, the average fuel consumption value may not be reset.

(5-minute average fuel consumption)

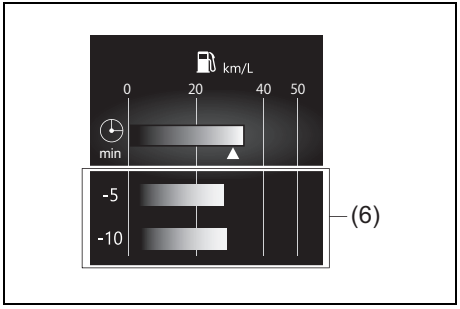

85U020280

(6) 5-minute average fuel consumption

(1-driving cycle average fuel consumption)

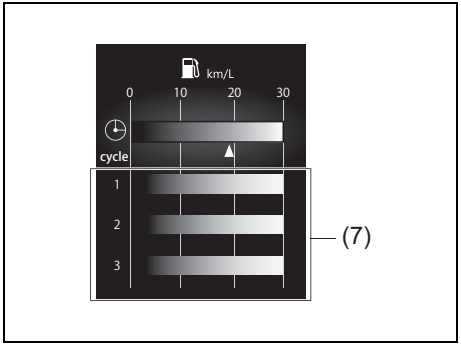

69T040390

(7) 1-driving cycle average fuel consumption

You can check transition of average fuel consumption every 5 minutes from 15 minutes before up to now. Also, you can check transition of average fuel consumption the past 3 driving cycles. Time indication and driving cycle indication can be changed. For details, refer to “Setting mode” in this section.

Driving range

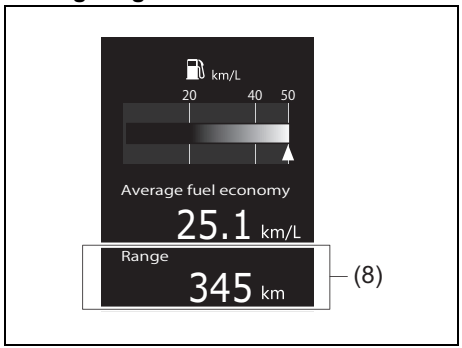

85U020290

(8) Driving range

If you selected driving range the last time you drove the vehicle, the display indicates "---" for a few seconds and then indicates the current driving range when the ignition switch is turned "ON" or the engine switch is pressed to change the ignition mode to ON.

The driving range shown in the display is the approximate distance you can drive until the fuel gauge indicates "E", based on current driving conditions.

When the low fuel warning light comes on, the display "---" will appear.
If the low fuel warning light comes on, fill the fuel tank immediately regardless of the value of driving range shown in the display.

When you refuel, the driving range is updated. However, if you only add a small amount of fuel, the correct value will not be displayed.

NOTE:
- *If you refuel when the ignition mode is ON, the driving range may not indicate the correct value.*
- *When you reconnect the negative (–) terminal to the lead-acid battery, the value of driving range will be shown after driving for a period of time.*

Average speed / 5-minute average speed
Average speed from previous reset and 5-minute average speed are shown.

(Average speed)

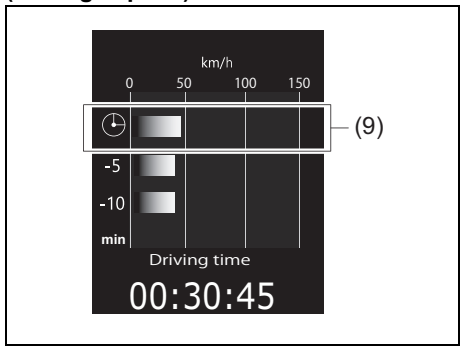

85U020300

(9) Average speed

If you selected average speed the last time you drove the vehicle, the display indicates the last value of average speed from previous driving when the ignition switch is turned "ON" or the engine switch is pressed to change the ignition mode to ON. Unless you reset the value of average speed, the display indicates the value of average speed which includes average speed during previous driving.

To reset the value of average speed, push and hold the indicator selector knob (3) for about 2 seconds when the display indicates an average speed. The display shows "---" and then indicates a new average speed after driving for a short time.

NOTE:
When you reconnect the negative (–) terminal to the lead-acid battery, the value of average speed will be shown after driving for a period of time.

(5-minute average speed)

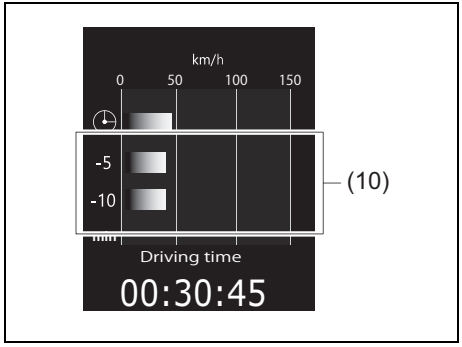

85U020310

(10) 5-minute average speed

You can check transition of 5-minute average speed every 5 minutes from 10 minutes before up to now.

Driving time

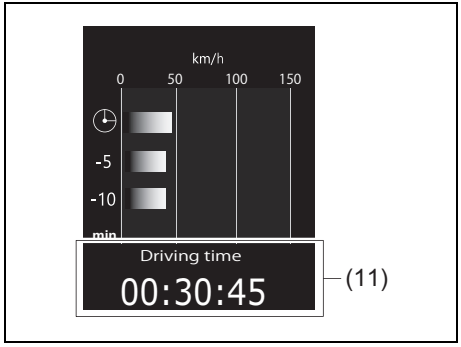

85U020320

(11) Driving time

Driving time from previous reset is shown. To reset the driving time, push and hold the indicator selector knob (3) for about 2 seconds when the display indicates a driving time. The display shows "---" and then indicates a new driving time after driving for a short time.

NOTE:
- *Disconnection of the lead-acid battery negative (-) terminal will reset the indication of the driving time.*
- *The indicated maximum value of driving time is 99:59:59. No more than this value will be indicated on the display until you reset the driving time.*

Total idling stop time and total idling fuel saved (if equipped)

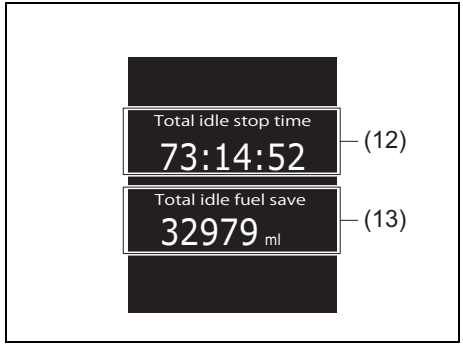

69T040440

(12) Total idling stop time
(13) Total idling fuel saved

The display shows the total length (in hours, minutes and seconds) of engine stopping time and the total amount (in milliliters) of fuel conservation by Idling stop system since the indication was reset.
- To reset the total idling stop time and the total idling fuel saved, push and hold the indicator selector knob (3) for a while when the display shows the total idling stop time and the total idling fuel saved.

NOTE:
- *The indicated maximum value of the total idling stop time is 99:59:59 and this value is fixed until it is reset.*

- *When you reconnect the negative (–) terminal to the lead-acid battery, the value of the total idling stop time and the total idling fuel saved will be reset.*

Clock and date
Date and time are shown. For the setting procedure, refer to “Setting mode” in this section.

Motion

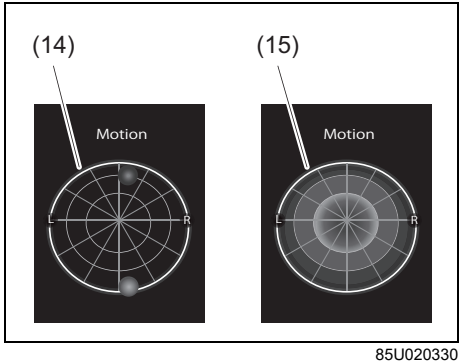

85U020330

This indicates how the center of gravity is moved while driving.
G (acceleration of gravity) position applied to the vehicle body while driving is shown by a globe (14).
When the vehicle is stopped, historical data of G positions applied to the vehicle body during the driving is shown as a graph (15).
G position history graph at the vehicle stopped can be changed to indicate or hide. For details, refer to “Setting mode” in this section.

⚠ WARNING

Do not look in the display while driving. Doing so may result in an accident.

NOTE:
- *If G position history graph at the vehicle stopped has been set in indication mode, the graph (15) is shown for several seconds when you change the ignition switch to “LOCK” or the ignition mode to LOCK (OFF) after driving.*
- *The graph is shown approximately and the actual movement may differ.*

Torque and power
Present engine torque and power are shown.

Accelerator and brake
Present accelerator pedal depressing degree and brake line pressure are shown. The display is selectable to indicate or not to indicate. For details, refer to “Setting mode” in this section.

Vehicle speed
Vehicle speed is shown.
You can change the unit of velocity that vehicle speed is displayed in. Refer to “Setting mode” in this section.

NOTE:
Displayed vehicle speed may differ a little from the speed meter indication.

Information shown after driving
When you turn the ignition switch to “LOCK” or press the engine switch to change the ignition mode to LOCK (OFF), the following information appears for several seconds on the information display.

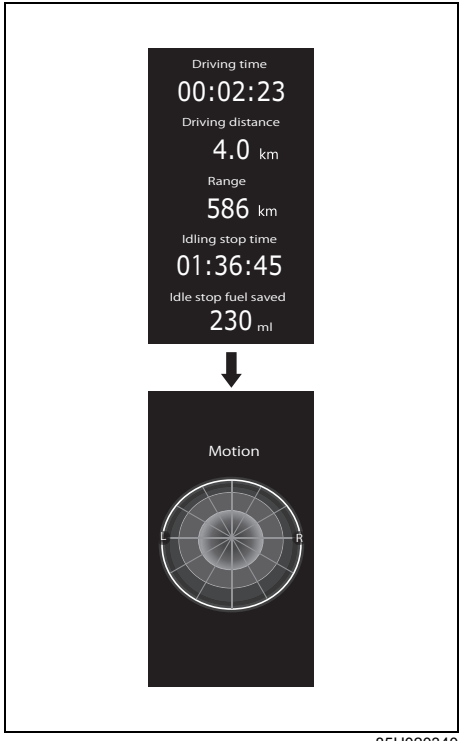

85U020340

Intersection Guidance (When using Android Auto™*1 or Apple CarPlay*2 on infotainment system (if equipped)



70TH01014

The display shows the direction of your driving and the distance, working with the infotainment system.

NOTE:
- *A slight time lag may occur between the intersection guidance on the information display and the guidance from the infotainment system.*
- *You can display or hide the intersection guidance by changing the setting (customization) in some specifications. For details, refer to “Setting mode” in this section.*

*1: Android Auto™ may not be available in your country or region. For details about Android Auto™, refer to http://support.google.com/androidauto
*2: Apple CarPlay may not be available in your country or region. For details about Apple CarPlay, refer to https://www.apple.com/ios/carplay/

Selector position (for Automatic transmission vehicles)

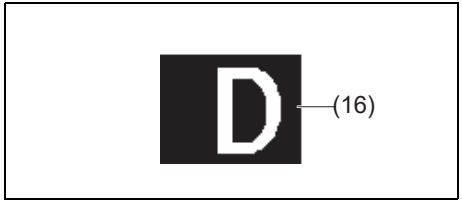

85U020120

(16) Selector position

The display shows the transmission selector position (16).

NOTE:
When the ignition switch is turned "ON", the engine switch is pressed to change the ignition mode to ON, or the selector position is changed, the display may not indicate current selector position immediately, but it is not a malfunction.

Trip meter / Odometer

The display (L) shows one of the following indications; odometer, trip meter A or trip meter B.
To switch the display indication (L), push the trip meter selector knob (2).

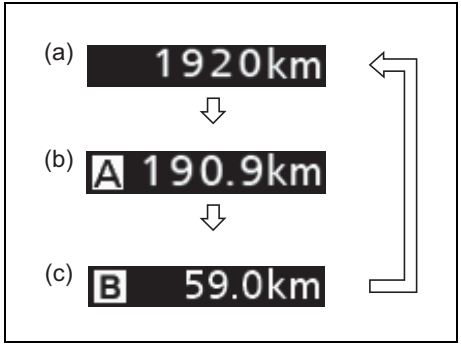

80SM02060

⇧ ⇩	Push the trip meter selector knob (2).

(a) Odometer
(b) Trip meter A
(c) Trip meter B

⚠ WARNING

If you attempt to adjust the display while driving, you could lose control of the vehicle.
Do not attempt to adjust the display while driving.

Trip meter
The trip meter can be used to measure the distance traveled on short trips or between fuel stops.
You can use trip meter A or trip meter B independently.

To reset the trip meter, push and hold the trip meter selector knob (2) until the display shows 0.0.

NOTE:
The indicated maximum value of the trip meter is 9999.9. When you run past the maximum value, the indicated value will return to 0.0.

Odometer
The odometer records the total distance the vehicle has been driven.

NOTICE

Keep track of your odometer reading and check the maintenance schedule regularly for required services. Increased wear or damage to certain parts can result from failure to perform required services at the proper mileage intervals.

Rear passenger's seat belt reminder

Refer to "Seat belts and child restraint systems" in the "FOR SAFE DRIVING" section for details.

Setting mode

When the ignition switch is "ON" or the ignition mode is ON and the vehicle is stationary, you can enter the setting mode of the information display.

To switch to the setting mode

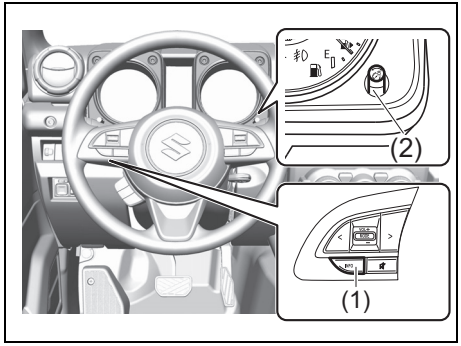

85U020220

(1) Information switch
(2) Indicator selector knob

3) Push and holding the information switch (1) or indicator selector knob (2) for more than 3 seconds.
4) After the display of setting mode is shown, select the setting item that you want to change by turning the indicator selector knob (2) left or right. Refer to "Setting items" in this section.

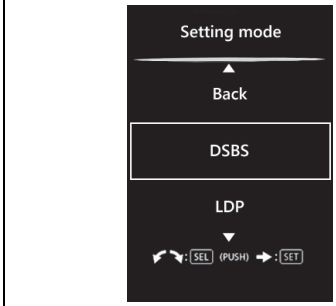

69T120100

NOTE:

- *The currently selected setting item is surrounded by a frame.*
- *If you push and hold the indicator selector knob (2) to enter into the setting mode when the display (G) and (H) show average fuel consumption, average speed, driving time, total idling stop time and total idling fuel saved (if equipped), the value will be reset simultaneously. If you do not want to reset the value, push the indicator selector knob quickly to switch the indication of the display.*
- *If you turn the ignition switch, press the engine switch or start to move the vehicle when the display is in the setting mode, the setting mode will be canceled automatically.*

To exit the setting mode

1) Push the indicator selector knob (2) and select “Back”.
2) Push the information switch (1) quickly.

NOTE:
You can exit the setting mode by either of the following operations:
- *Turn the ignition switch to “ACC” or “LOCK” or press the engine switch to change the ignition mode to ACC or LOCK (OFF).*
- *Start driving your vehicle.*

Setting items

NOTE:
The items that can be changed in setting mode depends on the country or region.

Item		Customization
Clock	Adjust clock	Refer to “Adjusting the clock” in this section.
	12H/24H	12H or 24H
	Adjust date	Refer to “Adjusting the date” in this section.
DSBS	Warning timing	Earlier / Default / Later
LDP (Lane departure prevention system)	Warning mode	Vibration / Buzzer
	Warning timing	Earlier / Default
	Swaying warning	“ON” / “OFF”
ACC	Traffic sign linking	“ON” / “OFF”
	Speed limit offset	–5 km/h / –4 km/h / –3 km/h / –2 km/h / –1 km/h / 0 km/h / 1 km/h / 2 km/h / 3 km/h / 4 km/h / 5 km/h
	Acceleration	Low / Mid / High
	Speed (Short push)	±1 km/h / ±5 km/h / ±10 km/h
	Speed (Long push)	±1 km/h / ±5 km/h / ±10 km/h
	Corner speed reduction	Off / Low / Mid / High

Item		Customization
TSR	Traffic sign recognition	“ON” / “OFF”
	Excess speed warn method	Both visual & audible / Visual only / No notification
	Speed limit update buz.	“ON” / “OFF”
	Excess speed warn level	1 km/h / 3 km/h / 5 km/h
		2 km/h / 5 km/h / 10 km/h
Door lock	Outside buzzer	“ON” / “OFF”
Lights	High beam assist	“ON” / “OFF”
Guide me light	To car	10 seconds / 15 seconds / 20 seconds / 25 seconds
	To home	10 seconds / 15 seconds / 20 seconds / 25 seconds / 30 seconds
Antitheft		Mode A / Mode D
Oil change		“Reset” To reset the system, push and hold the indicator selector knob for a while.
Auto stop / start AC		Standard / Economy / Comfort For details, refer to “Air conditioning system settings by Idling stop system” in this section.

Item		Customization
TPMS	Tyre pressure	The display shows current tyre inflation pressure. For details, refer to “Tyre Pressure Monitoring System (TPMS)” (P.3-140).
	TPMS mode	Comfort mode / Load mode For details, refer to “Tyre Pressure Monitoring System (TPMS)” (P.3-140).
Distance units		“Km” / “Miles”
Fuel economy units		“km/L” / “L/100km” / “MPG(UK)”
Select language		You can change the language of the information display.
Fuel economy reset		After refuel / Reset with Trip A / Manual
Temperature units		“°C” or “°F”
Display item	Calendar	“Calendar ON” / “Calendar OFF”
	Calendar format	DD.MM.YYYY / YYYY.MM.DD / MM.DD.YYYY
	Fuel economy history	Time / Drive cycle
	Motion history	“Display ON” / “Display OFF”
	Auto stop info	“Display ON” / “Display OFF”
	Auto stop warning	“Display ON” / “Display OFF”
	Intersection guide (if equipped)	“Display ON” / “Display OFF”
Animation	Warning	“Display ON” / “Display OFF”
Startup sound		“ON” or “OFF”

Item	Customization
Notification sounds	Volume low / Volume mid / Volume high
Default (Initialization setting)	Yes or No

Adjusting the clock

Adjust the clock by selecting “Clock setting” in the “Setting mode”. Then, select “Adjust clock”.

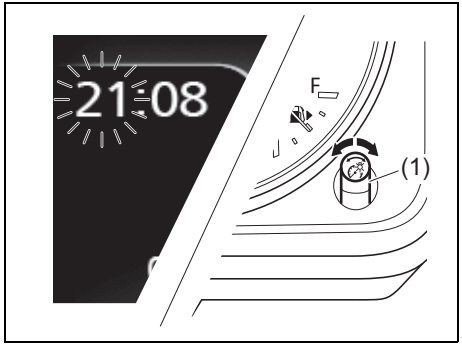

85U020230

1) To change the hour indication, turn the indicator selector knob (1) left or right repeatedly when the hour indication blinks. To change the hour indication quickly, turn and hold the indicator selector knob (1). To set the hour indication, push the indicator selector knob (1) and the minute indication blinks.
2) To change the minute indication, turn the indicator selector knob (1) left or right repeatedly when the minute indication blinks. To change the minute indication quickly, turn and hold the indicator selector knob (1). To set the minute indication, push the indicator selector knob (1).

Adjusting the date

Adjust the date by selecting “Clock setting” in the “Setting mode”. Then select “Adjust date”.

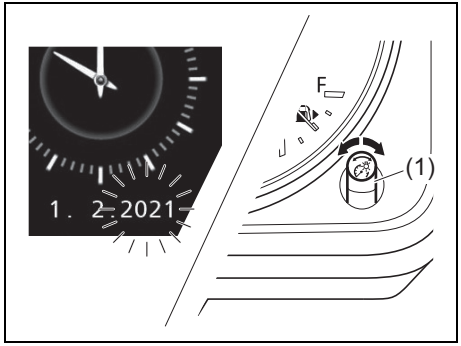

85U020240

1) To change the year indication, turn the indicator selector knob (1) left or right repeatedly when the day indication blinks. To change the day indication quickly, turn and hold the indicator selector knob (1). To set the day indication, push the indicator selector knob (1) and the day indication blinks.
2) To change the month indication, turn the indicator selector knob (1) left or right repeatedly when the month indication blinks. To change the month indication quickly, turn and hold the indicator selector knob (1). To set the month indication, push the indicator selector knob (1) and the day indication blinks.
3) To change the day indication, turn the indicator selector knob (1) left or right repeatedly when the day indication blinks. To change the day indication quickly, turn and hold the indicator selector knob (1). To set the day indication, push the indicator selector knob (1).

Air conditioning system settings by idling stop system

- When using the automatic heating and air conditioning system while the engine is stopped automatically by the ENG A-STOP system, you can select one of the following settings via the setting mode of the information display.
  - – Standard
  - – Economy
  - – Comfort
- When “Economy” is selected, engine auto stop condition is eased, compared with “Standard”. As engine auto stop condition will occur more frequently, the stop time will be longer, leading to reduction of fuel consumption.
- When “Comfort” is selected, engine auto stop condition becomes severe, compared with “Standard”. As engine auto stop condition will occur less frequently, the stop time will be shorter, leading to more comfortable cabin condition by air conditioner.

Warning and indicator messages

The display shows warning and indicator messages to let you know about certain vehicle problems.
In some cases, the internal buzzer may also sound at the same time to alert you.

If warning and indicator messages appear on the display, follow the messages.

Master warning indicator light



80P0382

When the display shows warning and indicator messages, the master warning indicator light may also blink.

NOTE:
- *When the problem that causes a message to appear is corrected, the message will disappear.*
- *If a message is displayed, and other problems requiring a message occur, the message for each of the problems will be alternately displayed about every 5 seconds.*
- *When you push and hold the indicator selector knob (3) for several seconds while a message is displayed, the message will disappear temporarily. If the problem that caused the message is not corrected, the message will appear again after several seconds.*

Warning and indicator messages

NOTE:
The displayed items vary depending on the vehicle models.

All model

Warning and indicator	Message	Master warning indicator light	Sound	Cause and remedy
 85U020180	–	Blinks (only while vehicle is in motion) 	Beeps at long intervals (from interior buzzer)	A door or tailgate is not properly closed. Stop the vehicle in a safe place and close the door or tailgate properly.*1
 69T040090	"RELEASE PARKING BRAKE"	Blinks 	Beeps at short intervals (from interior buzzer)	The parking brake has not released. Stop the vehicle in a safe place and release the parking brake.

*1 This message will disappear for a while even if the problem that caused the message to appear is not corrected.

Warning and indicator	Message	Master warning indicator light	Sound	Cause and remedy
 69T040100	“LIGHTS ON”	Blinks 	Continuous beep (from interior buzzer)	The headlights and/or the position lights are left on. Turn them off.
 69T040110	“LOW FUEL”	Off	Chime (from interior buzzer)	Fuel level is low. Refill it as soon as possible.*1

*1 This message will disappear for a while even if the problem that caused the message to appear is not corrected.

Warning and indicator	Message	Master warning indicator light	Sound	Cause and remedy
 69T040130	“CHANGE ENGINE OIL”	Off	Off	Change the engine oil and oil filter as soon as possible. The oil life monitoring system must be reset after changing the engine oil and oil filter. Refer to “Oil change request light (if equipped)” (P.2-75).
 69T040140	“IGNITION SWITCH POSITION ACC”	Off	Off	This message is displayed when ACC position is selected as the ignition mode.*1
 69T040150	“PUSH START SWITCH”	Off	Off	The brake pedal (for Automatic transmission vehicle) or the clutch pedal (for manual transmission vehicle) is depressed. Press the engine switch to start the engine.

*1 This message will disappear for a while even if the problem that caused the message to appear is not corrected.

Warning and indicator	Message	Master warning indicator light	Sound	Cause and remedy
 69T040160	“SERVICE STEERING LOCK SYSTEM”	Blinks 	Chime (from interior buzzer)	There is a problem with the steering lock system. Have your vehicle inspected by an authorized SUZUKI dealer or a qualified workshop.
 69T040170	“SERVICE START SYSTEM”	Blinks 	Chime (from interior buzzer)	There is a problem with the immobilizer/keyless push start system. Also, the vehicle battery voltage may be decreased. When the message is displayed even if you start the engine with normal voltage of the vehicle battery, have your vehicle inspected by an authorized SUZUKI dealer or a qualified workshop.

Warning and indicator	Message	Master warning indicator light	Sound	Cause and remedy
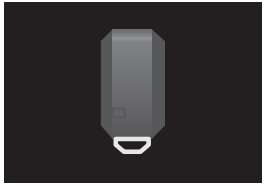 69T040180	"KEY FOB NOT DETECTED"	Blinks 	Series of beeps under certain conditions (from exterior and/or interior buzzers)	The remote controller may be outside the vehicle or its battery may be discharged. Bring the remote controller in the vehicle or touch the engine push start switch with the remote controller. If the message still appears, replace the remote controller battery.
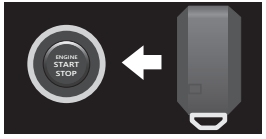 69T040190	"PLACE KEY FOB ON START SWITCH"			

Warning and indicator	Message	Master warning indicator light	Sound	Cause and remedy
 69T040200	"IGNITION SWITCH POSITION ON"	Off	Off	This message is displayed when ON position is selected as the ignition mode.*1
 69T040160	"PRESS START SW WHILE TURNING STRG WHL"	Blinks 	Chime (from interior buzzer)	The steering lock is not disengaged. While lightly turning the steering wheel in both directions, press the engine switch again.

*1 This message will disappear for a while even if the problem that caused the message to appear is not corrected.

Warning and indicator	Message	Master warning indicator light	Sound	Cause and remedy
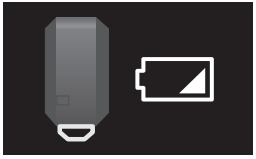 69T040210	“KEY FOB LOW BATTERY”	Off	Chime (from interior buzzer)	The remote controller battery is about to become flat. Replace the battery.*1

*1 This message will disappear for a while even if the problem that caused the message to appear is not corrected.

Warning and indicator	Message	Master warning indicator light	Sound	Cause and remedy
Automatic Transmission 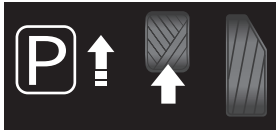 69T040230	“PRESS BRAKE SHIFT TO P TO START”	Off	Short beep (from interior buzzer) / Beeps at short intervals (from interior buzzer) / Continuous beep (from interior buzzer)	• The engine switch is pressed with the gearshift lever in a position other than “P” or “N” or without depressing the brake pedal. Try again as instructed by the message. • Even though the gearshift lever is shifted, the gear is not shifted to the desired selector position. Shift the gearshift lever into “P” with depressing the brake pedal, and then operate the gearshift lever again.
Automatic Transmission  69T040240	“GEARSHIFT NOT IN PARK”	Off	Chime (from interior buzzer)	The engine switch is pressed with the gearshift lever in a position other than “P”. Try again as instructed by the message.

Warning and indicator	Message	Master warning indicator light	Sound	Cause and remedy
 69T040280	"VEHICLE SWAYING DETECTED" *2	Off	Short beep (from interior buzzer)	The vehicle swaying warning is activated. Refer to "Vehicle swaying warning" in "OPERATING YOUR VEHICLE" section for details.
 62R0316	"DUAL SENSOR BRAKE SUPPORT SYSTEM OFF"	Blinks 	Short beep (from interior buzzer)	The Dual Sensor Brake Support II (DSBS II) is turned off.
 62R0316	"ESP SYSTEM TURNED OFF DSBS SYSTEM UNAVAILABLE"	Blinks 	Chime (from interior buzzer)	The Dual Sensor Brake Support II (DSBS II) is turned off.

*2 The warning message will disappear after a certain period of time, even if the condition is not resolved.

Warning and indicator	Message	Master warning indicator light	Sound	Cause and remedy
 69TJ040610 Hands are illuminated in white	“KEEP CONTROL OF STEERING WHEEL”	Blinks 	Beeps at short intervals (from interior buzzer)	The system is detecting that the steering is not held or no steering operation. Hold the steering wheel firmly.

Warning and indicator	Message	Master warning indicator light	Sound	Cause and remedy
 69T040280	“LDP SYSTEM UNAVAILABLE AT CURRENT SPEED” *2	Off	Off	The lane departure prevention system does not operate because the vehicle speed exceeds the maximum vehicle speed which the lane departure prevention system operates.
 69T040300	“ACCELERATOR PEDAL IS PRESSED PRESS BRAKE”	Blinks 	Beeps at short intervals (from interior buzzer)	After the automatic brake system is activated, the system is holding the vehicle in a stopped state. (when the accelerator pedal is depressed)
	“ACCELERATOR PEDAL IS PRESSED”			The automatic brake system is activated. (when the accelerator pedal is depressed)

*2 The warning message will disappear after a certain period of time, even if the condition is not resolved.

Warning and indicator	Message	Master warning indicator light	Sound	Cause and remedy
Not displayed	“DSBS II SYSTEM STOPPED”	Off	Short beep (from interior buzzer)	The dual sensor is temporarily stopped. Refer to “Temporary stop of the dual sensor” in “OPERATING YOUR VEHICLE” section for details.
Not displayed	“F CAMERA STOPPED (TEMP)”	Blinks 		The front camera (DSBS II) functions is temporarily stopped, because the front camera (DSBS II) itself is in low and high temperature. Refer to “Temporary stop of the dual sensor” in “OPERATING YOUR VEHICLE” section for details.
Not displayed	“F CAMERA STOPPED (LOW VIS)”	Off		The front camera (DSBS II) functions is temporarily stopped, because visibility from the front camera (DSBS II) is poor. Refer to “Temporary stop of the dual sensor” in “OPERATING YOUR VEHICLE” section for details.

Warning and indicator	Message	Master warning indicator light	Sound	Cause and remedy
Not displayed	“F RADAR STOPPED (TEMP)”	Blinks 	Chime (from interior buzzer)	The front radar (DSBS II) functions is temporarily stopped, because the front radar (DSBS II) itself is in low and high temperature. Refer to “Temporary stop of the dual sensor” in “OPERATING YOUR VEHICLE” section for details.
Not displayed	“CLEAN EXTERNAL RADAR”	Off	Off	The front radar (DSBS II) functions is temporarily stopped, because the surrounding areas of radar is dirty. Refer to “Temporary stop of the dual sensor” in “OPERATING YOUR VEHICLE” section for details.
Not displayed	“F RADAR STOPPED (CALIB)”	Off	Off	The front radar (DSBS II) functions is temporarily stopped, because the recognition angle of radar is bad. Refer to “Temporary stop of the dual sensor” in “OPERATING YOUR VEHICLE” section for details.
Not displayed	“DSBS II SYSTEM DISABLED”	Blinks 	Chime (from interior buzzer)	There may be a problem with the dual sensor. If this message is still displayed even when you restart the engine, consult an authorized SUZUKI dealer or a qualified workshop.

Warning and indicator	Message	Master warning indicator light	Sound	Cause and remedy
 69T040300	"DUAL SENSOR BRAKE SUPPORT"	Blinks 	Beeps at short intervals (from interior buzzer)	The frontal collision warning is activated. Refer to "Frontal collision warning" in "OPERATING YOUR VEHICLE" section for details.
				The brake assist system is activated. Refer to "Brake assist system" in "OPERATING YOUR VEHICLE" section for details.
				The automatic brake system is activated. Refer to "Automatic brake system" in "OPERATING YOUR VEHICLE" section for details.
 69T040310	"CLEAN PARKING SENSORS"	Off	Off	The parking sensor is dirty. Refer to "When the ultrasonic sensor detects any foreign object" in "OPERATING YOUR VEHICLE" section for details.

Warning and indicator	Message	Master warning indicator light	Sound	Cause and remedy
 69T040310	“SERVICE PARKING SENSORS”	Blinks 	Off	There may be a problem with the ultrasonic sensors. If this message is still displayed even when you start the engine, consult an authorized SUZUKI dealer or a qualified workshop.

Warning and indicator	Message	Master warning indicator light	Sound	Cause and remedy
 85U030190	–	Off	Short beeps at long intervals from interior buzzer or Short beeps at short intervals from interior buzzer	The ultrasonic sensors detect objects. Refer to “Parking sensors” in “OPERATING YOUR VEHICLE” section for details.
 85U030200	–	Off	Short beeps at very short intervals from interior buzzer	
 85U030210	–	Off	Continuous beep from interior buzzer	

Vehicle with ESP® system

Warning and indicator	Message	Master warning indicator light	Sound	Cause and remedy
 85U020350	“SERVICE ESP SYSTEM”	Blinks 	Chime (from interior buzzer)	There may be a problem with ESP® system. Have your vehicle inspected by an authorized SUZUKI dealer or a qualified workshop.
 85U020350	“HILL HOLD DISABLE”	Blinks 	Chime (from interior buzzer)	There may be a problem with hill hold control system. Have your vehicle inspected by an authorized SUZUKI dealer or a qualified workshop.

Vehicle with Gasoline Particulate Filter (GPF) (if equipped)

Warning and indicator	Message	Master warning indicator light	Sound	Cause and remedy
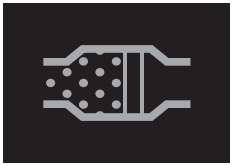 69T040270	"WARNING GPF SYSTEM"	Blinks 	Chime (from interior buzzer)	There may be a problem with the gasoline particulate filter. Have your vehicle inspected by an authorized SUZUKI dealer or a qualified workshop.
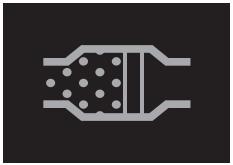 69T040270	"DRIVE TO REGENERATE GPF"	Blinks 	Chime (from interior buzzer)	You should regenerate the GPF. Refer to "Gasoline Particulate Filter (GPF) (if equipped)" in "OPERATING YOUR VEHICLE" section for details.

NOTE:

- *If your vehicle is equipped with the Idling stop system, the information display also indicates warning and indicator messages related to the system. For information on these messages, refer to "Idling stop system" in "OPERATING YOUR VEHICLE" section.*
- *If your vehicle is equipped with the Dual Sensor Brake Support II (DSBS II), the information display also indicates warning and indicator messages related to the system. For information on these messages, refer to ""Dual Sensor Brake Support II (DSBS II)" in "OPERATING YOUR VEHICLE" section.*
- *If your vehicle is equipped with the adaptive cruise control, the information display also indicates warning and indicator messages related to the system. For information on these messages, refer to "Adaptive cruise control (if equipped)" or "Adaptive cruise control (with following function for all speeds)" in "OPERATING YOUR VEHICLE" section.*
- *If your vehicle is equipped with the lane departure prevention, the information display also indicates warning and indicator messages related to the system. For information on these messages, refer to "Lane departure prevention" in "OPERATING YOUR VEHICLE" section.*
- *If your vehicle is equipped with a parking sensor system, the information display also indicates warning and indicator messages related to the system. For information on these messages, refer to "Parking sensors" in "OPERATING YOUR VEHICLE" section.*

Brake system warning light

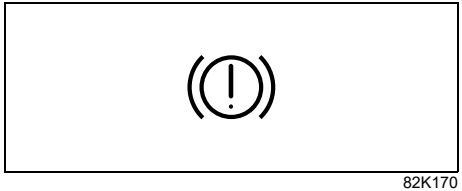

82K170

Three different types of operations exist depending on the vehicle's specification.

- The light comes on briefly when the ignition switch is turned "ON" or the engine switch is pressed to change the ignition mode to ON.
- The light comes on when the parking brake is engaged with the ignition switch "ON" or press the engine switch to change the ignition mode to ON.
- The light comes on under either or both of above two conditions.

The light also comes on when the fluid in the brake fluid reservoir falls below the specified level.

The light should go out after starting the engine and fully releasing the parking brake, if the fluid level in the brake fluid reservoir is adequate.

The light also comes on together with the ABS warning light when the rear brake force control function (proportioning valve function) of the ABS system fails.

If the brake system warning light comes on while you are driving the vehicle, it may mean that there is something wrong with the vehicle's brake system.
If this happens:

1) Pull off the road and stop carefully.

⚠ WARNING

Remember that stopping distance may be longer, you may have to push harder on the pedal, and the pedal may go down farther than normal.

2) Test the brakes by carefully starting and stopping the vehicle on the shoulder of the road.
3) If you determine that it is safe, drive the vehicle cautiously at low speed to the nearest authorized SUZUKI dealer or a qualified workshop for repairs or tow the vehicle to the nearest authorized SUZUKI dealer or a qualified workshop for repairs.

⚠ WARNING

If any of the following conditions occur, you should immediately ask an authorized SUZUKI dealer or a qualified workshop to inspect the brake system.

- **If the brake system warning light does not go out after the engine has been started and the parking brake has been fully released.**
- **If the brake system warning light does not come on when the ignition switch is turned "ON" or press the engine switch to change the ignition mode to ON.**
- **If the brake system warning light comes on at any time during vehicle operation.**

NOTE:
Because the brake system is self-adjusting, the fluid level will drop as the brake pads become worn. Replenishing the brake fluid reservoir is considered normal periodic maintenance.

NOTE:
Parking brake reminder buzzer
A buzzer sounds intermittently to remind you to release the parking brake if you start the vehicle without releasing the parking brake. Check that the parking brake is fully released and the brake system warning light turns off.

Anti-lock brake system (ABS) warning light

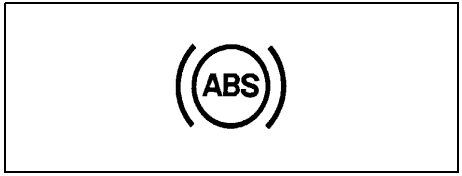

65D529

When the ignition switch is turned “ON” or the engine switch is pressed to change the ignition mode to ON, this light comes on briefly so you can check that the light is working.
If the light stays on or comes on when driving, there may be something wrong with the ABS.

If this happens:
1) Pull off the road and stop carefully.
2) Turn the ignition switch to “LOCK” or press the engine switch to change the ignition mode to LOCK (OFF) and then start the engine again.

If the warning light comes on briefly and then turns off, the system is normal. If the warning light still stays on, something is wrong with the system.

If the light and the brake system warning light stay on or come on simultaneously when driving, your ABS system is equipped with the rear brake force control function (proportioning valve function) and there may be something wrong with both the rear brake force control function and the anti-lock function of the ABS system.

If one of the above occurs, have the system inspected by an authorized SUZUKI dealer or a qualified workshop.
If the ABS becomes inoperative, the brake system will function as an ordinary brake system that does not have this ABS system.

For details of ABS system, refer to “Anti-lock brake system (ABS)” in “OPERATING YOUR VEHICLE” section.

ESP® warning light



52KM133

ESP® is a registered trademark of Mercedes-Benz Group AG.

This light blinks 5 times per second when one of the following systems is activated.
- Stability control system
- Traction control system
- Hill descent control system

If this light blinks, drive carefully.

When the ignition switch is turned “ON” or the engine switch is pressed to change the ignition mode to ON, the light comes on briefly so you can check that the light is working. If the light stays on or comes on when driving, there may be something wrong with the ESP® systems (other than ABS). You should have the system inspected by an authorized SUZUKI dealer or a qualified workshop.

For details of the ESP® systems, refer to “Electronic stability program (ESP®)” in “OPERATING YOUR VEHICLE” section.

⚠ WARNING

The ESP® systems cannot prevent accidents. Always drive carefully.

ESP® OFF indicator light



57L30045

When the ignition switch is turned “ON” or the engine switch is pressed to change the ignition mode to ON, this light comes on briefly so you can check that the light is working.

When the ESP® OFF switch is pushed to turn off the ESP® systems (other than ABS), the ESP® OFF indicator light comes on and stays on.

For details of the ESP® systems, refer to “Electronic stability program (ESP®)” in “OPERATING YOUR VEHICLE” section.

NOTE:
- *If the vehicle speed is greater than approximately 30 km/h (19 mph), the ESP® systems (other than ABS) will be activated automatically and the light will go out.*
- *When the transfer lever is in “4L” (4-wheel drive low range) position, the ESP® system (other than ABS) will be canceled automatically. The light will come on and stay on.*

Hill descent control indicator light

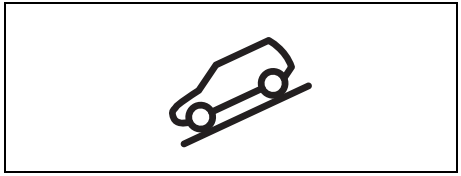

79K050

When the ignition switch is turned “ON” or the engine switch is pressed to change the ignition mode to ON, this light comes on briefly so you can check that the light is working. When you push the hill descent control switch and the hill descent control operating conditions are fulfilled, the hill descent control indicator comes on. If the hill descent control indicator blinks, the hill descent control will not be activated.

For details of the hill descent control system, refer to “Hill descent control system” in the “OPERATING YOUR VEHICLE” section.

Engine oil pressure warning light

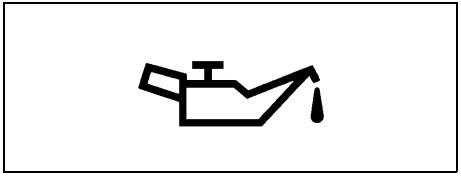

50G051

When the ignition switch is turned “ON” or the engine switch is pressed to change the ignition mode to ON, this light comes on. When the engine is started, the light goes out. The light will come on and remain on if there is insufficient oil pressure. If the light comes on when driving, pull off the road as soon as you can and stop the engine.
Check the oil level and add oil if necessary. If there is enough oil, the lubrication system should be inspected by an authorized SUZUKI dealer or a qualified workshop before you drive the vehicle again.

NOTICE

- **If you operate the engine with this light on, severe engine damage can result.**
- **Do not rely on the oil pressure light to indicate the need to add oil. Periodically check the engine oil level.**

Charge warning light

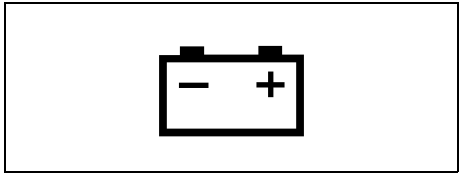

50G052

When the ignition switch is turned “ON” or the engine switch is pressed to change the ignition mode to ON, this light comes on. When the engine is started, the light goes out. The light will come on and remain on if there is something wrong with the battery charging system. If the light comes on when the engine is running, the charging system should be inspected immediately by an authorized SUZUKI dealer or a qualified workshop.

Driver’s seat belt reminder light / Front passenger’s seat belt reminder light



60G049

When the driver or front passenger does not buckle his or her seat belt, this light will come on and/or blink.
For details of the seat belt reminder, refer to “Seat belts and child restraint systems” in the “FOR SAFE DRIVING” section.

Rear passenger's seat belt reminder light



85U020250

When the rear passenger does not buckle his or her seat belt, this light will come on and/or blink. For details of the seat belt reminder, refer to “Seat belts and child restraint systems” in the “FOR SAFE DRIVING” section.

Airbag warning light



63J030

When the ignition switch is turned “ON” or the engine switch is pressed to change the ignition mode to ON, this light comes on for several seconds so you can check that the light is working.

The light will come on and stay on if there is a problem in the airbag system or the seat belt pretensioner system.

⚠ WARNING

If AIRBAG light does not blink or come on briefly when the ignition switch is turned “ON” or the engine switch is pressed to change the ignition mode to ON, stays on for more than 10 seconds, or comes on while driving, the airbag system or the seat belt pretensioner system may not work properly, which could result in serious injury in the event of a collision. Have both systems inspected by an authorized SUZUKI dealer or a qualified workshop.

Malfunction indicator light

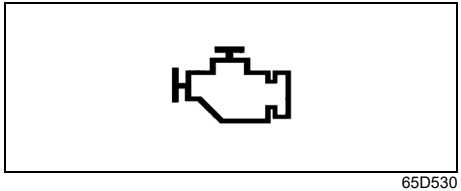

65D530

Your vehicle has a computer-controlled emission control system. A malfunction indicator light is provided on the instrument cluster to indicate when it is necessary to have the emission control system serviced. When the ignition switch is turned “ON” or the engine switch is pressed to change the ignition mode to ON, this light comes on. When the engine is started, the light goes out.

If the malfunction indicator light comes on or blinks when the engine is running, there is a damage in the emission control system.
Bring the vehicle to an authorized SUZUKI dealer or a qualified workshop to have the damage fixed.

Also, if this light comes on when the engine is running, there is a problem with the automatic transmission system. Ask an authorized SUZUKI dealer or a qualified workshop to have the system inspected.

⚠ CAUTION

If this light blinks, stop your vehicle immediately in a safe place to avoid catalyst's melting problem since there may be a misfire in the engine.
- **Do not drive or stop over such as withered grasses.**
- **Drive slowly if required to move the vehicle.**

NOTICE

Continuing to drive the vehicle when the malfunction indicator light is on or blinking can cause permanent damage to the vehicle’s emission control system, and can affect fuel economy and driveability.

Electric power steering warning light



80J408

When the ignition switch is turned “ON” or the engine switch is pressed to change the ignition mode to ON, this light comes on. When the engine is started, the light goes out.

If this light comes on while driving, the power steering system may not work properly. Have the system inspected by an authorized SUZUKI dealer or a qualified workshop.

NOTE:

- *The following steering wheel operations may gradually take more effort while parking or driving at a very low speed. This is not a malfunction of the steering system, but the power steering control system limits the power assist in order to prevent it from overheating.*
  - *The steering wheel is operated very often.*
  - *The steering wheel is kept in a fully turned position for a long while.*

  When the power steering control system cools down, the power steering system will return to its original condition.
  However, repeating these operations could cause damage to the power steering system.
- *If the power steering system does not work properly, it will require greater effort to steer, but you still will be able to steer.*
- *If the steering is operated, you may hear noise caused by electric power steering operation. This is normal and indicates that the power steering system works properly.*

Transmission warning light (if equipped)

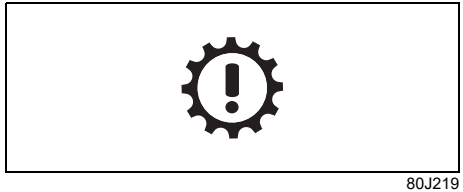

80J219

When the ignition switch is turned “ON” or the engine switch is pressed to change the ignition mode to ON, this light comes on for several seconds so you can check that the light is working.
If this light comes on when the engine is running, there is a problem with the automatic transmission system. Ask an authorized SUZUKI dealer or a qualified workshop to have the system inspected.

Immobilizer / Keyless push start system warning light (if equipped)

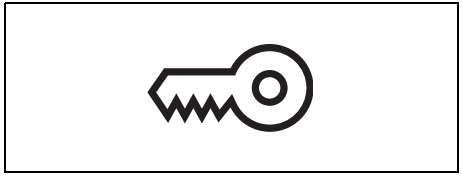

80JM122

When the ignition switch is turned “ON” or the engine switch is pressed to change the ignition mode to ON, this light comes on briefly so you can check that the light is working. If this light blinks or stays on, there is a problem with the system. If this light still blinks or stays on even if you start the engine with normal voltage of the vehicle battery, ask an authorized SUZUKI dealer or a qualified workshop to have the system inspected.

Open door warning light

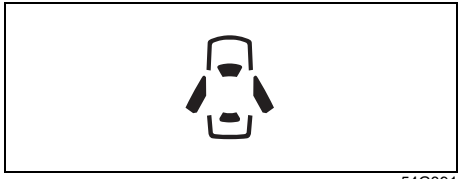

54G391

This light remains on until all doors (including the tailgate) are completely closed.

If any door (including the tailgate) is open when the vehicle is moving, a ding sounds to remind you to close all doors completely.

Low fuel warning light



54G343

If this light comes on, refuel the fuel tank as soon as possible.When this light comes on, a ding sounds once to remind you to refuel. If you do not refuel, a ding sounds every time when the ignition switch is turned “ON” or press the engine switch to change the ignition mode to ON.

NOTE:
The activation point of this light varies depending on road conditions (for example, slope or curve) and driving conditions because of fuel movement in the tank.

Engine coolant temperature light

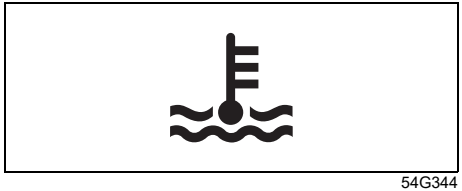

54G344

When the ignition switch is turned “ON” or press the engine switch to change the ignition mode to ON, this light comes on briefly so you can check that the light is working.

This indicator has the following two functions.

Low engine coolant temperature light (blue color)

This light stays on while the engine is still cold and goes off when the engine has warmed up.

If this light blinks, there is a problem with the system. Have your vehicle inspected by an authorized SUZUKI dealer or a qualified workshop.

High engine coolant temperature warning light (red color)

If this light blinks while driving, it means the engine is running hot. Avoid driving conditions that may lead to actual overheating. If the light stays on without blinking, then the engine is overheating. Follow the instructions in “Engine trouble: Overheating” of “EMERGENCY SERVICE” section.

NOTICE

Continuing to drive the vehicle when engine overheating is indicated can result in severe engine damage.

Turn signal indicators

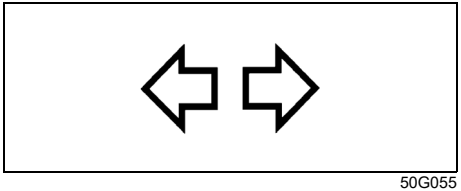

50G055

When you turn on the left or right turn signals, the corresponding green arrow on the instrument cluster will flash along with the respective turn signal lights. When you turn on the hazard warning switch, both arrows will flash along with all of the turn signal lights.

NOTE:
If any abnormality of the turn signals is observed, such as fast blinking, there may be a malfunction in the turn signal system. Ask an authorized SUZUKI dealer or a qualified workshop to inspect the system.

Main beam (high beam) indicator light

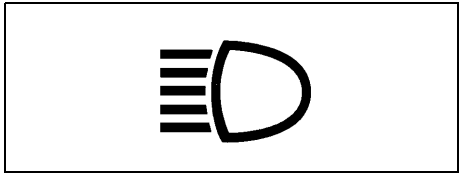

50G056

This indicator comes on when headlight main beams (high beams) are turned on.

Illumination indicator light

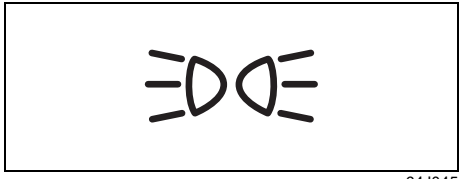

64J045

This indicator light comes on while the position lights, tail light and/or the headlights are on.

Front fog light indicator light

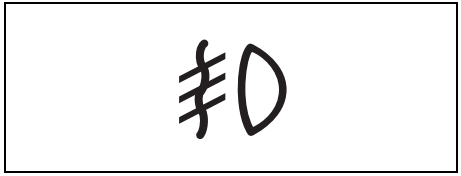

68PM00268

The front fog light indicator light comes on when the front fog light operates.

Rear fog light indicator light (if equipped)

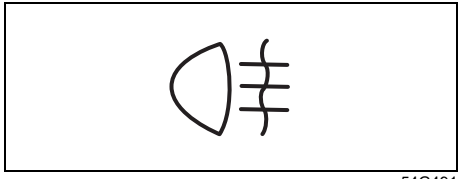

54G491

The rear fog light indicator light comes on when the rear fog light operates.

Oil change reminder light (if equipped)



79JM007

Your vehicle has the oil life monitoring system and related oil change reminder light that alerts you to change the engine oil and oil filter.
When this light comes on, change engine oil and oil filter immediately.
For details on how to change the engine oil and oil filter, refer to “Changing engine oil and filter” in “INSPECTION AND MAINTENANCE” section.

This light comes on for several seconds when the ignition switch is turned “ON” or the engine switch is pressed to change the ignition mode to ON, so you can check that light is working.

If either of odometer reading or time is reached to the value which is set by the system, this light comes on when the ignition switch is in “ON” position or the engine switch is in “ON” position. In addition, the message is shown on the information display to tell you it is necessary to change the engine oil and oil filter. When the

engine oil and oil filter are changed and the oil life monitoring system is reset, this light will go out. For details of the maintenance schedule, refer to “Periodic maintenance schedule” in “INSPECTION AND MAINTENANCE” section.

Whenever the engine oil and oil filter are changed, the light must be reset to monitor the next oil change timing properly. The light will go out after the reset. For the resetting procedure, refer to “Information display” in this section.

NOTICE
Severe engine damage will result, if you keep operating the engine after this light comes on. **Change the engine oil and oil filter immediately when the light blinks.**

NOTE:

- *This light is used to facilitate the oil and oil filter change according to the maintenance schedule.*
- *Even though the oil is replaced before this light comes on, reset of the oil life monitoring system is necessary. Consult an authorized SUZUKI dealer or a qualified workshop about the reset method. If you reset it by yourself, refer to “Setting mode” in this section.*
- *Consult an authorized SUZUKI dealer or a qualified workshop for changing the setting of oil life monitoring system in one of the following cases;*
  - *If you replace ACEA Standards or SUZUKI genuine engine oil by the engine oil other than ACEA Standards or SUZUKI genuine engine oil, or vice versa*
  - *By the change of your driving condition, if you need to apply the schedule of “Maintenance recommended under severe driving conditions” instead of “Periodic maintenance schedule” in “INSPECTION AND MAINTENANCE” section, or vice versa*

Master warning indicator light



68PM00278

When the ignition switch is turned “ON” or or the engine switch is pressed to change the ignition mode to ON, this light comes on briefly so you can check that the light is working.

When the information display shows warning and indicator messages, this indicator light may also blink.

For details, refer to “Information display” in this section.

4WD indicator light

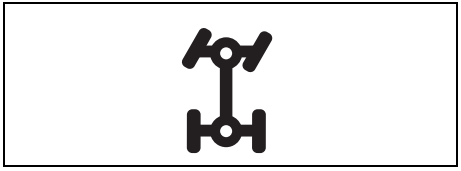

78RB02078

This indicator light comes on when the transfer gear and the air locking hubs are switched to 4-wheel drive condition (“4H” or “4L”).

When the ignition switch is turned “ON” or the engine switch is pressed to change the ignition mode to ON, this 4WD indicator light will come on for a while and then this light will turned on or off according to the drive condition.

If 4WD indicator light continues to blink, there may be a malfunction of the system. If so, have the system inspected by an authorized SUZUKI dealer or a qualified workshop.

When you shift the transfer lever from “2H” position to “4H” position at a speed of 100 km/h (60 mph) or more, this indicator light blinks.

When you shift transfer lever again while changing the drive condition, this indicator blinks.

NOTE:
When the drive condition is 4-wheel drive condition and the engine is not running with the ignition switch turned "ON" or the ignition mode to ON, this 4WD indicator light will come on for a while and then blink. In this situation, when you start the engine and this indicator light comes on, the system does not indicate a malfunction.

Speed alert indicator light (if equipped)



78RB02104

This light blinks when the vehicle speed exceeds about 120km/h. If this light blinks, check the vehicle speed and drive carefully.

Overdrive OFF switch light (if equipped)

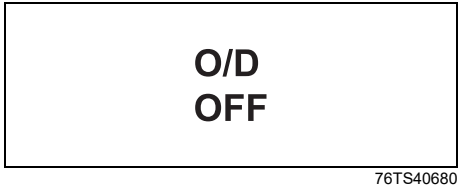

76TS40680

The transmission is a 4-speed (3-speed plus overdrive) automatic transmission. By operating the overdrive off switch, the transmission can be converted to a 3-speed automatic transmission that will not move to the overdrive position. To convert the transmission to the 3-speed mode, push in the overdrive off switch and release it.

To return the transmission to the 4-speed mode, push in the overdrive off switch again.

When the ignition switch is turned to "ACC" position or the engine switch is pressed to change the ignition mode to ACC, the transmission in the 3-speed mode is converted to the 4-speed mode automatically.
The 3-speed mode is suitable for the following driving conditions:

- Driving on hilly, winding roads
  – You can drive more smoothly with less frequent gear changing
- Going down a steep hill
  – Some engine braking is provided

For details, refer to "Overdrive off switch" in "OPERATING YOUR VEHICLE" section.

Theft deterrent light (if equipped) / Theft deterrent alarm system (if equipped)

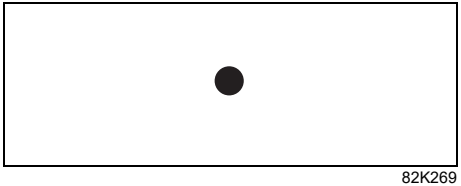

82K269

For details about the theft deterrent light system (if equipped) or the theft deterrent alarm system (if equipped), refer to "Theft deterrent light (if equipped)" or "Theft deterrent alarm system" in this section.

Dual Sensor Brake Support II (DSBS II) OFF indicator light (if equipped)

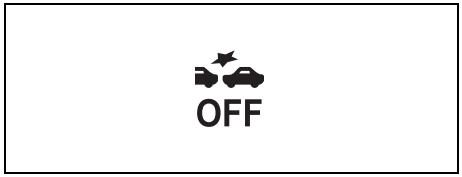

54P000254

When the ignition switch is turned “ON” or the engine switch is pressed to change the ignition mode to ON, this light comes on briefly so you can check that the light is working.

- In the following situations, this light will come on and the Dual Sensor Brake Support II (DSBS II) system will stop functioning.
  – When the Dual Sensor Brake Support II (DSBS II) OFF switch is pushed and held to turn off the Dual Sensor Brake Support II (DSBS II) system.
  – When the ESP® OFF switch is pushed to turn off the ESP® systems (other than ABS), the ESP® OFF indicator light will also come on.
  – When the transfer lever is shifted to “4L” position, the Dual Sensor Brake Support II (DSBS II) OFF indicator light will come on. For operation of transfer lever, refer to "Transfer lever operation" in "OPERATING YOUR VEHICLE” section.
- If this light comes on, there is a problem with the Dual Sensor Brake Support II (DSBS II). Bring the vehicle to an authorized SUZUKI dealer or a qualified workshop to have the problem corrected.

For details, refer to “Dual Sensor Brake Support II (DSBS II)” in “OPERATING YOUR VEHICLE” section.

Lane departure prevention indicator light (if equipped)

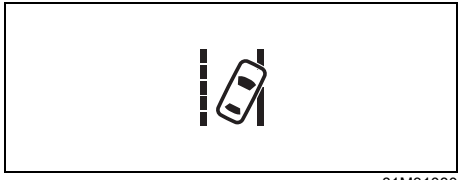

81M31080

The light will illuminate or blink when the lane departure prevention or lane departure warning is operating. The light color, illumination and blinking state will change depending on the operating status of the system.

- When the lane departure prevention is active, it lights up in green.
- When the lane departure warning is active, it blinks in yellow.
- If there is a malfunction in the system as described below, it lights up in yellow. Bring the vehicle to an authorized SUZUKI dealer or a qualified workshop to have the problem corrected.
  – Lane departure warning (P.3-70)
  – Lane departure prevention (P.3-71)
  – Vehicle swaying warning (P.3-71)

If the system is functioning normally, the light will illuminate in yellow for a few seconds when the ignition switch is turned “ON” or the engine switch is pressed to change the ignition mode to ON, and then light off.

Lane departure prevention OFF indicator light (if equipped)

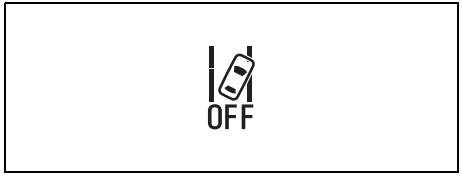

62R0317

When the lane departure prevention OFF switch is pushed and held to turn off the lane departure prevention, this light comes on.

For details, refer to “Displays and system operation” of “Lane departure prevention system (if equipped)”.

Steering assist indicator light (if equipped)



69T010150

The light will illuminate or blink when the lane departure prevention or lane keeping assist is active. The light color, illumination and blinking state will change depending on the operating status of the system.

- When the lane departure prevention is active, it illuminates in green.
  – Lane departure prevention (P.3-71)

If the system is functioning normally, the light will illuminate in white for a few seconds when the ignition switch is turned “ON” or the engine switch is pressed to change the ignition mode to ON, and then light off.

High beam assist warning light (yellow) (if equipped)

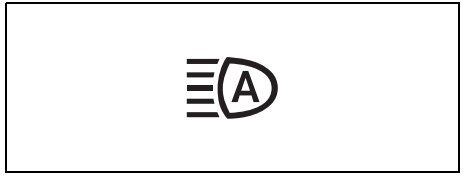

52RM20690

When the ignition switch is turned “ON” or the engine switch is pressed to change the ignition mode to ON, this light comes on by yellow briefly so you can check that the light is working.

When the high beam assist has failure, this light will come on and the Dual Sensor Brake Support II (DSBS II) will stop functioning when the ignition mode is ON. Ask an authorized SUZUKI dealer or a qualified workshop to have the dual sensor inspected.

NOTE:
If the function of the dual sensor stops temporarily, high beam assist also stops temporarily.

For details, refer to “Dual Sensor Brake Support II (DSBS II)” in “OPERATING YOUR VEHICLE” section.

High beam assist indicator light (green) (if equipped)

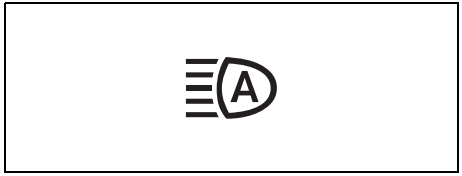

52RM20690

When the high beam assist is working, this light comes on by green.

For details, refer to “High beam assist” in “OPERATING YOUR VEHICLE” section.

Adaptive cruise control indicator light

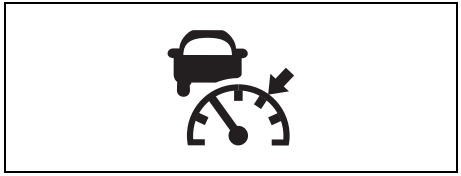

69TJ010190

The indicator color and coming on status change depending on the operating status of systems.

- When the adaptive cruise control is standby condition, this light comes on by white.
- When the adaptive cruise control is activate, this light comes on by green.
- When the adaptive cruise control malfunctions, this light comes on by yellow. Bring the vehicle to an authorized SUZUKI dealer or a qualified workshop to have the problem corrected.

Parking sensor indicator light



59S010120

When the ignition switch is turned “ON” or the engine switch is pressed to change the ignition mode to ON, this light comes on briefly so you can check that the light is working.

When the parking sensors are activated and then detected obstacles, this light blinks.

If this light comes on, there is a problem with the parking sensors. Bring the vehicle to an authorized SUZUKI dealer or a qualified workshop to have the problem corrected.

For details, refer to “Parking sensors” in “OPERATIONG YOUR VEHICLE” section.

Idling stop system indicator light (if equipped)

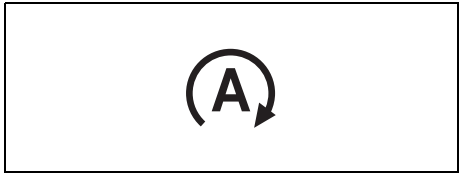

72M00032

When the engine switch is pressed to change the ignition mode to ON, this light comes on briefly to let you know the light is working.

When the engine stops automatically, this light comes on.

For details, refer to “Idling stop system (if equipped)” in the “OPERATING YOUR VEHICLE” section.

Idling stop system OFF indicator light (if equipped)

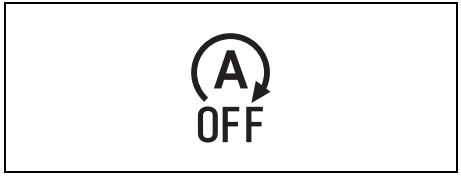

62R0352

When the engine switch is pressed to change the ignition mode to ON, this light comes on briefly if the system works properly.

When you push the Idling Stop System OFF switch, this light comes on.

If this light blinks when driving, there may be something wrong with the idling stop system. You should have the system inspected by an authorized SUZUKI dealer or a qualified workshop.

For details, refer to “Idling stop System (if equipped)” in the “OPERATING YOUR VEHICLE” section.

Gasoline particulate filter (GPF) warning light (if equipped)

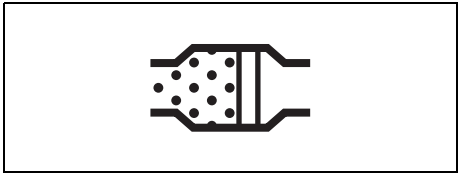

64J244

For details about the gasoline particulate filter, refer to “Gasoline Particulate Filter (GPF) (if equipped)” in the “OPERATING YOUR VEHICLE” section.

"R" (reverse gear) indicator light (if equipped)



69TJ040750

When the gearshift lever is in "R" (Reverse), this light comes on.

If the light does not come on when the gearshift lever is in "R" (Reverse), bring the vehicle to an authorized SUZUKI dealer or a qualified workshop to have the problem corrected.

Lighting control lever

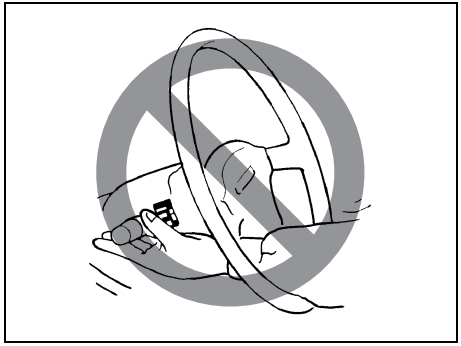

57L21128

⚠ WARNING

To avoid possible injury, do not operate controls by reaching through the steering wheel.

NOTE:
For operating the lighting control lever of Hong Kong, Macao and Singapore models, refer to "For Hong Kong, Macao and Singapore" in the "SUPPLEMENT" section.

Lightning operation

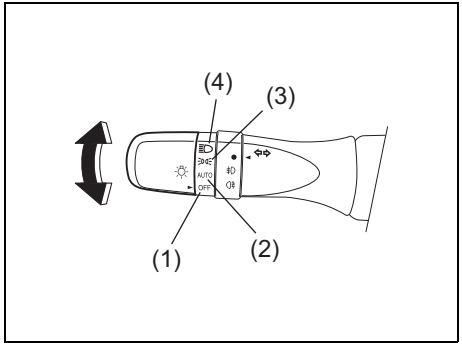

68PM00228

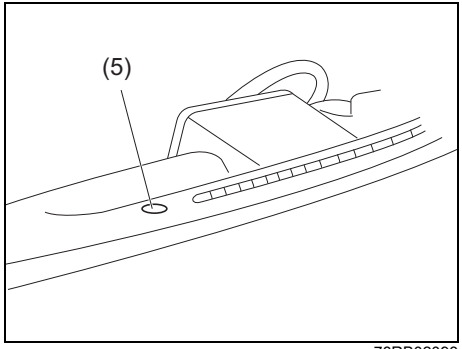

78RB02093

Your vehicle's lighting system is controlled by two main systems: the lighting switch and the auto-on headlight system (if equipped) (when the lighting switch is in "AUTO" position). The lighting switch and the auto-on headlight system (If equipped) work together to operate your lights as shown in the following chart:

ON: Lights ON
LIGHT: When it is light around the light sensor (5) (if equipped).
DARK: When it is dark around the light sensor (5) (if equipped).

Lighting switch position	Main lights to be operated	Ignition switch in the "LOCK" or "ACC" position		Ignition switch in the "ON" position	
		LIGHT	DARK	LIGHT	DARK
(1) OFF	Position lights, Tail lights, License plate lights	–	–	–	–
	Headlights	–	–	–	–
(2) AUTO (if equipped)	Position lights, Tail lights, License plate lights	–	–	–	ON
	Headlights	–	–	–	ON
(3)	Position lights, Tail lights, License plate lights	ON	ON	ON	ON
	Headlights	–	–	–	–
(4)	Position lights, Tail lights, License plate lights	ON	ON	ON	ON
	Headlights	ON	ON	ON	ON

To turn the lights on or off, twist the knob on the end of the lever. There are three or four positions:

OFF (1)
Front position lights, tail lights, license plate light, instrument lights and headlights are off.

AUTO (2) (if equipped)
This function works when the ignition switch is turned to “ON” position. The headlights, position lights, tail lights and license plate lights are turned on and off automatically according to the amount of outside light detected by a sensor. They go out automatically when you turn the ignition switch to “ACC” or “LOCK” position.

The light sensor (5) for sensing the amount of outside light is installed on the passenger’s seat side instrument panel.

When headlights are turned on and the lighting switch is in “AUTO” position, you can use the high beam assist (if equipped). For details, refer to “High beam assist” in “OPERATING YOUR VEHICLE” section.

⚠ CAUTION

If the light sensor area of the windshield is covered with mud, ice, or other similar substances, the headlights, position lights, tail lights and license plate lights may be turned on even when it is still light outside.
In this case, the daytime running light (D.R.L.) will be turned off.

NOTE:
- *Avoid covering the light sensor area of the windshield with a sticker. The sticker may impair the performance of the sensor and make the system unable to control operation of the lights correctly.*
- *If you turned the ignition switch to “ON” position and “AUTO” position remains selected, the headlights, position lights, tail lights and license plate lights come on automatically as it gets dark outside, even with the engine not running. Leaving the lights lit for a long time may lead to a completely discharged battery.*

(3)
Front position lights, tail lights, license plate lights and instrument lights are on, but headlights are off.

(4)
Front position lights, tail lights, license plate lights, instrument lights and headlights are on.

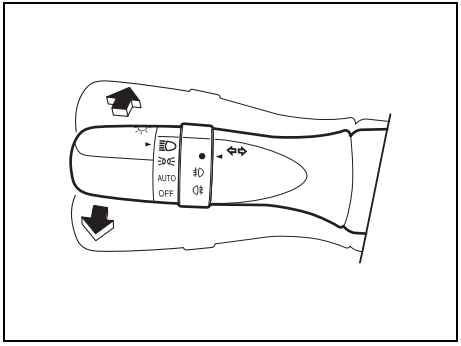

68PM00230

With the low beams on, push the lever forward to switch to the high beams (main beams) and subsequently pull the lever back toward you to switch to the low beams. When the high beams (main beams) are on, a light on the instrument cluster will come on. To momentarily activate the high beams (main beams) as a passing signal, pull the lever slightly toward you and release it when you have completed the signal.

Auto-on headlight system

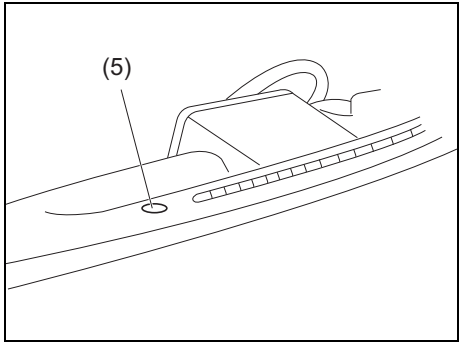

78RB02093

The auto-on headlight system automatically turns on all lights that are operated by the lighting switch on the steering column, when the following three conditions are all met.

Conditions for auto-on headlight system operation:
1) It is dark around the light sensor (5).
2) The lighting switch is in “AUTO” position.
3) The ignition switch is in the “ON” position.

This system is activated by a signal from the light sensor (5) on the passenger side of instrument panel. Do not cover the sensor (5). Otherwise, the system will not work correctly.

⚠ WARNING

To help avoid an accident due to reduced visibility, turn on your headlights before driving into a tunnel, parking structure, etc.

NOTE:
- *The light sensor reacts even to infrared rays, so it may operate incorrectly when there are strong infrared rays.*
- *For the lightning operation of Hong Kong, Macao and Singapore models, refer to “For Hong Kong, Macao and Singapore” in the “SUPPLEMENT” section.*

Light reminder buzzer

The interior buzzer continuously beeps if you open the driver’s door without turning off the headlights and position lights. This function is triggered under the following condition:
The headlights and/or position lights are on even after the ignition switch is turned to “LOCK” position.

The buzzer stops sounding when you turn off the headlights and position lights.

NOTE:
- *A message is indicated on the information display in the instrument cluster while the buzzer is sounding.*
- *For the light reminder buzzer of Hong Kong, Macao and Singapore models, refer to “For Hong Kong, Macao and Singapore” in the “SUPPLEMENT” section.*

Daytime running light (D.R.L.) system

When the engine is started, the daytime running lights are turned on by this system.

Conditions for D.R.L. system operation
1) The engine is running.
2) Headlights and front fog light are off.

NOTE:
Brightness of the daytime running lights is different from the brightness of the position lights, but it is not a malfunction.

Guide me light (if equipped)

Guide me light has two functions of “To home” and “To car” for improving your visibility in the dark.

“To home” function
Even after you leave the car, the ground will be illuminated for a short while with this function. You can turn on the front position lights and the headlights in the low beam setting for about 10 seconds after the ignition switch is turned “LOCK”.

To set the function:
1) Turn the lighting switch to “AUTO” position.
2) Turn the ignition switch to “LOCK” position.
3) Pull the lighting control lever toward you once and open the driver’s side door within 60 seconds. Or pull the lighting control lever toward you once while the driver’s side door is open.

To cancel the function:
Perform any of the following operations.
- Pull the lighting control lever toward you once.
- Turn the ignition switch to “ACC” or “ON” position.
- Turn the lighting switch to any other position than “AUTO” position.

NOTE:
- *When the “To home” is functioning, the front fog lights, rear fog light (if equipped) and the headlights (high beam) are not turned on.*
- *Lighting time of the “To home” function can be changed on the information display. Refer to “Information display” in this section.*

“To car” function
Before you get in the vehicle, the ground will be illuminated for a short while to easily lead the driver to the vehicle. If “UNLOCK” button of the keyless entry system transmitter (if equipped) is pressed while the lighting switch is positioned in “AUTO”, the front position lights and the headlights in the low beam are turned on for 10 seconds.
This function will operate only when it is dark outside the vehicle.

To cancel the function:
Perform any of the following operations.
- Lock the doors by using the keyless entry system transmitter, or the key in the driver’s door lock.
- Turn the ignition switch to “ACC” or “ON” position.
- Turn the lighting switch to any other position than “AUTO” position.

NOTE:
- *When the “To car” is functioning, the front fog lights, rear fog light (if equipped) and the headlights (high beam) are not turned on.*
- *Lighting time of the “To car” function can be changed on the information display. Refer to “Information display” in this section.*

Front fog light switch

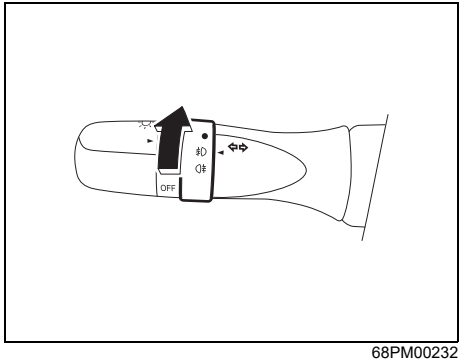

68PM00232

To turn the front fog light on, twist the knob as shown in the illustration with the position lights, tail lights and/or the headlights are on. When the front fog light is on, an indicator light on the instrument cluster will come on.

NOTE:

- *In some countries the lighting operation may be different from the above description according to local regulations.*
- *For the front fog light switch of Hong Kong, Macao and Singapore models, refer to "For Hong Kong, Macao and Singapore" in the "SUPPLEMENT" section.*

Rear fog light switch (if equipped)

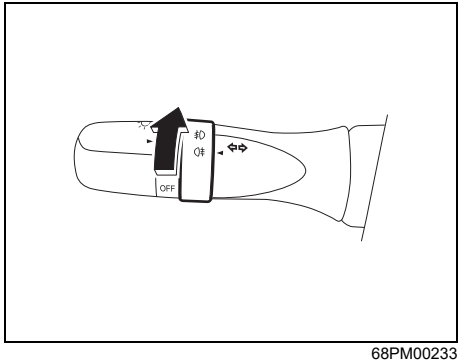

68PM00233

To turn the rear fog light on, twist the knob as shown in the illustration with the headlights on. When the rear fog light is on, an indicator light on the instrument cluster will come on.

.

Adjusting headlight pattern

Headlight pattern, left hand traffic

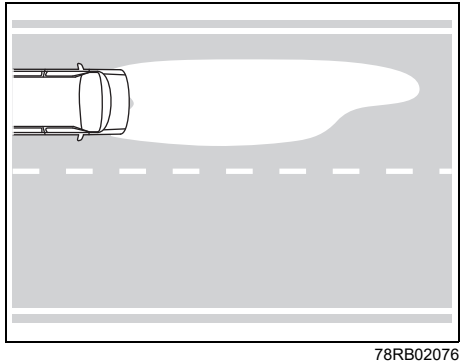

78RB02076

Headlight pattern, right hand traffic

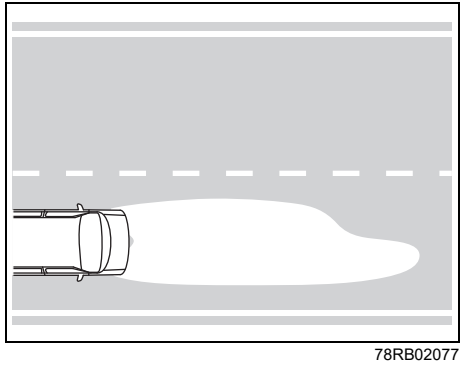

78RB02077

The headlight pattern must be adjusted to avoid dazzling oncoming motorists and can be set for right or left hand traffic.

LED headlights (if equipped)
You do not need to adjust the light pattern.

Halogen headlights (if equipped)
The light pattern may not be as good.
You should readjust the light pattern by masking the headlight lens.

Left hand drive vehicle
To readjust the light pattern by masking the headlight lens;
1) Copy the A and B templates as shown in the illustrations.
2) Transfer the template to a self-adhesive waterproof material and cut it out.
3) Position the self-adhesive templates at the right distance from the center mark of the headlight lens.
   Refer to the dimensions in the following list:

Right side headlight (A)

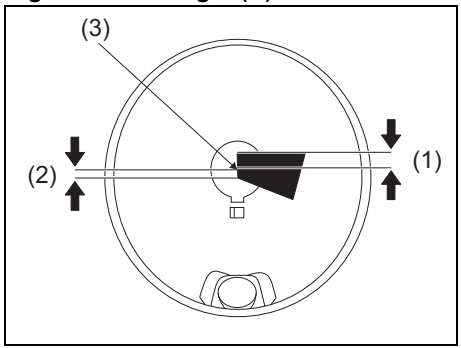

78RB02067

(1) Vertical line: approximately 10.0 mm
(2) Vertical line: approximately 5.0 mm
(3) Center mark

Left side headlight (B)

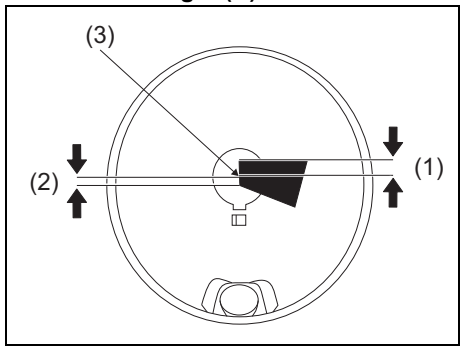

78RB02068

(1) Vertical line: approximately 10.0 mm
(2) Vertical line: approximately 5.0 mm
(3) Center mark

Right hand drive vehicle
To readjust the light pattern by masking the headlight lens;
1) Copy the C and D templates as shown in the illustrations.
2) Transfer the template to a self-adhesive waterproof material and cut it out.
3) Position the self-adhesive templates at the left distance from the center mark of the headlight lens.
   Refer to the dimensions in the following list:

Right side headlight (C)

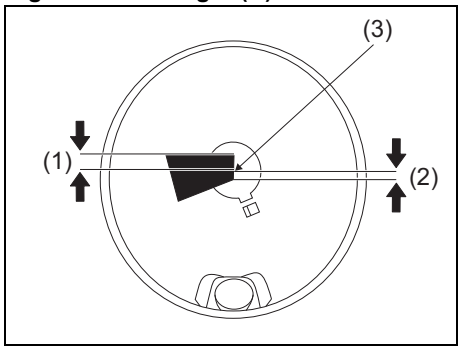

78RB02069

(1) Vertical line: approximately 10.0 mm
(2) Vertical line: approximately 5.0 mm
(3) Center mark

Left side headlight (D)

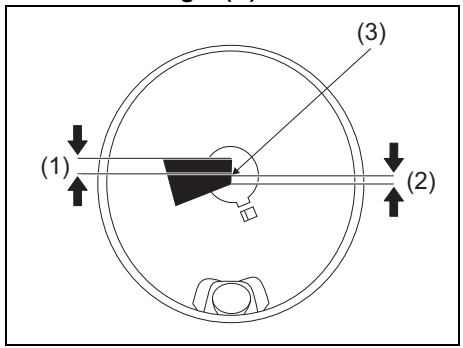

78RB02070

(1) Vertical line: approximately 10.0 mm
(2) Vertical line: approximately 5.0 mm
(3) Center mark

Templates for halogen headlights

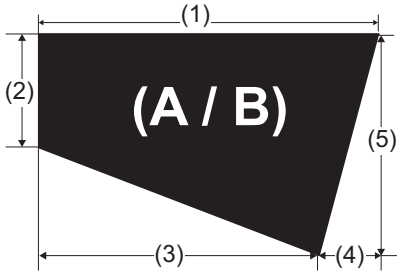

78RB02100

(1) 45 mm (1.8 in.)
(2) 15mm (0.6 in.)
(3) 37 mm (1.5 in.)
(4) 8 mm (0.3 in.)
(5) 29 mm (1.2 in.)

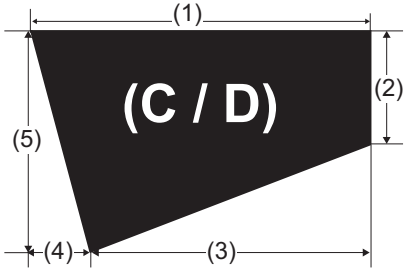

78RB02101

(1) 45 mm (1.8 in.)
(2) 15mm (0.6 in.)
(3) 37 mm (1.5 in.)
(4) 8 mm (0.3 in.)
(5) 29 mm (1.2 in.)

Headlight leveling switch (if equipped)

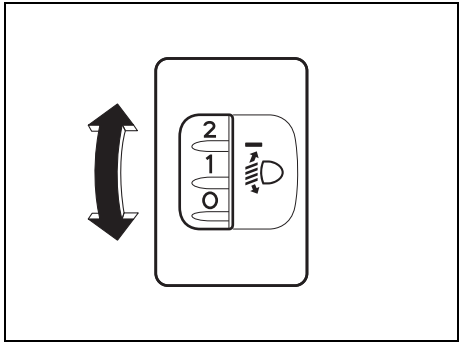

75RM008

Level the headlight beam according to the load condition of your vehicle by turning this switch. The chart shows the appropriate switch position for different vehicle load conditions.

For vehicles with halogen headlight

Vehicle Load Condition	Switch Position
Driver only	0
Driver + 1 passenger (in front seat)	0.5
Driver + 3 passengers, no cargo	2.0
Driver + 3 passengers, cargo added	3.0
Driver + full cargo	4.5

For vehicles with LED headlight

Vehicle Load Condition	Switch Position
Driver only	0
Driver + 1 passenger (in front seat)	0.5
Driver + 3 passengers, no cargo	2.0
Driver + 3 passengers, cargo added	2.5
Driver + full cargo	4.0

Headlight washer switch (if equipped)

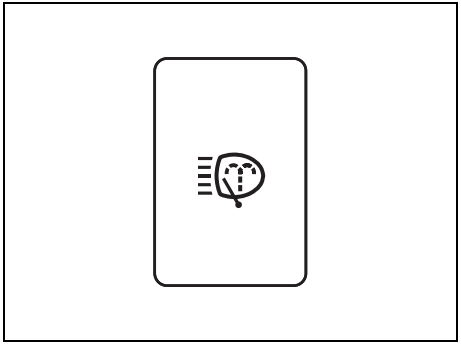

78RB02057

With the ignition switch in the “ON” position or press the engine switch to change the ignition mode to ON and the headlights are turned on, push the headlight washer switch to wash the headlight lenses. Washer fluid is sprayed for half a second. If necessary, push the switch again.
Under the same conditions, if you operate the windshield washer two or more times successively at short intervals, the headlight washers also operate automatically but only once at the same time as the first windshield washer operation.

Turn signal control lever

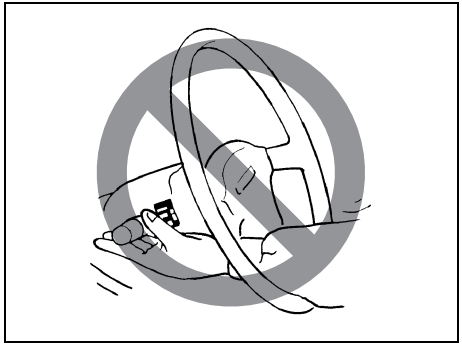

57L21128

⚠ WARNING

To avoid possible injury, do not operate controls by reaching through the steering wheel.

Turn signal operation

With the ignition switch in “ON” position or the ignition mode to ON, move the lever upward or downward to activate the right or left turn signals.

Normal turn signal

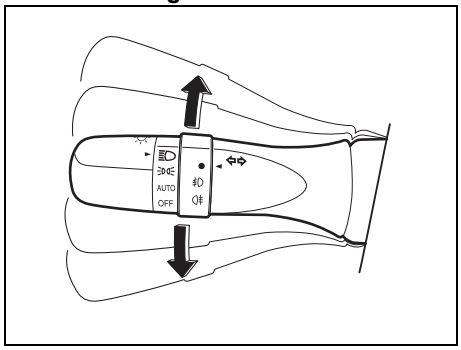

68PM00234

- Move the turn signal control lever as follows for left hand drive vehicles and vice-versa for right hand drive vehicles:
  – Turning left: Move the lever downward.
  – Turning right: Move the lever upward
- When you move the lever, the turn signal lights and the turn signal light indicators on the instrument cluster will flash simultaneously.
- When the turn is completed, the signal will cancel and the lever will return to its normal position.
- When you move the lever to its original position, the turn signal lights as well as the turn signal light indicators on the instrument cluster will be turned off.
- The turn signal control lever in the illustration is a typical example; the actual equipment depends on the vehicle type.

NOTE:
If the angle by which you turn the steering wheel is small, the lever will not return automatically to its original position. In this case, return the lever to its original position manually.

Lane change signal

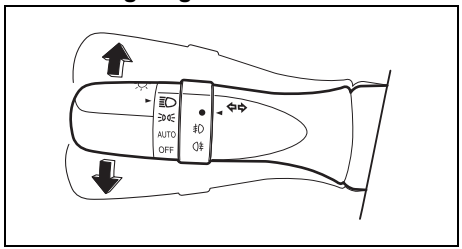

68PM00235

Move and hold the lever slightly in the direction in which you want to turn to change lanes.

- The turn signal and its indicator flash while the lever is held at the moved position.
- The turn signal and its indicator flash 3 times even if you returned the lever immediately after the activation.

NOTE:
You can customize the setting for the number of flashing times of the turn signal and its indicator (1 to 4 times). Ask an authorized SUZUKI dealer or a qualified workshop for the customization.

Hazard warning switch

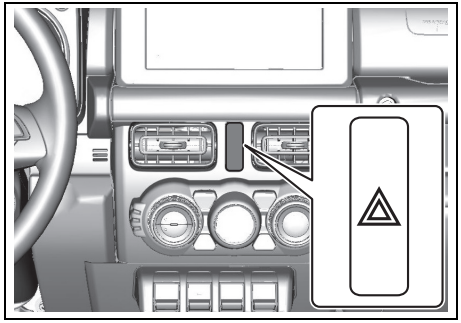

78RB02058

Push the hazard warning switch to activate the hazard warning lights. All turn signal lights and both turn signal indicators will flash simultaneously. To turn off the lights, push the switch again.
Use the hazard warning lights to warn other drivers of possible risk of traffic hazard when you park your vehicle in case of emergency.

NOTICE

If you keep the hazard warning lights turned on for long period of time without the engine running, the lead-acid battery may run out.
Do not keep the hazard warning lights on for long hours without the engine running.

Windshield wiper and washer lever

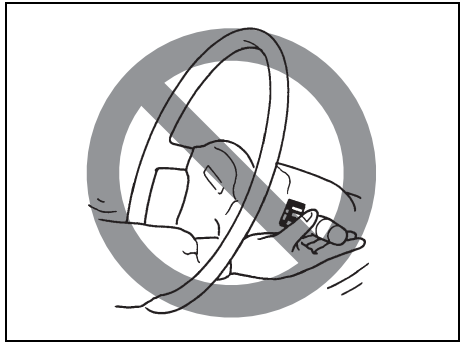

65D611

⚠ WARNING

To avoid possible injury, do not operate controls by reaching through the steering wheel.

Wiper and washer operation

When the ignition switch is in “ON” position or the ignition mode to ON, you can use the wiper/washer lever.

When the wipers are under heavy load such as covered by snow, the breaker will be activated and the wipers will stop operating to protect the wiper motor from overheating.
If the wiper stops during operation, do the following methods.

1) Stop the vehicle in a safe place, and turn the engine off.
2) Move the wiper lever and switch to “OFF” position.
3) Remove obstacles such as snow on the wipers.
4) After a while, when the temperature of the wiper motor becomes low enough, the breaker will be reset automatically and the wipers will be able to use.

If you cannot use the wipers after a while, there may be another problem. Ask an authorized SUZUKI dealer or a qualified workshop to have the wipers inspected.

Windshield wipers

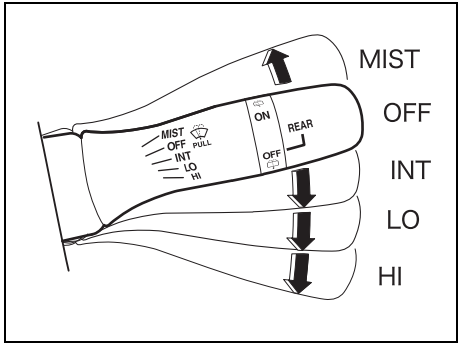

85U020380

To turn the windshield wipers on, move the lever down to one of the three operating positions. In “INT” position, the wipers operate intermittently. The “INT” position is very convenient for driving in mist or light rain. In “LO” position, the wipers operate at a steady low speed. In “HI” position, the wipers operate at a steady high speed. To turn off the wipers, move the lever back to “OFF” position.

Move the lever up and hold it to “MIST” position, the windshield wipers will turn on continuously at low speed.

Windshield washer

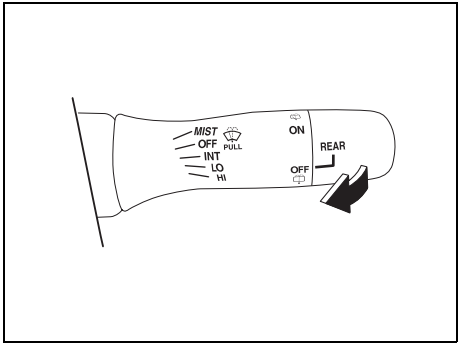

85U020390

To spray windshield washer fluid, pull the lever toward you. The windshield wipers will automatically turn on at low speed if they are not already on and your vehicle is equipped with “INT” position.

⚠ WARNING

- **To prevent windshield icing in cold weather, turn on the defroster to heat the windshield before and during windshield washer use.**
- **Do not use radiator antifreeze in the windshield washer reservoir. It can severely impair visibility when sprayed on the windshield, and can also damage your vehicle’s paint.**

NOTICE

To help prevent damage to the windshield wiper and washer system components, you should take the following precautions:

- **Do not continue to hold in the lever when there is no windshield washer fluid being sprayed or the washer motor can be damaged.**
- **Do not attempt to remove dirt from a dry windshield with the wipers or you can damage the windshield and the wiper blades. Always wet the windshield with washer fluid before operating the wipers.**
- **Clear ice or packed snow from the wiper blades before using the wipers.**
- **Check the washer fluid level regularly. Check it often when the weather is bad.**
- **Fill a reservoir to 3/4 level with washer fluid for its expansion, if temperature falls low enough to freeze the fluid.**

Rear window wiper/washer switch

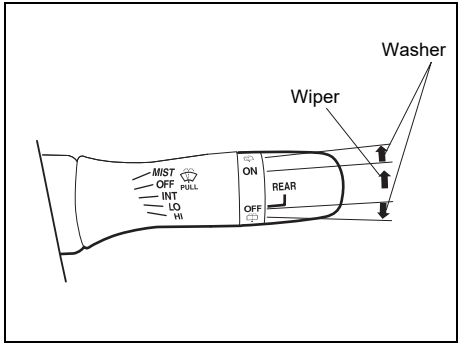

85U020400

To turn the rear wiper on, twist the rear wiper switch on the end of the lever forward to “ON” position. To turn the rear wiper off, twist the switch rearward to “OFF” position.

With the rear wiper in “OFF” position, twist the switch rearward and hold it there to spray window washer fluid.

With the rear wiper in “ON” position, turn the switch forward and hold it there to spray window washer fluid.

NOTICE

Clear ice or snow from the rear window and rear wiper blade before using the rear wiper. Accumulated ice or snow could prevent the wiper blade from moving, causing damage to the wiper motor.

Tilt steering lock lever

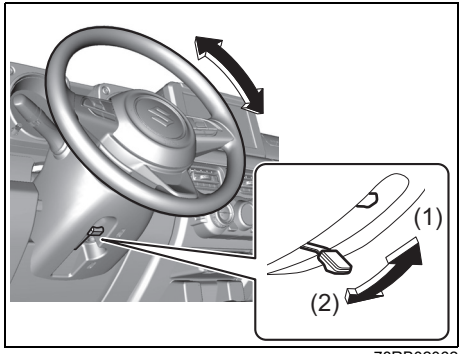

78RB02062

(1) LOCK
(2) UNLOCK

The lock lever is located under the steering column. To adjust the steering wheel height:

1) Push down the lock lever to unlock the steering column.
2) Adjust the steering wheel to the desired height and lock the steering column by pulling up the lock lever.
3) Try moving the steering wheel up and down to check that it is securely locked in position.

⚠ WARNING

Never attempt to adjust the steering wheel while the vehicle is moving or you could lose control of the vehicle.

Horn

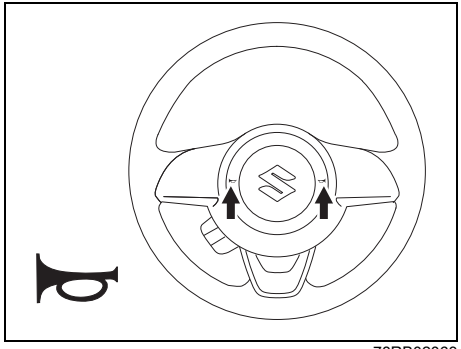

78RB02063

Press the horn button of the steering wheel to sound the horn. The horn will sound with the ignition switch in any position or any ignition mode.

Heated rear window switch / heated outside rearview mirror switch (if equipped)

Type 1

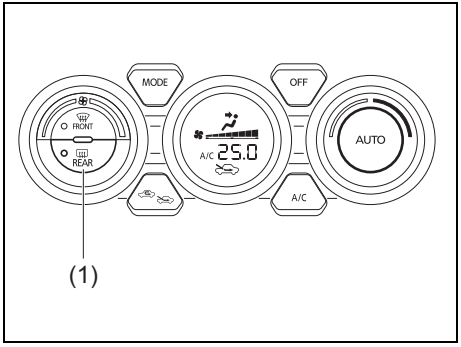

78RB02064

Type 2

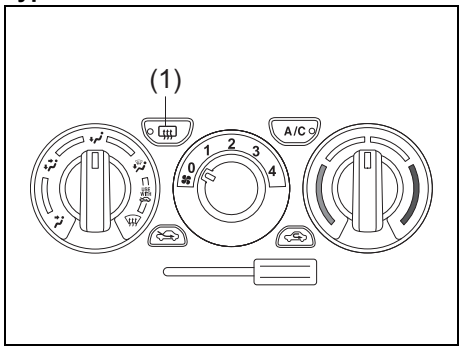

78RM20030

When the rear window is misted, push this switch (1) to clear the window.

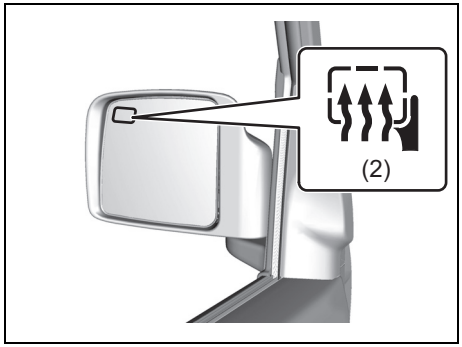

78RB02066

If the outside rearview mirror has the mark (2), it is also equipped with the heated outside rearview mirrors. When you push the switch (1), both the heated outside rearview mirrors and the heated rear window will operate simultaneously.

An indicator light will come on when the defogger is on. The defogger will work only when the engine is running. To turn off the defogger, push the switch (1) again.

NOTICE

The heated rear window and the heated outside rearview mirrors (if equipped) use a large amount of electricity. Turn off the switch after the window and mirrors have become clear.

NOTE:

- *The defogger will work only when the engine is running.*
- *The defogger will automatically turn off after the defogger remains on for 15 minutes to prevent discharging of the lead-acid battery.*

Vehicle loading

Your vehicle is designed for specific weight capacities. The weight capacities of your vehicle are indicated by the Gross Vehicle Weight Rating (GVWR) and the Permissible maximum Axle Weight (PAW, front and rear). The GVWR and PAW (front and rear) are listed in “SPECIFICATIONS” section.

GVWR – Maximum permissible overall weight of the fully loaded vehicle (including all the occupants, accessories and cargo plus the trailer nose weight if towing a trailer).
PAW (front and rear) – Maximum permissible weight on an individual axle.

Actual weight of the loaded vehicle and actual loads at the front and rear axles can only be determined by weighing the vehicle. Compare these weights to the GVWR and PAW (front and rear). If the gross vehicle weight or the load on either axle exceeds these ratings, you must remove enough weight to bring the load down to the rated capacity.

⚠ WARNING

Never overload your vehicle. The gross vehicle weight (sum of the weights of the vehicle, all the occupants, accessories, cargo plus trailer nose weight if towing a trailer) must never exceed the Gross Vehicle Weight Rating (GVWR). In addition, never distribute a load so that the weight on either the front or rear axle exceeds the Permissible maximum Axle Weight (PAW).

⚠ WARNING

Always distribute cargo evenly. To avoid personal injury or damage to your vehicle, always secure cargo to prevent it from shifting if the vehicle moves suddenly. Place heavier objects on the floor and as far forward in the cargo area as possible. Never pile cargo higher than the top of the seat backs.

Trailer towing

Observe any country-specific regulations when towing a trailer and using a tow bar.

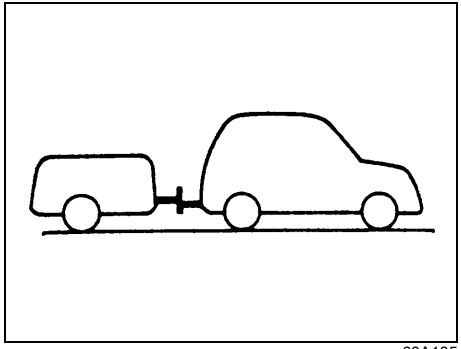

60A185

Your vehicle is primarily designed for transporting passengers and luggage. Towing a trailer can adversely affect vehicle handling, durability and fuel economy. Nevertheless, if suitably equipped, your vehicle can be used to tow a trailer which does not exceed the towing capacity specified below:

Maximum towing capacity (gross trailer weight; trailer with integrated drawbar, and cargo)

Braked trailer: 1300 kg (2866 lbs)
Unbraked trailer: 350 kg (772 lbs)

To load your vehicle and trailer properly, you must know how to measure gross trailer weight and trailer nose weight.

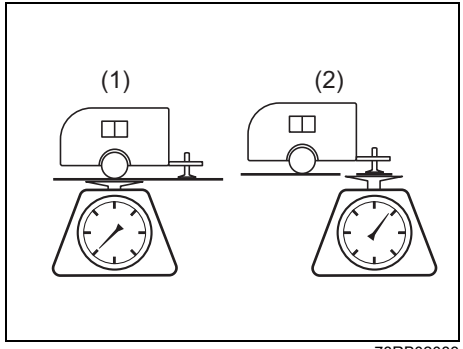

78RB02083

(1) Gross trailer weight
Gross trailer weight is the weight of the trailer with integrated drawbar plus all the cargo in it. You can measure gross trailer weight by putting the fully loaded trailer on a vehicle scale.

(2) Permissible nose weight
Nose weight is the downward force applied on the towing hitch ball by the trailer coupler, with the trailer fully loaded and the coupler at its normal towing height. This weight can also be measured using a bathroom scale.

The maximum towing capacity listed above(1300kg) is only applicable up to 1000m above sea level. In high altitude regions above 1000m, combined weight of the maximum towing capacity (gross trailer weight) and permissible gross vehicle weight (GVWR) must be reduced by 10% for every extra 1000m.

⚠ WARNING

For vehicles equipped with the Dual Sensor Brake Support II (DSBS II), if your vehicle is used to tow a trailer, press the Dual Sensor Brake Support II (DSBS II) OFF switch to turn off the Dual Sensor Brake Support II (DSBS II). If not, accidents related to the system being turned on may occur.

⚠ CAUTION

When towing by your vehicle equipped with automatic transmission on a long steep uphill, try to take some rest on the way at a safe place to prevent overheat or damage of the engine or transmission.

NOTICE

Trailer towing puts additional stress on the engine, transmission and brakes of your vehicle. Never tow a trailer during the first 1000 km (600 miles) of vehicle operation.

Tow bars

Only use a tow bar that is designed to attach to the chassis of your vehicle, and a hitch that is designed to bolt to this tow bar. We recommend that you use a genuine SUZUKI tow bar kit (available as an option), or equivalent.

⚠ WARNING

Never use a tow bar which attaches to the axle or the bumper of your vehicle.

For vehicles where the towing device blocks any of the lights or license plate, observe the following points:
- Do not use the towing devices that cannot be easily removed or repositioned.
- The towing devices must be removed or repositioned when not in use.

Safety chains

Always attach safety chains between your vehicle and the trailer. Cross safety chains under the nose of the trailer so that the nose will not drop to the road if the trailer becomes separated from the tow bar. Follow the manufacturer's recommendation for attaching safety chains. Always leave just enough slack to permit full turning. Never allow safety chains to drag on the road.

⚠ WARNING

Never attach safety chains to the bumper of your vehicle. Secure connections so that they cannot come loose.

Trailer lights

Check that your trailer is equipped with lights which meet local requirements. Always check for the proper operation of all trailer lights before you start to tow.

⚠ WARNING

Never connect trailer lights directly into your vehicle's electrical system, or electrical system damage may occur.

Brakes

⚠ WARNING

If the trailer is equipped with the brakes, follow all instructions provided by the manufacturer. Never connect to the brake system of your vehicle and never take an electrical supply directly from the wiring harness.

Mirrors

Check if your vehicle's mirrors meet local requirements for mirrors used on towing vehicles. If they do not, you must install the required mirrors before you tow.

Vehicle/trailer loading

The weight of your loaded trailer (gross trailer weight) should never exceed the towing capacity.

Distribute cargo in your trailer so that the nose weight is about 10% of gross trailer weight, but does not exceed "Maximum vertical load" of 75 kg (165 lbs), and does not fall below 25 kg (55 lbs) or 4%, whichever is heavier, on trailer hitch point. You should measure gross trailer weight and nose weight before towing to check that your load is properly distributed.

⚠ WARNING

Improper weight distribution of your trailer may result in poor vehicle handling and swaying of the trailer. Always check that the trailer nose weight is about 10% of gross trailer weight, but does not exceed "Maximum vertical load" of 75 kg (165 lbs), and does not fall below 25 kg (55 lbs) or 4%, whichever is heavier, on trailer hitch point. Also check that the cargo is properly secured. Failure to observe this requirement may result in an accident.

⚠ WARNING

- **Never overload cargo on your trailer and your vehicle. Gross trailer weight must never exceed towing capacity. Gross vehicle weight (sum of the weights of the vehicle, all the occupants, accessories including tow bars and a trailer hitch, cargo and trailer nose weight) must never exceed the Gross Vehicle Weight Rating (GVWR) listed in "SPECIFICATIONS" section, except as described in NOTE below.**
- **It is dangerous and may be illegal to transport people in a trailer.**

NOTE:
Only in the case of towing a trailer, GVW can be exceeded by not more than 40 kg (88 lbs), if road traffic legislation allows it.

Additional trailer towing warnings

⚠ WARNING

Connect trailer lights and hook up safety chains every time you tow.

NOTICE

- **Because towing a trailer puts additional stress on your vehicle, more frequent maintenance will be required than under normal driving conditions. Follow the schedule in "Maintenance recommended under severe driving conditions".**
- **The additional load will affect fuel consumption, durability and performance of the vehicle as well.**

⚠ WARNING

Your vehicle should be handled in a different way when towing a trailer. For the safety of yourself and others, observe the following precautions:

- **Practice turning, stopping, and reversing before you begin towing a trailer in traffic. Do not tow a trailer in traffic until you are confident that you can handle the vehicle and trailer safely.**
- **Never exceed local towing speed limits or 80 km/h (50 mph), whichever is lower.**
- **Never drive at a speed that causes shaking or swaying of the trailer. If you notice even the slightest sign of shaking or swaying, slow down.**
- **When roads are wet, slippery or rough, drive at a slower speed than you would on dry or smooth roads. Failure to slow down when road conditions are bad can result in loss of control.**
- **Always have someone guide you when reversing.**

(Continued)

⚠ WARNING

(Continued)

- **Always admit greater stopping distance. Stopping distance is increased when you tow a trailer. For each 16 km/h (10 mph) of speed, allow at least one vehicle and trailer length between you and the vehicle ahead. Allow a greater stopping distance if roads are wet or slippery.**
- **If the trailer has over-run brakes, apply the brakes gradually to avoid snatching caused by the trailer wheels locking.**
- **Slow down before corners and maintain a steady speed while cornering. Deceleration or acceleration while cornering can result in loss of control. Remember that a larger than normal turning radius is needed because the trailer wheels will go inside than vehicle's wheels.**
- **Avoid sudden acceleration and stopping of the vehicle. Do not make quick maneuvers unless they are necessary.**
- **Slow down in cross winds and be prepared for gusts of wind from large passing vehicles.**

(Continued)

⚠ WARNING

(Continued)

- **Be careful when overtaking other vehicles. Allow enough room for your trailer before changing lanes, and use turn signal lights properly in advance.**
- **Slow down and shift into a lower gear for better engine braking before you reach long or steep downhill grades. It is hazardous to attempt downshifting while you are descending a hill.**
- **Do not step on the brake pedal excessively. This could cause the brakes to over-heat resulting in reduced braking efficiency. Use engine braking as much as possible.**
- **Because of the added trailer weight, your engine may overheat on hot days when going up long or steep hills. Pay attention to your engine coolant temperature. If it indicates overheating, pull off the road and stop the vehicle in a safe place. Refer to "Engine trouble: Overheating" in "EMERGENCY SERVICE" section.**

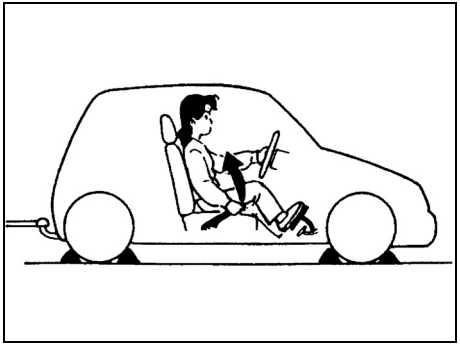

60A186

⚠ WARNING

When parking your vehicle and connected trailer, always use the following procedure:

1) **Apply the vehicle's brakes firmly.**
2) **Have another person place wheel chocks under the wheels of the vehicle and the trailer while you are holding the brakes.**
3) **Slowly release the brakes until the wheel chocks absorb the load.**
4) **Fully engage the parking brake.**
5) **Manual transmission – turn off the engine, then shift into reverse or first gear.**
   Automatic transmission – shift into "P" (Park) and turn off the engine.

(Continued)

⚠ WARNING

(Continued)

When starting out after parking:

1) **Depress the clutch and start the engine.**
2) **Have another person remove the chocks.**
3) **Shift into gear, release the parking brake, and slowly pull away from the chocks.**
4) **Stop, apply the brakes firmly and hold them.**

Trailer hitch (tow bar) installation points
Each arrow shows fixing points for Suzuki's genuine tow bar kit. For details, follow the instruction provided with the tow bar kit.

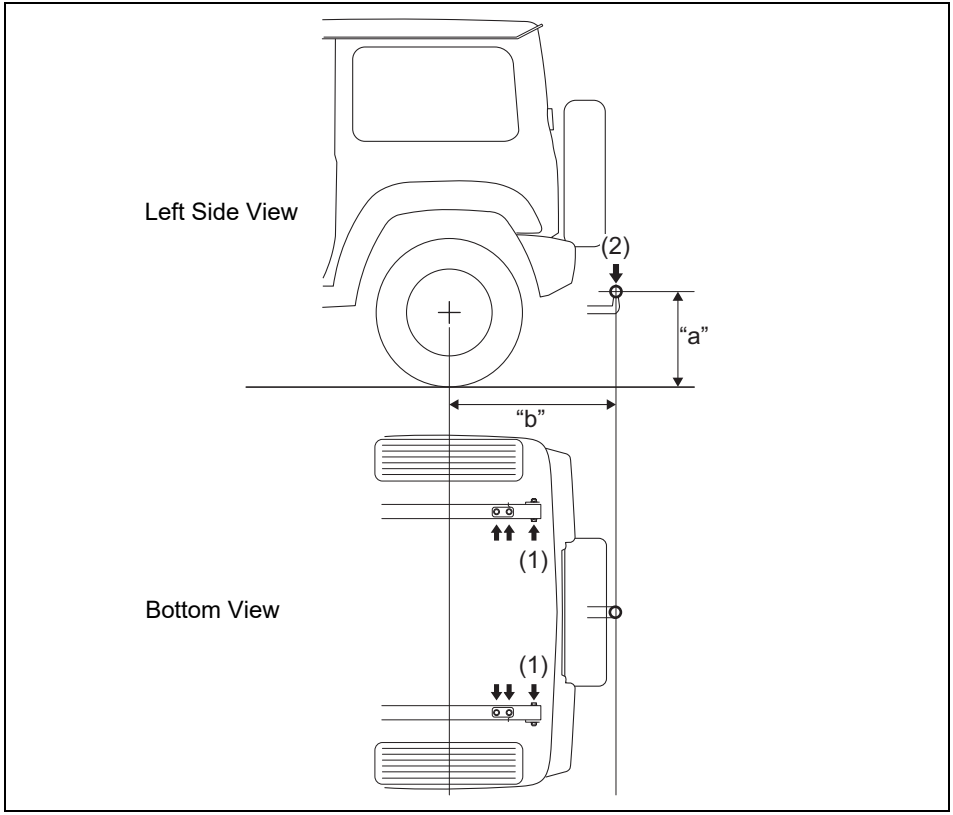

78RB02084

(1) Fixing points on vertical (side) surfaces

(2) Maximum vertical load on trailer hitch point
(EU): 75 kg (165 lbs)

Trailer hitch ball height "a"
450 - 490 mm (17.7 - 19.3 in.)
Maximum permissible overhang "b"
787 mm (31.0 in.)

MEMO

OPERATING YOUR VEHICLE

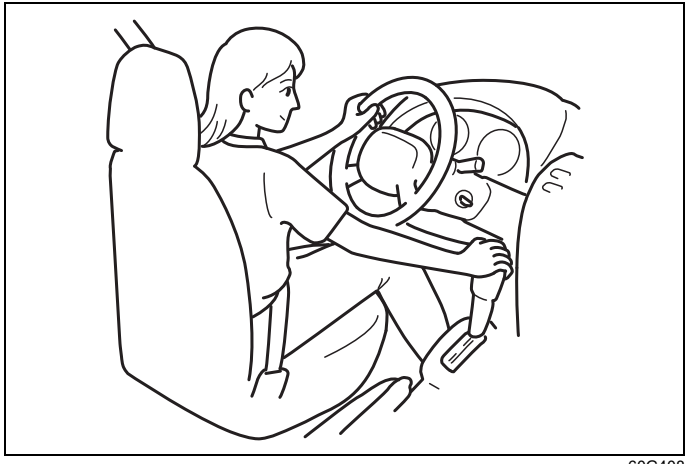

60G408

Daily inspection checklist 3-1
Engine oil consumption 3-2
Ignition switch (Vehicle without keyless push start system) 3-3
Engine switch (Vehicle with keyless push start system) 3-5
Parking brake lever 3-7
Pedal 3-9
Keyless push start system (if equipped) 3-10
Starting / stopping engine (Vehicle without keyless push start system) 3-14
Starting / stopping engine (Vehicle with keyless push start system) 3-15
Gasoline Particulate Filter (GPF) (if equipped) 3-19
Idling stop system (if equipped) 3-20
Air conditioning system settings by idling stop system (if equipped) 3-29
Using transmission 3-29
When driving the vehicle with Automatic Transmission (AT) (if equipped) 3-34
Characteristics of the vehicle with Automatic Transmission (AT) (if equipped) 3-35
How to drive the vehicle with Automatic Transmission (AT) (if equipped) 3-36
Transfer lever 3-40
SUZUKI SAFETY SUPPORT (if equipped) 3-47
Rearview camera (if equipped) 3-116
Emergency Stop Signal (ESS) 3-123
Braking 3-124
Electronic Stability Program (ESP®) 3-126

Daily inspection checklist

Before driving

⚠ WARNING

If the vehicle is damaged, or if a warning light or buzzer indicates an abnormality, ask an authorized SUZUKI dealer or a qualified workshop to have your vehicle inspected and repaired immediately before driving. Continued operation in this condition may result in vehicle fire or serious malfunction.

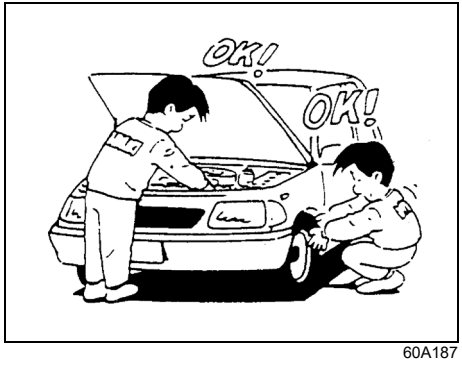

60A187

1) Check that windows, mirrors, lights and reflectors are clean and unobstructed.
2) Visually check the tyres for the following points:
   – the depth of the tread groove
   – abnormal wear, cracks and damage
   – loose wheel nuts
   – existence of foreign material such as nails, stones, etc.

Refer to “Tyres” in “INSPECTION AND MAINTENANCE” section for details.

3) Look for fluid and oil leakage.

NOTE:
It is normal for water to drip from the air conditioning system while and after use.

4) Check that the hood is fully closed and latched.
5) Check the headlights, turn signal lights, brake lights and horn for proper operation.
6) Adjust the seat and head restraint.
7) Check the brake pedal and the parking brake lever.
8) Adjust the mirrors.
9) Check that you and all passengers have properly fastened by the seat belts.
10) Check that all warning lights come on as the ignition switch is turned to “ON” position or press the engine switch to change the ignition mode to ON.
11) Check all gauges.
12) Check that the brake system warning light turns off when the parking brake is released.

Once a week, or each time you fill your fuel tank, perform the following under-hood checks:

1) Engine oil level
2) Coolant level
3) Brake fluid level
4) Battery fluid (acid) level
5) Windshield washer fluid level
6) Hood latch operation
   Pull the hood release handle inside the vehicle. Check that you cannot open the hood further without releasing the secondary latch. Close the hood securely after checking for proper latch operation. See the item “All latches, hinges and locks” of “Chassis, body and others” in “Maintenance schedule” in “INSPECTION AND MAINTENANCE” section for lubrication schedule.

⚠ WARNING

Check that the hood is fully closed and latched before driving. If it is not, it can fly up unexpectedly during driving, obstructing your view and resulting in an accident.

Once a month, or each time you fill your fuel tank, check the tyre pressure using a tyre pressure gauge. Also check the tyre pressure of the spare tyre.

Inspection of the engine compartment

When the vehicle has not been used for a long period of time, check that there are no nests or twigs etc.,
(combustibles or objects that interfere with the operation of the cooling fan (radiator fan)) brought by small animals
in the engine compartment.
Failure to do so may result in vehicle fire or serious malfunction.

Engine oil consumption

It is normal for the engine to consume some engine oil during normal vehicle operation.

The amount of engine oil consumption depends on viscosity and quality of the oil and your driving conditions.
More oil is consumed during high-speed driving and when there is frequent acceleration and deceleration. Under high loads, your engine also will consume more oil.
A new engine also consumes more oil, since its pistons, piston rings and cylinder walls have not yet become conditioned. New engines reach the normal level of oil consumption only after approximately 5000 km (3000 miles) driving.

Oil consumption:
Max. 1.0 L per 1000 km
(1 Qt. per 600 miles)

When judging the amount of oil consumption, note that the oil may become diluted and it is difficult to judge the accurate oil level.
As an example, if a vehicle is used for repeated short trips, and consumes a normal amount of oil, the dipstick may not show any drop in the oil level at all, even after 1000 km (600 miles) or more of driving. This is because the oil gradually becomes diluted with fuel or moisture, making it appear that the oil level has not changed.
You should also be aware that the diluting ingredients evaporate out when the vehicle is subsequently driven at high speeds, such as on an expressway, making it appear that oil is excessively consumed after high-speed driving.

Ignition switch (Vehicle without keyless push start system)

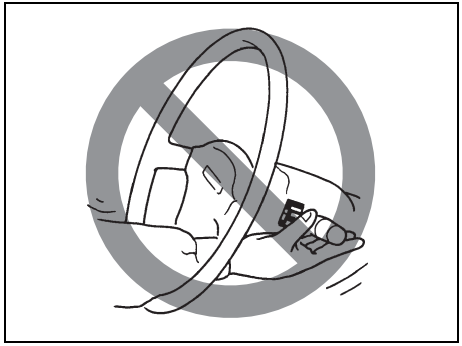

65D611

⚠ WARNING

To avoid possible injury, do not operate controls by reaching through the steering wheel.

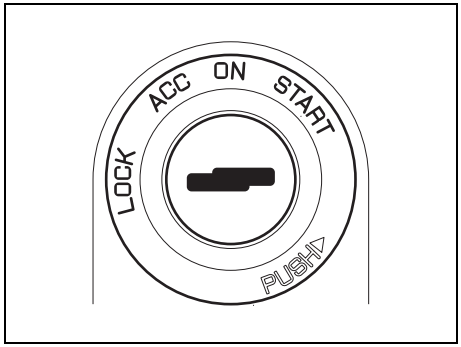

68PH00310

The ignition switch has the following four positions:

LOCK
This is the normal parking position. It is the only position in which the key can be removed.

Manual transmission

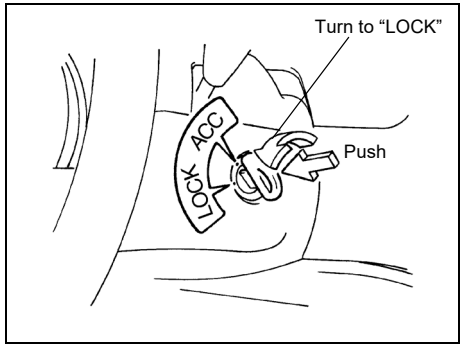

60G033

- **Manual transmission vehicles**
  You must push in the key to turn it to “LOCK” position. It locks the ignition, and prevents normal use of the steering wheel after the key is removed.

- **Automatic transmission vehicles**
  The gearshift lever must be in “P” (Park) position to turn the key to “LOCK” position. It locks the ignition and prevents normal use of the steering wheel and gearshift lever.

To release the steering lock, insert the key and turn it clockwise to one of the other positions. If you have trouble turning the key to unlock the steering wheel, try turning the steering wheel slightly to the right or left while turning the key.

ACC
Accessories such as the radio can operate, but the engine is off.

ON
This is the normal operating position. All electrical systems are on.

START
This is the position for starting the engine using the starter motor. The key should be released from this position as soon as the engine starts.

Ignition key reminder
A buzzer sounds intermittently to remind you to remove the ignition key if it is in the ignition switch when the driver's door is opened.

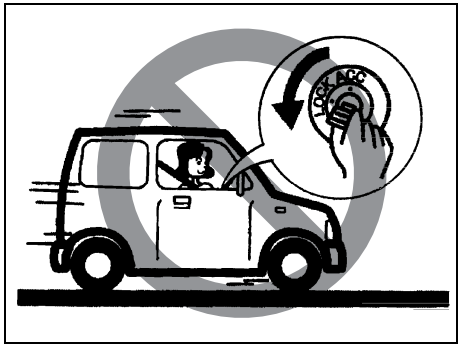

81A297S

⚠ WARNING

- **Never return the ignition switch to "LOCK" position and remove the ignition key while the vehicle is moving. The steering wheel will lock and you will not be able to steer the vehicle.**

(Continued)

⚠ WARNING

(Continued)

- **Always return the ignition switch to "LOCK" position and remove the ignition key when leaving the vehicle even only for a short time. Also do not leave children alone in a parked vehicle. Unattended children may be able to start the vehicle or shift the transmission into neutral, which could result in an accident. There is also a danger that children may injure themselves by playing with the power windows or other moving features of the vehicle. In addition, heat build-up or extremely cold temperatures inside the vehicle can be fatal to children.**

NOTICE

- **For protection of a lead-acid battery and a starter motor, do not use the starter motor by turning the key to "START" for more than 12 seconds at a time. If the engine does not start, turn the key to "LOCK" position and wait for more than 30 seconds before trying again. If the engine does not start after several attempts, consult an authorized SUZUKI dealer or a qualified workshop.**
- **Do not leave the ignition switch in "ON" position if the engine is not running as the lead-acid battery will discharge.**

Engine switch (Vehicle with keyless push start system)

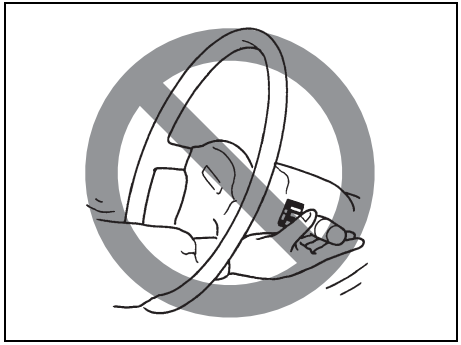

65D611

⚠ WARNING

To avoid possible injury, do not operate controls by reaching through the steering wheel.

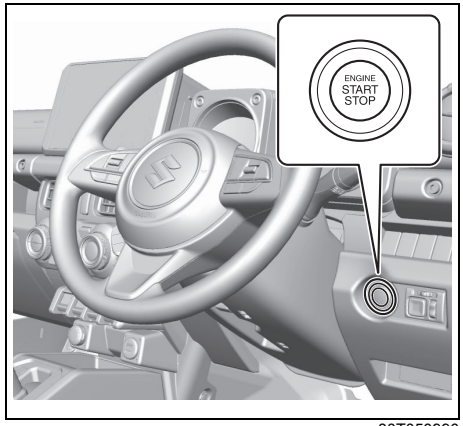

80T050990

LOCK (OFF)

This mode is for parking the vehicle. When this mode is selected by pressing the engine switch and then any door (including the tailgate) is opened or closed, the steering will be locked automatically.

ACC
Press the engine switch to select this ignition mode to use such electric equipment as the audio system, outside rearview mirrors and accessory socket with the engine off. When this position is selected, the information display in the instrument cluster shows the following message.



69T040140

"IGNITION SWITCH POSITION ACC"

ON
- **With the engine off**
  You can use such electric equipment as the power windows and wipers with the engine off. When this ignition mode is selected by pressing the engine switch, the information display in the instrument cluster shows the following message.



69T040150

"PUSH START SWITCH"

- **With the engine on**
  All electric equipment is operational. The vehicle can be driven when you have selected this ignition mode by pressing the engine switch.

START
Provided you have the keyless push start system remote controller with you, the engine automatically starts when you press the engine switch to select this ignition mode after placing the gearshift lever in "P" (Park) position and depressing the brake pedal. (If you need to restart the engine while the vehicle is moving, shift into "N".)

NOTICE

Do not leave the engine switch in ACC or ON mode when the engine is not running. Avoid using the radio or other electric accessories for a long time when the engine switch is in ACC or ON mode when the engine is not running, otherwise the lead-acid battery may discharge.

NOTE:
- *The steering will be unlocked when you press the engine switch to change the ignition mode from LOCK (OFF) to ACC or ON.*
- *You do not need to keep the engine switch pressed until the engine starts.*
- *In the presence of strong radio wave or noise, you may not be able to change the ignition mode to ACC or ON or to start the engine using the engine switch. In this case, the information display in the instrument cluster will show the following message.*

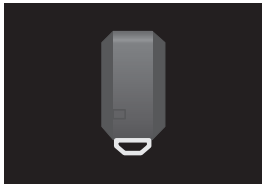

69T040180

"KEY FOB
NOT
DETECTED"

Unreleased steering lock warning

If the steering lock remains engaged when you press the engine switch to change the ignition mode to ON, the information display in the instrument cluster shows the following message and you cannot start the engine. If this happens, press the engine switch, turning the steering wheel to right or left.



69T040160

"PRESS START
SW WHILE
TURNING
STRG WHL"

NOTE:
The steering lock may not be released and the immobilizer / keyless push start system warning light turns on if some load is applied on the steering wheel. If this happens, turn the steering wheel system to the right or left to relieve it from the load before you press the engine switch again to change to the desired ignition mode.

Parking brake lever

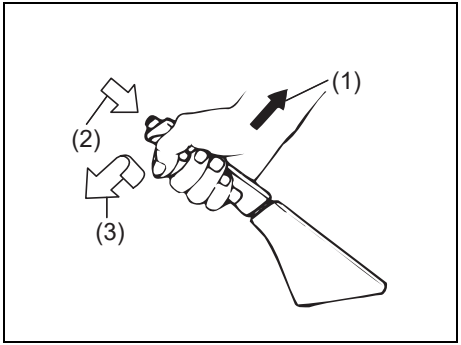

54G039

(1) To set
(2) To release
(3) To release

The parking brake lever is located between the front seats. To set the parking brake, depress the brake pedal and pull the parking brake lever all the way up. To release the parking brake, depress the brake pedal and pull up slightly on the parking brake lever, push the button on the end of the lever with your thumb, and lower the lever to its original position.

For automatic transmission vehicles, always set the parking brake before moving the gearshift lever to “P” (PARK) position. If you park on an incline and shift into “P” before setting the parking brake, the weight of the vehicle may make it difficult to shift out of “P” when you are ready to drive the vehicle.

When preparing to drive the vehicle, move the gearshift lever out of “P” position before releasing the parking brake.

⚠ WARNING

- **Whenever parking, make sure the gearshift lever for manual transmission vehicles is in 1st gear or “R” (Reverse) and the gearshift lever for automatic transmission or automatic transmission vehicles is in “P” (Park). Remember, even though the transmission is in gear or in Park, you must set the parking brake fully.**
- **When parking on an uphill, turn the steering wheel so that the front wheels point to the center of the road.**
- **When parking on a downhill, turn the steering wheel so that the front wheels point to the curb.**
- **Never drive your vehicle with the parking brake on: rear brake effectiveness can be reduced from overheating, brake life may be shortened, or permanent brake damage may result.**
- **If the parking brake does not hold the vehicle securely or does not fully release, have your vehicle inspected immediately by an authorized SUZUKI dealer or a qualified workshop.**

⚠ WARNING

Always set the parking brake fully before leaving your vehicle or it may move, causing injury or damage. When parking, make sure the gearshift lever for manual transmission vehicles is in 1st gear or “R” (Reverse) and the gearshift lever for automatic transmission vehicles is in “P” (Park). Remember, even though the transmission is in gear or in Park, you must set the parking brake fully.

⚠ WARNING

When parking the vehicle in extremely cold weather, the following procedure should be used:

1) **Set the parking brake.**
2) **Manual transmission – turn off the engine, then shift into reverse or first gear.**
   Automatic transmission – shift into “P” (Park) and turn off the engine.
3) **Get out of the vehicle and put chocks under the wheels.**
4) **Release the parking brake.**
   When you return to your vehicle, first set the parking brake, and then remove the wheel chocks.

⚠ WARNING

Do not leave cigarette lighters, spray cans, soft drink cans or plastic articles (such as glasses, CD case, etc.) in sun-heated vehicle. The temperature inside the vehicle may cause as follows:

- **Gas may leak from a cigarette lighter or spray can and may lead to a fire.**
- **The glasses, plastic cards or CD cases, etc. may deform or crack.**
- **Soft drink cans may fracture.**

Parking brake reminder buzzer

A buzzer sounds intermittently to remind you to release the parking brake if you start the vehicle without fully releasing the parking brake. Check that the parking brake is fully released and the brake system warning light turns off.

Pedal

Automatic transmission

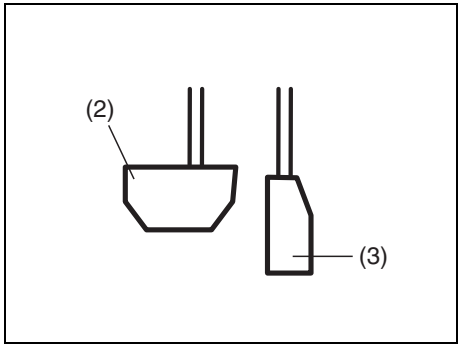

80J2122

Brake pedal (2)

Your vehicle is equipped with either front and rear disc brakes or front disc brakes and rear drum brakes. Depressing a brake pedal applies both sets of brakes.

You may hear occasional brake squeal when you apply the brakes. This is a normal condition caused by environmental factors such as temperature, humidity or dust, etc.

⚠ WARNING

If brake squeal is excessive and occurs each time the brakes are applied, you should have the brakes checked by an authorized SUZUKI dealer or a qualified workshop.

⚠ WARNING

Do not apply brakes continuously or rest your foot on the brake pedal. This will result in overheating of the brakes which could cause unpredictable braking action, longer stopping distances, or permanent brake damage.

Accelerator pedal (3)

An accelerator pedal controls the speed of the engine. Depressing the accelerator pedal increases power output and speed.

NOTE:
Your vehicle is equipped with Brake Override System. If you depress both the accelerator pedal and the brake pedal simultaneously, the engine power output may be suppressed.

Keyless push start system (if equipped)

Provided the keyless push start system remote controller is within the interior workable area, you can use the engine switch for starting the engine and selecting an ignition mode (ACC or ON). In addition, the following functions can be used:

- Keyless entry function. Refer to “Keyless push start system remote controller” in “BEFORE DRIVING” section for details.
- Locking and unlocking doors (including the tailgate) using a request switch. Refer to “Keyless push start system remote controller” in “BEFORE DRIVING” section for details.
- Immobilizer (anti-theft) function. Refer to “Immobilizer system” in “BEFORE DRIVING” section for details.

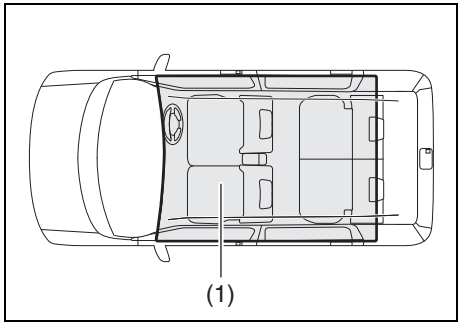

82K254

(1) Interior workable area

The interior workable area is defined as all the interior spaces except for the space on the instrument panel or in the luggage compartment.

NOTE:

- *Even when the remote controller is in the interior workable area, if it is in any of the following conditions, you may not be able to start the engine or select the ignition modes, and the remote controller outside warning may be given.*
  - *–The remote controller’s battery is low.*
  - *–The remote controller is affected by strong radio wave or noise.*
  - *–The remote controller is in contact with or covered by a metallic object.*
  - *–The remote controller is in the secluded stowages such as the glove box or a door pocket.*
  - *–The remote controller is in the sun visor pocket or on the floor.*
- *Even when the remote controller is outside the interior workable area, if it is in any of the following conditions, you may be able to start the engine or select the ignition mode. The remote controller outside warning may not be given at that time.*
  - *–The remote controller is outside the vehicle but very close to a door.*
  - *–The remote controller is on the instrument panel.*

Engine switch illumination

The engine switch is illuminated (lit) in the following situations:

- When the engine is off and the driver's door is open, or for 15 seconds after the driver's door is closed. The illumination will fade out after 15 seconds passed.
- While the headlights and/or the position lights are on, the illumination will turn on. The illumination will go out when the headlights and the position lights are turned off.

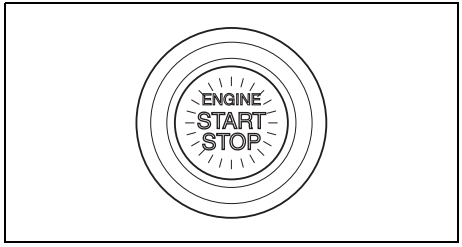

82K253

NOTE:
To save the lead-acid battery, the illumination will be automatically turned off when both of the following conditions are simultaneously met:

- *The headlights and the position lights are turned off.*
- *15 minutes has elapsed since opening the driver's door.*

Selection of ignition modes

Press the engine switch to select ACC or ON mode as follows when you use an electric accessory or check the operation of instrument cluster without running the engine.

NOTE:
When selecting the ignition modes, the information display in the instrument cluster show certain messages. Refer to "Information display" in the "BEFORE DRIVING" section.

1) Bring the keyless push start system remote controller with you and sit in the driver's seat.

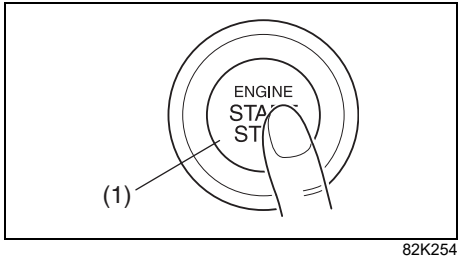

82K254

2) Without depressing the brake pedal, press the engine switch (1).

Every time you press the engine switch, the ignition mode changes as follows.

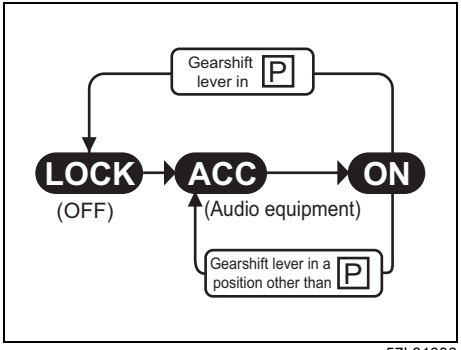

57L31006

If the master warning indicator light ⚠ blinks and the ignition modes cannot be selected

Your keyless push start system remote controller may not be sensed as being within the interior workable area (refer to the related explanation in this section). Try again after checking that you have the remote controller with you. If the ignition modes still cannot be selected, the battery of the remote controller may be discharged. To select an ignition mode, you must then use the following method:

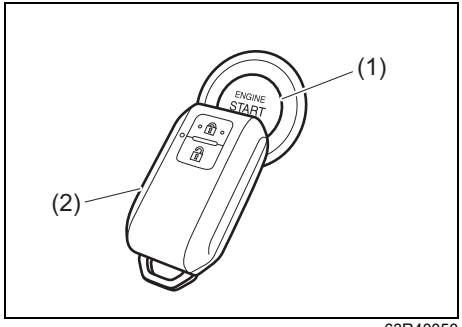

63R40050

1) Without depressing the brake pedal, press the engine switch (1).

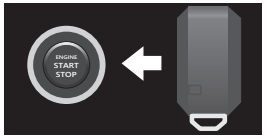

69T040160

"PLACE KEY
FOB ON
START SWITCH"

2) Within about 10 seconds while the master warning indicator light blinks and the information display in the instrument cluster shows the following message, touch the engine switch with the lock switch end of the remote controller (2) for about 2 seconds.

While the master warning indicator light blinks, the immobilizer/keyless push system warning light will come on for about 5 seconds.

If you still cannot select the ignition modes, there may be the other problem such as the discharged lead-acid battery. In this case, consult an authorized SUZUKI dealer or a qualified workshop.

NOTE:

- *You may customize the system to cause the interior buzzer to sound once for warning that remote controller is out of sensing range. For this customization, consult an authorized SUZUKI dealer or a qualified workshop.*
- *If the battery of the remote controller is almost discharged, the information display in the instrument cluster shows the following message when you press the engine switch to change the ignition mode to ON. Refer to "Information display" in "BEFORE DRIVING" section for details. For details on replacing the battery, refer to "Keyless push start system remote controller" in "BEFORE DRIVING" section.*

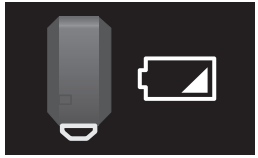

69T040210

"KEY FOB
LOW
BATTERY"

Remote controller outside warning

When either of the following conditions is met, the system causes the remote controller outside warning by sounding the interior and exterior buzzers. At the same time, the immobilizer/keyless push start system warning light comes on, the master warning indicator light blinks and the information display in the instrument cluster will show the corresponding message.

- Any door is opened and then closed while the remote controller is not inside the vehicle and the engine is running or the ignition mode has been changed to ACC or ON by pressing the engine switch.
- The remote controller is not inside the vehicle when you attempt to start the engine after changing the ignition mode to ACC or ON by pressing the engine switch.

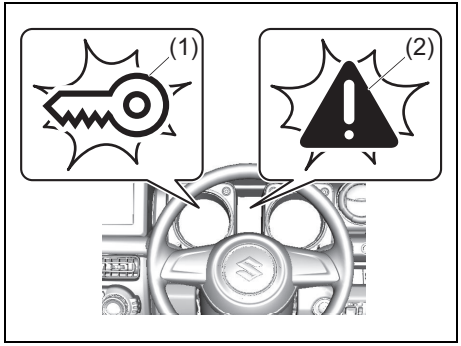

80T050050

(1) Immobilizer/keyless push start system warning light (blinks)
(2) Master warning indicator light (blinks)

If the warning is given, place the remote controller inside the vehicle as soon as possible.

- Any attempt to start the engine will fail while the warning is active. The message appearing in the information display in the instrument cluster will also indicate this condition. Refer to “Information display” in “BEFORE DRIVING” section for details.
- Normally, the immobilizer/keyless push start system warning light should go out and the master warning indicator light should stop blinking shortly after the remote controller is brought back inside the vehicle. If they remain lit and blinking, change the ignition mode to LOCK (OFF) by pressing the engine switch and then perform the engine starting operation. Refer to “Starting / stopping engine (Vehicle with keyless push start system)” in this section.

NOTE:
Always keep the remote controller with you as the driver.

Starting / stopping engine (Vehicle without keyless push start system)

Starting engine

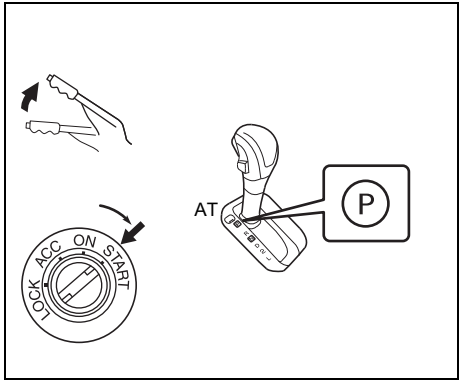

78RB03001

1) Check that the parking brake is set fully.
2) Turn off such loads as the headlights and air conditioning system to facilitate starting of the engine.
3) Automatic transmission vehicles: If the gearshift lever is not in "P" (Park) position, shift into "P" (Park). Hold the brake pedal fully depressed.
4) With your foot taken off the accelerator pedal, crank the engine by turning the ignition key to "START". Release the key immediately after the engine has started.

NOTICE

- **For protection of a lead-acid battery and a starter motor, do not use the starter motor by turning the key to "START" for more than 12 seconds at a time. If the engine does not start, turn the key to "LOCK" position and wait for more than 30 seconds before trying again. If the engine does not start after several attempts, consult an authorized SUZUKI dealer or a qualified workshop.**
- **Automatic transmission vehicles: In case that you need to restart the engine while the vehicle is moving, shift into "N". Otherwise the engine and transmission can be damaged.**

(Continued)

NOTICE

(Continued)

- **Do not try to start the engine by pushing or towing the vehicle, or coasting down a hill. This starting method could result in damage to the catalytic converter or damage to other parts.**

NOTE:
Automatic transmission vehicles: Automatic transmission vehicles have a starter interlock device. The engine starts when the gearshift lever is in either "P" or "N" position.

Stopping engine

⚠ WARNING

Except in cases of emergency, do not stop the engine while the vehicle is in motion. If you stop the engine while the vehicle is in motion, the steering wheel will lock and you will not be able to steer the vehicle. This may result in an accident. Avoid stopping the engine while driving.

NOTICE

Automatic transmission vehicles: If you stop the engine while the vehicle is in motion, the automatic transmission may be damaged. Avoid stopping the engine while driving.

Starting / stopping engine (Vehicle with keyless push start system)

Starting Engine

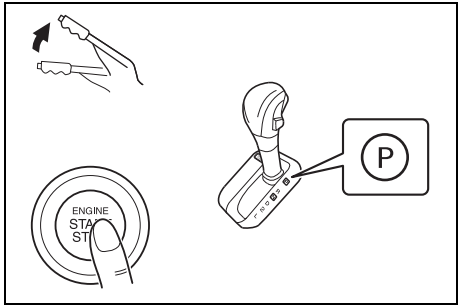

85U030040

1) Check that the parking brake is set fully.
2) Turn off such loads as the headlights and air conditioning system to facilitate starting of the engine.
3) If the gearshift lever is not in “P” (Park) position, shift into “P” (Park). Hold the brake pedal fully depressed.
4) The “PUSH START SWITCH” message will appear in the information display in the instrument cluster.

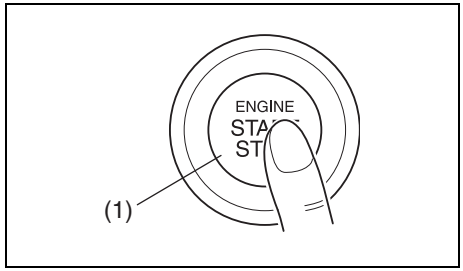

82K254

5) With your foot taken off the accelerator pedal, push the engine switch (1). When the engine is started, the starter motor will automatically stop.
   - Even if you fail to start the engine, the starter motor will stop turning automatically after approximately 12 seconds. In this case, press the engine switch to select LOCK (OFF) mode and restart the engine.
   - If there is a problem with the system, the engine will not start automatically even if the switch is pressed. In case the starter motor does not turn or stops immediately, start the engine by the following procedure.
     a. Press the engine switch to select the ON mode.
     b. Perform the above procedure 1) to 3).
     c. Keep the engine switch pressed until the engine starts. Release your finger from the engine switch after the engine has started.

NOTICE

- **If the engine does not start, press the engine switch to select LOCK (OFF) mode and wait for more than 30 seconds before trying again, for protection of a lead-acid battery and a starter motor. If the engine does not start after several attempts, consult an authorized SUZUKI dealer or a qualified workshop.**
- **Do not try to start the engine by pushing or towing the vehicle, or coasting down a hill. This starting method could result in damage to the catalytic converter or damage to other parts.**

NOTE:

- *You do not need to keep the engine switch pressed to start the engine.*
- *Automatic transmission vehicles have a starter interlock device. The engine starts when the gearshift lever is in either "P" or "N" position.*
- *During the engine starting procedure, messages on the information display will help you. Refer to "Information display" in "BEFORE DRIVING" section for details.*
- *When the engine stalls in intersection and railway crossing etc., restart the engine by usual procedure.*

Stopping engine

- Depress the engine switch to stop the engine after the vehicle stopped completely.
- If the engine remains stopped for a while after it was stopped unexpectedly or was raced before stopping, a clicking sound may be heard from around the engine when it is restarted. This is not a malfunction. Always let the engine idle before stopping it.

⚠ WARNING

Except in cases of emergency, do not stop the engine while the vehicle is in motion.

- **The steering and braking operation will require more effort when the engine is stopped.**
- **The following functions will not operate:**
  - **Anti-lock Brake System (ABS)**
  - **Emergency Stop Signal (ESS)**
  - **Electronic Stability Program (ESP®)**
  - **Dual Sensor Brake Support II (DSBS II)**

NOTICE

Automatic transmission vehicles: If you stop the engine while the vehicle is in motion, the automatic transmission may be damaged. Avoid stopping the engine while driving.

Emergency stop

In case of emergency, you can stop the engine by quickly pushing the engine switch more than 3 times, or pushing and holding the engine switch for more than 2 seconds while the vehicle is in motion.

NOTE:
Except in cases of emergency, do not stop the engine while the vehicle is in motion. The steering and braking operation will require more effort when the engine is stopped. Refer to "Braking" in this section.

If the master warning indicator light ⚠ blinks and the engine cannot be started

Your keyless push start system remote controller may not be sensed as being within the interior workable area (refer to the related explanation in this section). Try again after checking that you have the remote controller with you. If the engine cannot be started, the battery of the remote controller may be discharged. To start the engine, you must then use the following method:

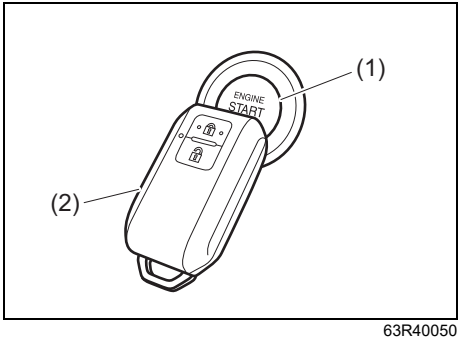

63R40050

1) Check that the gearshift lever is in "P" (Park) position and keep depressing the brake pedal fully.



69T040150

"PUSH
START SWITCH"

2) If the above message is shown on the information display in the instrument cluster, press the engine switch (1).

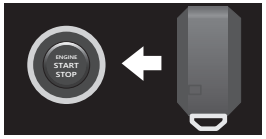

69T040160

"PLACE KEY
FOB ON
START SWITCH"

3) Within about 10 seconds while the master warning indicator light blinks and the information display in the instrument cluster shows the following message, touch the engine switch with the lock switch end of the remote controller (2) for about 2 seconds.

While the master warning indicator light blinks, the immobilizer/keyless push system warning light will come on for about 5 seconds.

If you still cannot start the engine, there may be the other problem such as the discharged lead-acid battery. In this case, consult an authorized SUZUKI dealer or a qualified workshop.

NOTE:

- *You may customize the system to cause the interior buzzer to sound once for warning that remote controller is out of sensing range. For this customization, consult an authorized SUZUKI dealer or a qualified workshop.*
- *If the battery of the remote controller is almost discharged, the information display in the instrument cluster shows the following message when you press the engine switch to change the ignition mode to ON. Refer to "Information display" in "BEFORE DRIVING" section for details. For details on replacing the battery, refer to "Keyless push start system remote controller" in "BEFORE DRIVING" section.*

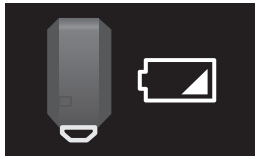

69T040210

"KEY FOB
LOW
BATTERY"

Returning ignition mode to LOCK (OFF)

To ensure safety, the ignition mode can be returned to LOCK (OFF) by pressing the engine switch only when the gearshift lever is placed in “P” position without pressing the knob button.

NOTE:
In the case of an automatic transmission, the ignition mode cannot be returned to LOCK (OFF) position if the gearshift lever is in any other position than “P”.
Certain problems such as a fault in engine system may prevent the engine switch from going back to LOCK (OFF) mode. If this happens, have the vehicle inspected by an authorized SUZUKI dealer or a qualified workshop after doing the following:

- *Lock the doors using the key to prevent theft. (The request switches and the keyless push start system remote controller cannot be used to lock them.)*
- *Disconnect the negative cable from the lead-acid battery to prevent discharge.*

LOCK (OFF) mode reminder buzzer
If the driver’s door is opened without returning the ignition mode to LOCK (OFF) by pressing the engine switch, a buzzer sounds to warn you of this condition.

- If you open the driver’s door after pressing the engine switch to change the ignition mode to ACC, the interior buzzer beeps intermittently.
- The buzzer will stop sounding if you then push the engine switch twice, thus bringing it back the ignition mode to LOCK (OFF).

NOTE:
Whenever you leave the vehicle, check that you have returned the ignition mode to LOCK (OFF) using the engine switch and then lock the doors. Without returning the ignition mode to LOCK (OFF), you cannot use a request switch or keyless push start system remote controller to lock the doors.

Steering lock warning buzzer
If the steering lock fails to engage due to a fault in the system when the ignition mode is turned to LOCK (OFF) by pressing the engine switch and any door (including the tailgate) is opened or closed, the interior buzzer will warn you of this condition with repeated short beeps. If this happens, have the vehicle inspected by an authorized SUZUKI dealer or a qualified workshop.

Gasoline Particulate Filter (GPF) (if equipped)

The GPF filters off the soot particles in the exhaust gas, so the GPF could get clogged depending on the driving condition. The GPF is cleaned by the regenerating function that combusts the soot particles in the GPF by raising the exhaust gas temperature during driving.

⚠ CAUTION

Frequent short distance driving that prevents the exhaust gas temperature from rising sufficiently can cause soot to accumulate in the GPF. To remove the soot accumulated in the GPF, please drive regularly at a speed of 60 km/h or higher for a continuous period of at least 20 minutes.

Gasoline Particulate Filter (GPF) warning light

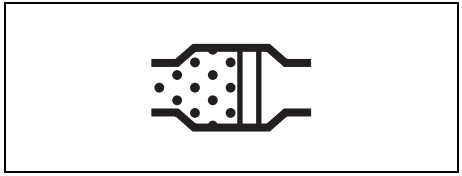

64J244

If the GPF warning light comes on when driving, the GPF is nearly clogged. You should regenerate the GPF when the GPF warning light comes on. To go out the warning light, the vehicle must stay in motion until regeneration has been completed.
The process normally takes at least 20 minutes.
The optimum condition to end the process is achieved by keeping the vehicle in motion at a speed of 60 km/h (37 mph) or higher.
However, you should drive carefully and within the legal speed limit, and should take in to consideration the surrounding traffic condition.
If you drive your vehicle until the light goes out, the regeneration of the GPF will be completed.

NOTICE

Be sure to regenerate the GPF when the GPF warning light comes on. Failure to regenerate the GPF will cause a vehicle malfunction due to the clogged filter.

Idling stop system (if equipped)

The idling stop system automatically stops the engine while waiting briefly at a traffic light, etc., and automatically restarts the engine afterward. This system helps reduce emissions, improve fuel consumption and lower engine noise.

This system stops the engine temporarily under specific conditions. Before parking the vehicle for an extended period of time or leaving the vehicle, properly apply the parking brake and stop the engine with the engine switch.

Once the specific conditions are met, the engine will stop automatically after the vehicle has stopped. However, the engine will not be stopped automatically until confirmation of the system function is finished.

NOTE:
If your vehicle is equipped with automatic heating and air conditioning system, you can change the automatic engine stop condition via the information display. Refer to “Information display” in “BEFORE DRIVING” section.

⚠ WARNING

- **Do not get out of the vehicle while the engine is automatically stopped by the idling stop system. Doing so may lead to an accident.**
- **If the engine does not restart automatically after having been stopped automatically by the idling stop system, push the engine switch to start the engine. Trying to move the vehicle when the engine has not yet restarted requires a strong force to turn the steering wheel or depress the brake pedal, potentially leading to an accident.**

NOTICE

The vehicle equipped with this system uses a dedicated high-performance battery that supports idling stop system. Accordingly, observe the instructions listed below. If these instructions are not observed, the system may not actuate properly or the battery may die prematurely.

- **When replacing the battery, use a SUZUKI genuine battery specified in the Specification.**
- **Do not draw power from the battery terminals for electrical products.**

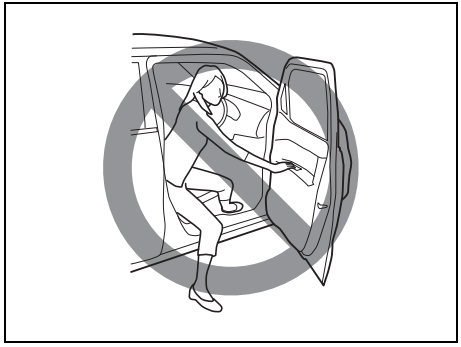

72M2042

NOTE:
If the driver's seat belt is unfastened, even if the brake pedal is pressed down, or the driver's door is opened, the engine will be restarted to warn you that the engine was stopped automatically by the idling stop system.

Automatic stopping / restarting of the engine

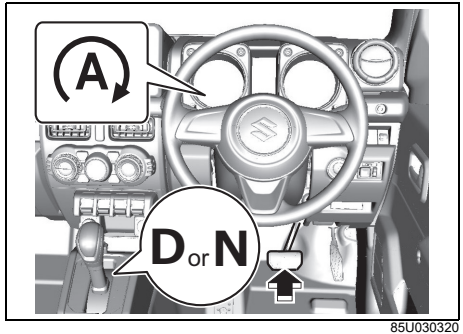

85U030320

1) The engine will stop automatically if you stop the vehicle by depressing the brake pedal with the gearshift lever is in the "D" or "N" position. After the engine is stopped automatically, the idling stop system indicator light (green) will come on.
   - The idling stop system will not stop the engine automatically if all the automatic engine stop conditions are not met. For details, refer to "Conditions to restart the engine automatically" in this section.
   - During the automatic engine stop, the engine may shut down, accompanied by an interior buzzer or restarted, to ensure safety.

NOTE:
- *The engine is not stopped automatically when decelerating without depressing the brake pedal, for example, by using engine braking.*
- *Electrical components, such as the audio system, can be used while the engine has been stopped automatically, however, the air conditioner switches to the ventilation position.*
- *For the automatic heating and air conditioning system, airflow is limited (only under automatic operation) when the engine is stopped automatically, in order to improve the cooling and heating performance.*

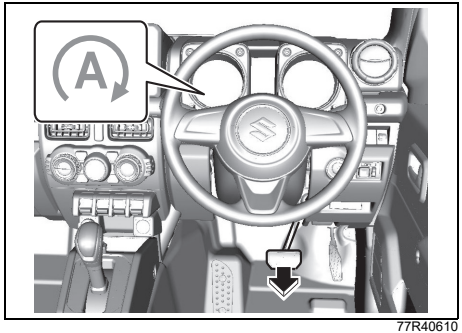

77R40610

2) When you remove your foot from the brake pedal, the engine is restarted and the idling stop system indicator light (green) goes off.
   - The engine is restarted automatically if the conditions to restart the engine automatically are met, even if the brake pedal is depressed. For details on the conditions for automatically restarting the engine, refer to “Conditions to restart the engine automatically” in this section.
   - When restarting the engine, you can prevent the vehicle from creeping ahead and rolling downward on an uphill slope, by keeping force on the brake pedal temporarily.

NOTE:
- *The hill hold control system is activated when the engine is restarted automatically.*
- *If a sound of audio system is loud, the sound may be interrupted when the engine is restarted. This is not a malfunction.*

Precautions of when the engine is stopped automatically

⚠ WARNING

Do not perform any of the following operations while the engine has been stopped automatically. This may result in an accident.

Operation/Vehicle Condition	Solution
Engine hood opened • The interior buzzer sounds continuous beep. • After the engine is stopped automatically, it stalls. • The idling stop system indicator light (green) goes off.	To restart the engine, follow the procedure below. 1) Set the parking brake firmly, and then place the gearshift lever in the “P” position. 2) Securely close the engine hood. 3) Press the engine switch to restart the engine.

Operation/Vehicle Condition	Solution
Driver's seat belt unfastened, or driver's door opened • The interior buzzer sounds continuous beep. • The engine is restarted automatically. • The idling stop system indicator light (green) blinks 5 times, then goes off.	Before starting the vehicle, close the door and buckle the seat belt. In addition, before getting out of the vehicle, follow the procedure below. 1) Set the parking brake firmly, and then place the gearshift lever in the "P" position. 2) When the vehicle will be stopped for a long time or when you will leave the vehicle unattended, press the engine switch to stop the engine.

NOTE:
The following indicator lights in the instrument cluster do not come on when the engine is stopped automatically.
- *Malfunction indicator light, electric power steering light, oil pressure light, charging light*

Operating conditions of idling stop system

Standby conditions
If all of the following conditions are met while driving, the automatic engine stop will be permitted.

When the engine is started*

- The engine is started with the engine hood securely closed.

*: If all of the following conditions, the idling stop system indicator light (green) in the instrument cluster will illuminate when the vehicle is stopped and the engine will stop automatically.

When driving

- The idling stop system is not deactivated (OFF) (For details, refer to “Idling stop system OFF switch” in this section.)
- The battery is charged more than a certain amount, and the temperature inside the battery is within the specified range (#1)
- The engine coolant temperature is within the specified range
- The driver’s seat belt is fastened
- The driver’s door is securely closed
- The engine hood is securely closed
- There is no signal to prevent stopping the engine from any electronic control systems other than the idling stop system (#2)
- The transfer lever is in “2H” position
- The gearshift lever is in the “D” or “N” position.
- The overdrive OFF switch light goes off.
- The manual mode is not in use.
- There is no signal to prevent stopping the engine from any electronic control systems other than the idling stop system.

<Automatic heating and air conditioning system>
- The air from the outlets is sufficiently cooled while cooling or sufficiently warmed while heating.
- The defroster is turned off.

#1: If the battery is discharged, for example, if the vehicle has not been used for a long time or electrical components, such as the audio system, have been used for a long time while the engine was stopped, it may take some time until the system can be in standby.

#2: If any of the warning and indicator lights affecting the idling stop system come on, the engine will not be stopped automatically.

Conditions to stop the engine automatically
If all of the following conditions, the idling stop system indicator light (green) in the instrument cluster will illuminate when the vehicle is stopped and the engine will stop automatically.

- The ABS or ESP® system has not been activated
- Brake booster vacuum pressure is normal
- The brake pedal is sufficiently depressed (#1)
- The accelerator pedal is not depressed
- The vehicle is not stopped on a steep hill

#1:The engine may not be stopped automatically if the brake pedal was depressed lightly or strongly.
The engine may not stop automatically when the brake pedal is depressed lightly. In this case, when the brake pedal is depressed additionally, the engine may stop automatically.
The driver can operate whether the engine stops automatically or not depending on how hard the brake pedal is pressed.

Conditions to restart the engine automatically
If any of the following vehicle conditions occur or operations are performed while the engine is stopped automatically, the engine is restarted automatically and the idling stop system indicator light (green) goes off.

- The idling stop system is deactivated (OFF)
- The battery continues to be discharged
- A malfunction was detected in this system
- The negative pressure of the brake booster has dropped
- The vehicle starts to move on a slope, etc.
- Some time (2 minutes or so) has elapsed after the start of the automatic engine stop
- Shift the transfer lever into “4H” or “4L” position
- The driver releases the seat belt (#1)
- The driver’s door is opened (#1)
- The foot is removed from the brake pedal (#2)
- The accelerator pedal is depressed
- The gearshift lever is placed in the “P”, “R”, “L” or “2” position, or push the overdrive off switch and release the overdrive
- After the gearshift lever is placed in the “N” position, it is returned to the “D” position

<Automatic heating and air conditioning system>
- The temperature of the air from the air conditioner outlets changes greatly after the automatic engine stop, or the cooling and heating performance is insufficient
- The temperature selector was greatly set toward COOL while cooling or greatly set toward HOT while heating
- The defroster is turned on

#1:The interior buzzer sounds continuous beep.
#2:If the brake pedal is not fully depressed, the engine may be restarted automatically. The engine may not be stopped automatically when the brake pedal is depressed lightly, but the engine is stopped automatically by further depressing the brake pedal. The driver can operate whether idling stop is performed or not depending on how much the brake pedal is depressed.

Idling stop system OFF switch

The idling stop system can be deactivated.

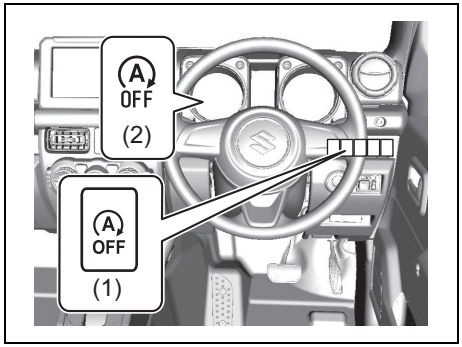

77R40620

- To deactivate the system, press the idling stop system OFF switch (1) to turn on idling stop system OFF indicator light (2).
- To activate the system once again, press the switch (1) again to turn off the indicator.
- Every time the engine is stopped manually, the system is enabled again and the idling stop system OFF light (2) goes off.

NOTE:
Pressing the idling stop system OFF switch (1) during the automatic engine stop will restart the engine automatically and the idling stop system *OFF indicator light (2) will come on.*

Idling stop system OFF indicator light

- When you push the Idling stop OFF switch, this light comes on.



56RM03012

- The idling stop system OFF indicator light (yellow) in the speedometer comes on or blinks in the following cases as well, and not only to warn you that the idling stop system is deactivated. If it blinks, have the vehicle serviced by an authorized SUZUKI dealer or a qualified workshop.
  – If the system is operating normally when the engine switch is pressed to change the ignition mode to ON, the indicator light comes on for approximately 2 seconds, then goes off.
  – If there is something wrong with the system, or if it is time to replace the engine component (starter motor) or the lead-acid battery, the indicator light will blink when the engine switch is pressed to change the ignition mode to ON. (The idling stop system will not work properly.)

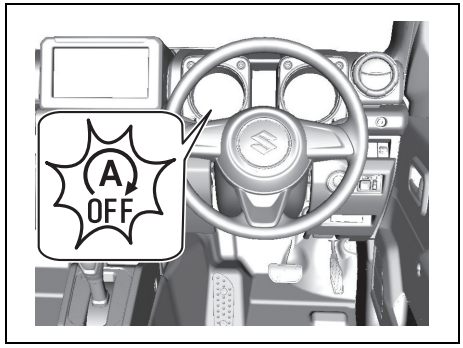

77R40630

NOTE:
If the indicator light blinks when the engine has stopped automatically by the idling stop system, the engine may restart or stall.

Air conditioning system settings by idling stop system (if equipped)

When using the automatic heating and air conditioning system while the engine is stopped automatically by the idling stop system, you can select the settings via the setting mode of the information display.
For details on how to use the information display, refer to “Setting mode” of “Information display” in “BEFORE DRIVING” section.

Using transmission

⚠ WARNING

Do not hang any items on the gearshift lever and do not use the gearshift lever as a handrest. Otherwise, it could prevent proper operation of the gearshift lever and cause its malfunction, resulting in an accident.

Automatic transmission (AT)

Gearshift lever

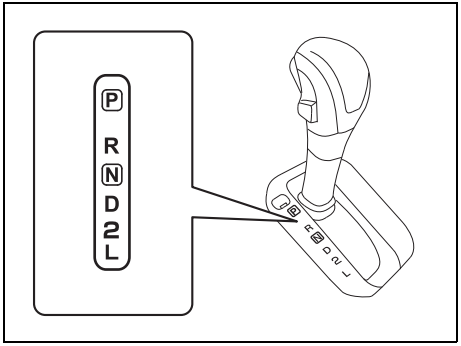

78RB03003

The gearshift lever is designed so that it cannot be shifted out of “P” position unless the ignition switch is in “ON” position or the ignition mode to ON and the brake pedal is depressed.

Use the gearshift lever positions as follows:

P (Park)
Use this position to lock the transmission when the vehicle is parked or when starting the engine. Shift into Park only when the vehicle is completely stationary.

R (Reverse)
Use this position to reverse the vehicle from stop. Make sure that vehicle is completely stationary before shifting into Reverse.

N (Neutral)
Use this position for starting the engine if the engine stalls and you need to restart it while the vehicle is moving. You may also shift into Neutral and depress the brake pedal to hold the vehicle stationary during idling.

D (Drive)
Use this position for all normal driving.

With the gearshift lever in "D" range you can get an automatic downshift by pressing the accelerator pedal. The higher the vehicle speed is, the more you need to press the accelerator pedal to get a downshift.

2 (Low 2)
Use this position to provide extra power when climbing hills, or to provide engine braking when going down hills.

L (Low 1)
Use this position to provide maximum power when climbing steep hills or driving through deep snow or mud, or to provide maximum engine braking when going down steep hills.

⚠ WARNING

Always depress the brake pedal before shifting from "P" (Park) (or "N" (Neutral) if the vehicle is stationary) to a forward or reverse gear, to help prevent the vehicle from moving unexpectedly when you shift.

⚠ CAUTION

For the vehicles with the keyless push start system, if you cannot press the engine switch firmly, the engine may not start.
Even if you shift the gearshift lever into "R" or "D" position without the engine running, the vehicle does not move.
If you try to move your vehicle under the above-mentioned condition, the vehicle may move in unexpected directions on a slope, etc. This may cause an accident. When starting the engine, press the engine switch firmly. Also, make sure that the engine is running by checking engine sound or warning and indicator lights.

NOTE:
When you shift the gearshift lever into "P" and stop the engine before depressing the parking brake pedal, if you try to restart the engine and shift the gearshift lever into the position other than "P", it may reduce gearshift lever capability, or unusual sound and shock may occur. However, this is not abnormal.

The gearshift lever has a lock mechanism to help prevent accidental shifting. Shift the gearshift lever as follows:

Except for Hong Kong, Macao and Singapore

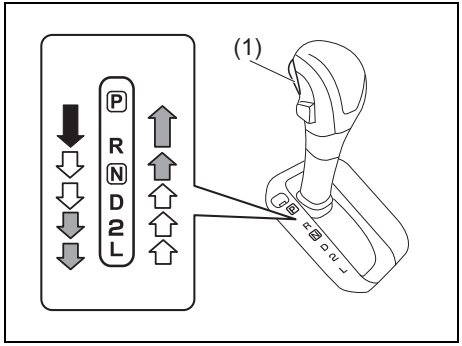

78RB03004

For Hong Kong, Macao and Singapore

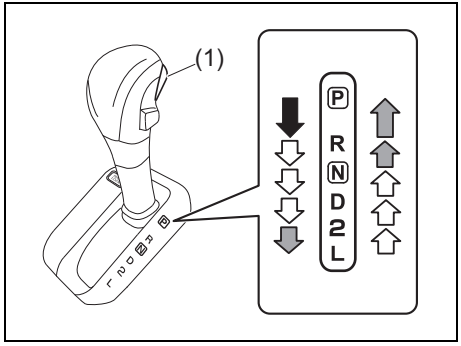

80T050090

(1) knob button

⬇	Shift with the knob button (1) pushed in and the brake pedal depressed.
⇧⇩	Shift with the knob button (1) pushed in.
⇧⇩	Shift without the knob button (1) pushed in.

NOTICE

- **Do not shift the gearshift lever into "R" while moving forward, or the transmission may be damaged. If you shift into "R" when the vehicle speed is over 10 km/h (6 mph), the transmission will not shift into reverse.**
- **Be sure to take the following precautions to help avoid damage to the automatic transmission:**
  - **Make sure that the vehicle is completely stationary before shifting into "P" or "R".**
  - **Do not shift from "P" or "N" to "R", "D" or "L" when the engine is running above idle speed.**
  - **Do not rev the engine with the transmission in a drive position ("R", "D" or "L") and the front wheels not moving.**
  - **Do not use the accelerator to hold the vehicle on a hill. Use the vehicle's brakes.**
- **If you spill a drink on the moving part of gearshift lever or foreign materials enter into it and you keep using the gearshift lever, the shift lock system may not operate properly. Consult an authorized SUZUKI dealer or a qualified workshop as soon as possible.**

NOTE:
- *Always shift the gearshift lever without pushing in the knob button except when you shift from "P" to "R", from "D" to "2", from "2" to "L", from "N" to "R" or from "R" to "P". If you always push in the knob button when shifting the gearshift lever, you could shift into "P", "R", "2" or "L" by mistake.*
- *If driver's or passenger's knee hits the gearshift lever while driving, the lever could move and the gear could be changed unexpectedly.*

Overdrive off switch

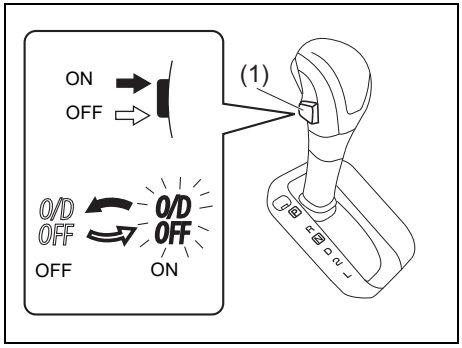

78RB03046

(1) Overdrive off switch

The transmission is a 4-speed (3-speed plus overdrive) automatic transmission. By operating the overdrive off switch, the transmission can be converted to a 3-speed automatic transmission that will not move to the overdrive position. To convert the transmission to the 3-speed mode, push in the overdrive off switch and release it.

To return the transmission to the 4-speed mode, push in the overdrive off switch again.

When the ignition switch is turned to the "ACC" position or change the ignition mode to ACC, the transmission in the 3-speed mode is converted to the 4-speed mode automatically.
The 3-speed mode is suitable for the following driving conditions:
- Driving on hilly, winding roads
  - You can drive more smoothly with less frequent gear changing
- Going down a steep hill
  - Some engine braking is provided

If you cannot shift automatic transmission gearshift lever out of "P" (PARK)

Left hand drive vehicle

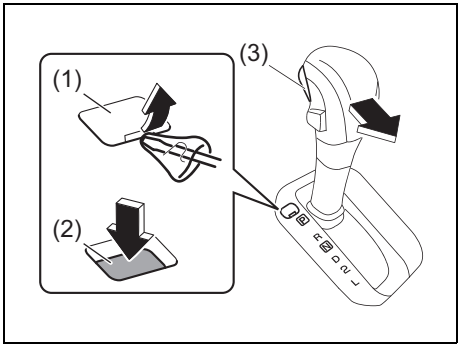

78RB03056

The automatic transmission vehicles have an electrically operated park-lock feature. If the vehicle's lead-acid battery is discharged, or there is some other electrical failure, the automatic transmission cannot be shifted out of Park in the normal way. Jump starting may correct the condition. If not, follow the procedure described below. This procedure will permit shifting the transmission out of Park.

1) Be sure the parking brake is firmly applied.
2) If the engine is running, stop the engine.
3) Make sure the key is in “ON” or “ACC” position or the ignition mode is ON or ACC.
4) Remove the cover (1) by using a flat-bladed screwdriver covered with a soft cloth as shown.
5) With the release button (2) pushed by the key or the flat end rod, push the knob button (3) and shift the gearshift lever to the desired position.

This procedure is for emergency use only. If repeated use of this procedure is necessary, or the procedure does not work as described, take your vehicle to an authorized SUZUKI dealer or a qualified workshop for repair.

Right hand drive vehicle

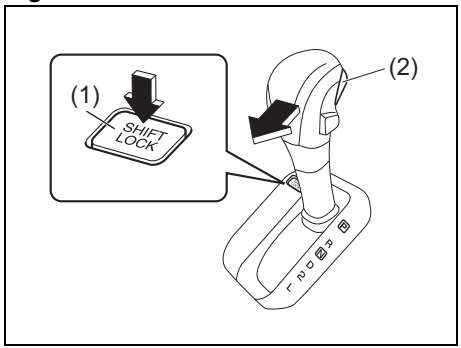

78RB03006

The automatic transmission vehicles have an electrically operated parklock feature. If the vehicle’s lead-acid battery is discharged, or there is some other electrical failure, the automatic transmission cannot be shifted out of Park in the normal way. Jump starting may correct the condition. If not, follow the procedure described below. This procedure will permit shifting the transmission out of Park.

1) Be sure the parking brake is firmly applied.
2) If the engine is running, stop the engine.
3) Make sure the key is in “ON” or “ACC” position or the ignition mode is ON or ACC.
4) With the release button (1) pushed, push the knob button (2) and shift the gearshift lever to the desired position.

This procedure is for emergency use only. If repeated use of this procedure is necessary, or the procedure does not work as described, take the vehicle to an authorized SUZUKI dealer or a qualified workshop for repair.

When driving the vehicle with Automatic Transmission (AT) (if equipped)

Transmission warning light

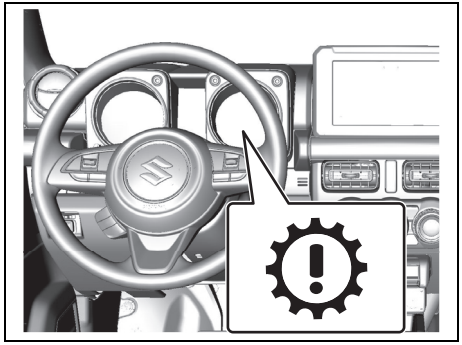

85U030300

The transmission warning light is located in the instrument cluster.

- If there is a problem with the automatic transmission, this light may light up with the ignition switch in “ON” position or the ignition mode to ON. If the transmission warning light lights up, stop driving immediately and consult a SUZUKI dealer or a qualified workshop.

Warning buzzer of “R” (Reverse) position (For Hong Kong, Macao and Singapore)

The warning buzzer will sound when you shift into “R” (Reverse) position to notify the driver that the gearshift lever is in “R” position.

NOTE:
This warning buzzer is not used for notifying the vehicle's reverse to persons outside the vehicle.

Be careful not to depress the wrong pedal

To prevent mistakes in pedal operation, touch the accelerator pedal and the brake pedal with your foot to double-check their positions before starting the engine.

⚠ WARNING

Mistaking the accelerator pedal for the brake pedal, or vice-versa, could cause accidents.
Be careful not to depress the wrong pedal.

Depress the brake pedal with right foot

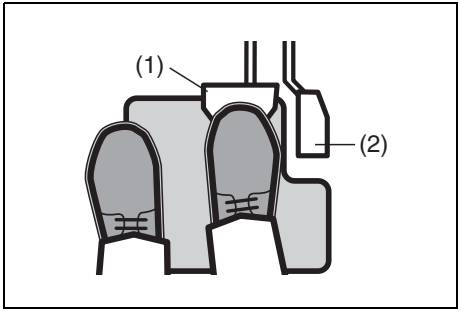

64L20140

(1) Brake pedal
(2) Accelerator pedal

Proper braking operation cannot be performed with your left foot. Ensure that you are in the habit of depressing the brake pedal with only your right foot.

When operating the gearshift lever

- When repeating to drive the vehicle back and forth, you may forget that the gearshift lever is in “R”. Shortly after reversing the vehicle, shift the gearshift lever from “R” to “N”.
- When repeating to move the vehicle back and forth for change of direction, stop the vehicle completely and then operate the gearshift lever.

⚠ WARNING

Operating the gearshift lever with the accelerator pedal depressed could cause the vehicle to suddenly start moving and lead to an accident.
Never operate the gearshift lever with the accelerator pedal depressed.

Visually check the position of gearshift lever

Visually check the position of gearshift lever as follows:

- For starting or exiting the vehicle, the gearshift lever should be in “P”.
- For driving the vehicle forward, the gearshift lever should be in “D”.
- For driving the vehicle in reverse, the gearshift lever should be in “R”.

When leaving the vehicle

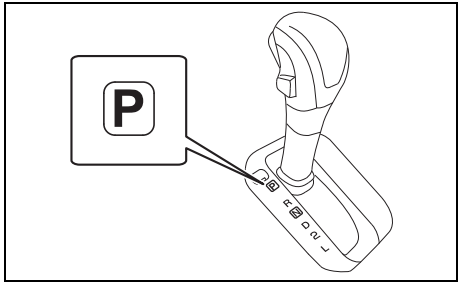

85U030310

⚠ WARNING

Never leave the vehicle unattended with the engine on. If the gearshift lever is in the other position than “P”, there is the danger that the vehicle could move by itself. In addition, when getting into the vehicle, be sure not to accidentally move the gearshift lever or depress the accelerator pedal. Otherwise, the vehicle could unexpectedly move.

Characteristics of the vehicle with Automatic Transmission (AT) (if equipped)

Automatic transmission vehicles do not require manual clutch operation, as they control clutch operation electronically to make driving easier. However, there are special functions and operational precautions, specific to these vehicles.

Be careful of creeping function

When the vehicle is stopped but still running with the gearshift lever in any position other than “P” or “N”, the vehicle moves slowly without the accelerator pedal depressed. This is known as the creeping function.

NOTE:

- *When placing the gearshift lever in any position other than “P” or “N”, be sure to depress the brake pedal firmly.*
- *The creeping function may activate strongly immediately after starting the engine or when operating the air conditioner. Make sure to depress the brake pedal firmly.*

Kickdown

When fully depressing the accelerator pedal while driving (excluding at a low vehicle speed), the transmission automatically shifts down and engine speed increases, enabling strong acceleration. This is called as kickdown.
When you want to accelerate to pass another vehicle, etc., depress the accelerator pedal all the way down. Doing so engages kickdown and provides powerful acceleration.

⚠ CAUTION

When depressing the accelerator pedal all the way down, there is the risk of unexpected rapid acceleration, due to kickdown.
To accelerate normally, slowly depress the accelerator pedal.

Shifting control on an uphill slope

The shifting control on an uphill slope operates when the gearshift lever is in “D”.

- When this shifting control judges that you drive the vehicle on an uphill slope, the gear will shift down, keep the high engine revolutions and lead to smooth driving by a few operations of accelerator pedal.

How to drive the vehicle with Automatic Transmission (AT) (if equipped)

For proper operation, refer to “Using the transmission” in this section.

Sitting on the driver’s seat

1) Adjust the seat position at which you can steadily depress the pedals and easily handle the steering wheel.

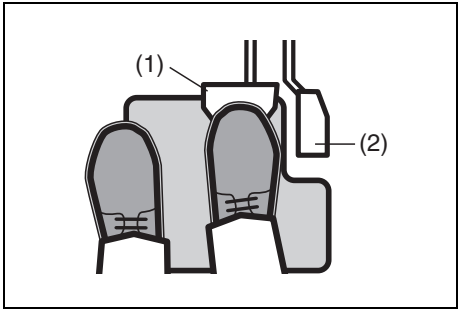

64L20140

2) Check the position of the brake pedal (1) and the accelerator pedal (2) with your right foot.
3) Check the position of the parking brake lever.

Starting the engine

For details on how to start the engine, refer to “Starting / stopping engine (Vehicle without keyless push start system)” or “Starting / stopping engine (Vehicle with keyless push start system)” in this section.

1) Make sure that the parking brake is firmly applied.

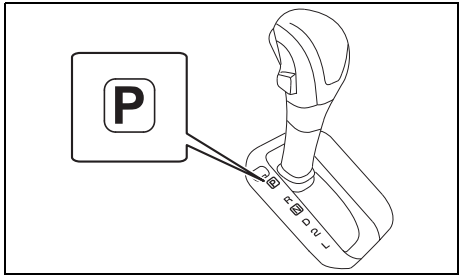

85U030310

2) Check that the gearshift lever to “P” (Park) position.

NOTE:
Even when the gearshift lever is in “N”, you can start the engine. However, start the engine with the gearshift lever in “P” for safety.

3) Depress the brake pedal with your right foot.
4) Start the engine.

Starting the vehicle

Normal starting

1) Depress the brake pedal firmly with your right foot.
2) Shift the gearshift lever in “D” for moving forward or “R” for moving in reverse. Visually check the position of the gearshift lever.
3) Release the parking brake and check that the brake warning light on the instrument cluster turns off.
4) Release your right foot from the brake pedal slowly. Depress the accelerator pedal slowly and carefully for smooth starting.

Starting on a steep uphill slope

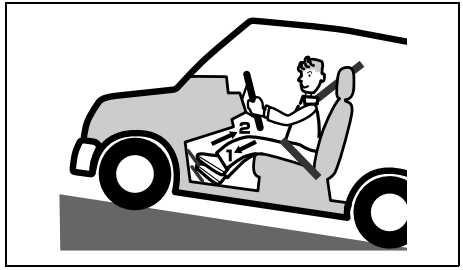

82K202

Perform step 1) and 2) of “Normal starting”.

3) With the brake pedal depressed, securely apply the parking brake lever.
4) Release your right foot from the brake pedal slowly. Depress the accelerator pedal slowly and carefully.
5) By checking the feeling that the vehicle starts to move, release the parking brake lever for starting the vehicle.

NOTE:
For the vehicles with the hill hold control system, there is the function which prevents the vehicle from rolling downward for a while when starting the vehicle on a steep uphill slope.

Driving the vehicle

Normal driving
When the gearshift lever is shifted into “D” and the vehicle is driven, the gear will be shifted automatically according to the vehicle speed and how far the accelerator pedal is depressed.

⚠ WARNING

If you shift the gearshift lever into “N” while driving, engine braking does not function in this gear position and an accident could occur. Except in times of emergency, do not shift the gearshift lever into “N” while driving.

Rapid acceleration driving
When you want to accelerate to pass another vehicle, etc., depress the accelerator pedal all the way down. Doing so engages kickdown and provides powerful acceleration.

Driving on an uphill slope
When depressing the accelerator pedal to maintain speed while driving on an uphill slope in “D”, the engine rotation speed may suddenly increase due to kickdown.

Driving on a downhill slope
When driving on a downhill slope in “D”, engine braking may not be very effective, and vehicle speed may become too high.
- Depending on the slope, shift into “2” in advance and use the engine brake together.
- When you need a strong engine brake on a steep downhill slope, shift into “L”.

⚠ WARNING

If you continuously depress the brake pedal on a downhill slope, the brakes could overheat and become ineffective.
Use engine braking in tandem with regular braking when driving on a steep or long downhill slope.

NOTE:
If the overdrive OFF switch is pushed in to convert the 3-speed mode while driving at “D”, you can drive smoothly with little change in engine rotation on the uphill slope, and get light engine braking on the downhill slope.

Stopping the vehicle temporarily

1) With the gearshift lever in the driving position, stop the vehicle and firmly depress the brake pedal.
- To temporarily stop the vehicle on a steep slope, pull the parking brake lever if necessary.
- If you are likely to stop the vehicle for a long time, put the gearshift lever into the “N”.

2) To avoid making a mistake when starting to move the vehicle again, visually check that the position of the gearshift lever and the gearshift lever position in the instrument cluster are correct, and that the parking brake is released.

⚠ WARNING

If the gearshift lever is in the position other than “P” or “N”, there is the danger that revving the engine could cause unexpected movement and result in an accident.
When the vehicle is temporarily stopped, do not rev the engine.

NOTICE

If you try to stop the vehicle on an uphill slope by operating the accelerator pedal, the transmission fluid will overheat, resulting in a malfunction. Do not stop the vehicle on an uphill slope by operating the accelerator pedal.

Parking the vehicle

1) Completely stop the vehicle.
2) With the brake pedal depressed, pull the parking brake lever firmly.

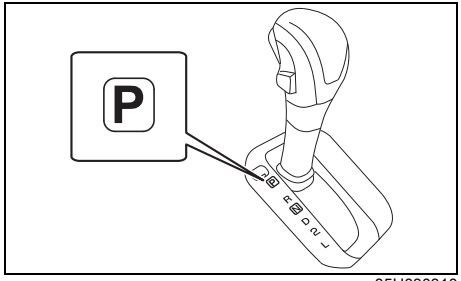

85U030310

3) Shift the gearshift lever into “P”, stop the engine and slowly release your foot from the brake pedal.

• Visually check that the gearshift lever is in “P”.

⚠ WARNING

If the gearshift lever is in the position other than “P”, the shift lock will not operate, resulting in wrong operation of the gearshift lever and an accident. When you park the vehicle, shift the gearshift lever into “P” and then stop the engine.

NOTE:
When you shift the gearshift lever into “P” and stop the engine before pulling the parking brake lever, if you try to restart the engine and shift the gearshift lever into the position other than “P”, it may reduce gearshift lever capability, or unusual sound and shock may occur. However, this is not abnormal.

4) Turn the ignition switch to the “LOCK” position and remove the key.

Reversing the vehicle

Correct posture of driving

When driving the vehicle in reverse, your body’s posture will become twisted, making it difficult to depress the pedals correctly. Ensure that you are able to maintain proper contact and pressure on the brake pedal and the accelerator pedal while operating the vehicle.

When repeating forward and reverse movements

When repeating forward and reverse movements while parking in a garage, etc., depress the brake pedal to stop completely, then operate the gearshift lever, and check the gearshift lever position in the instrument cluster to confirm your selection of “D” for forward movement or “R” for reverse movement.

NOTE:
When repeating forward and reverse movements, you may forget that the gearshift lever is in "R". Shortly after reversing the vehicle, shift the gearshift lever from "R" to "N".

Other points to be noted

When moving the vehicle in short distance

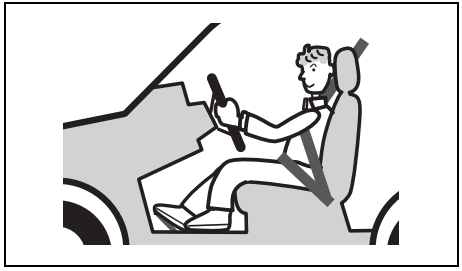

80J014

Even when moving the vehicle only in short distance, maintain correct driving posture to ensure proper contact and pressure on the brake pedal and the accelerator pedal.

⚠ CAUTION

If you allow the vehicle to move backward by coasting while the gearshift lever is in a forward-driving position ("D", "2" or "L"), or allow it to move forward by coasting while in a reverse-driving position ("R"), the engine could stall, reducing braking and steering capability and possibly resulting in an accident. Also, this could cause a malfunction of the vehicle.
When driving the vehicle on slopes, do not perform the above-mentioned operations.

When stopping the vehicle

NOTICE

If you shift the gearshift lever into "P" even while the vehicle is slightly in motion, the automatic transmission will be damaged.
Do not shift the gearshift lever into "P" even while the vehicle is slightly in motion.

Transfer lever

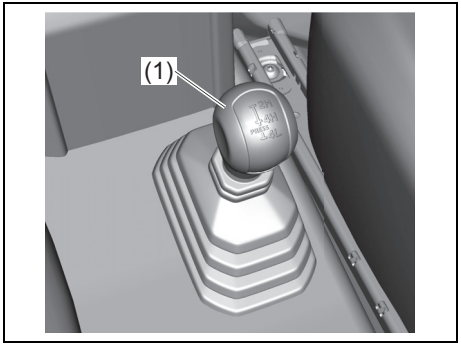

78RB03022

(1) Transfer lever

Your vehicle is equipped with the "ALL GRIP PRO" system that consists of a transfer case with a synchronizer (between 2WD-high and 4WD-high positions) and the air locking hubs. With this feature, you can shift the drive mode between 2-wheel drive high range and 4-wheel drive high range by shifting the "2H" or "4H" position. Stop the vehicle or reduce the speed to less than 100 km/h (60 mph) with the front wheels in the straight ahead position. Do not shift the transfer lever without depressing the accelerator pedal. Do not activate the cruise control system when shifting the transfer lever.

Free axle mechanism

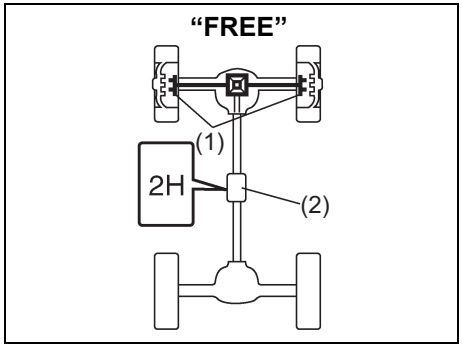

85U030280

Fixed axle mechanism

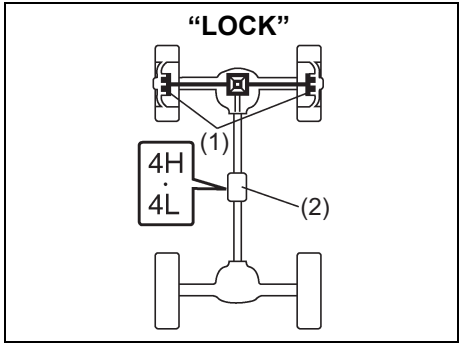

85U030270

(1) Air locking hubs
(2) Transfer case

NOTE:

- *The air locking hubs are activated by the vacuum of the engine and changed to shift the front wheel drive. The air locking hubs are not shifted when the engine is stopping. Several seconds are required from the operation of the transfer lever to the activation of air locking hubs.*
- *When the front tyres receive a big shock during running in 2-wheel drive position on the road surface of the big irregularity, etc, some noise may occur inside the air locking hubs afterwards. In this situation, stop the vehicle and then shift the transfer lever into "4H" position. After that, shift the transfer lever into "2H" position again.*

Description of transfer lever positions and indicator light

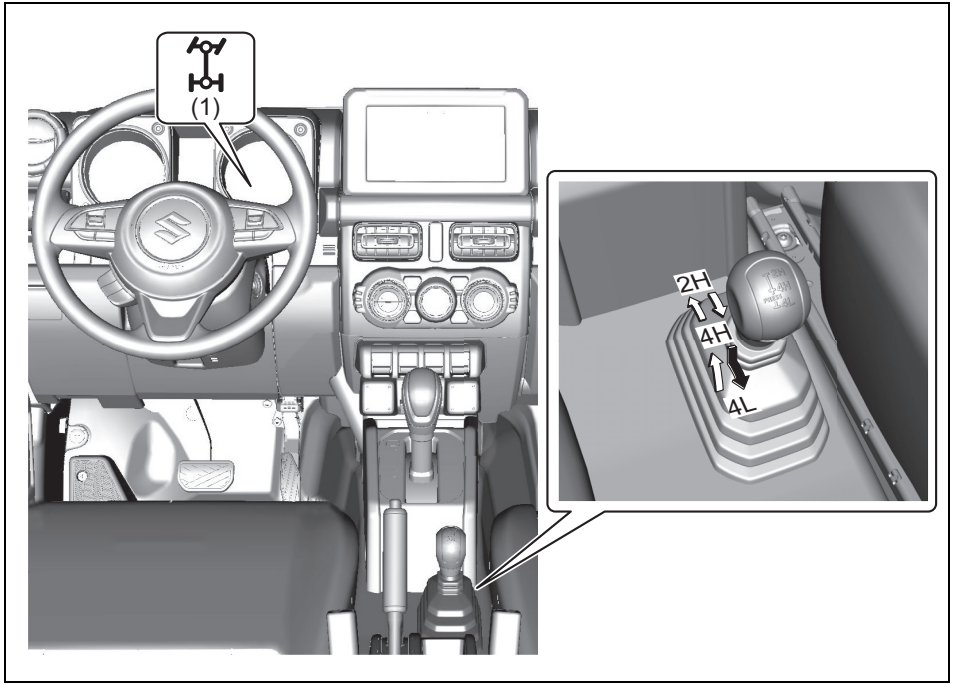

85U030290

(1) 4WD indicator light

⇧⇩	Shift the transfer lever without the lever pressed.
⬇	Shift the transfer lever with the lever pressed.

Transfer lever position	Wheel drive position	Indicator light 4WD indicator light	Description
2H	2-wheel drive position	–	In this position, engine power is supplied to the rear axle only. Use this position for normal driving.
4H	4-wheel drive high range position	 78RB03024	In this position, engine power is supplied to the front and rear axles at normal speed, providing greater traction than 2-wheel drive. Use this position for off-road driving, or for driving on slippery roads (icy, snow-covered, muddy, etc.)
4L	4-wheel drive low range position	 78RB03024	In this position, engine power is supplied to the front and rear axles at reduced speed. Use this position for off-road driving on soft or slippery surfaces, or for climbing or descending steep, slippery hills.

NOTICE

- **Never operate your vehicle in “4H” or “4L” on dry pavement and, as much as possible, avoid using “4H” or “4L” on wet pavement, as this may seriously damage the drive train.**
- **If the transfer lever is returned to the original position while shifting the transfer lever, the drive train may be damaged.**
- **When you turn suddenly on a sharp curve, a side road, or a parking space in “4H” or “4L” position, the turning strength of the steering wheel will be growing big and tight corner braking phenomenon* may occur and result in accidents. 4-wheel drive system damage could also result.**

*Tight corner braking phenomenon is the similar situation to depress the brake when the drive train is in 4-wheel drive position (“4H” or “4L”) and the steering wheel is turned suddenly and then the revolution difference between the front wheels and the rear wheels could not absorb.

NOTE:
- *When you select the "4L" position, the ESP® systems (other than ABS) will be canceled to provide improved vehicle traction, and the ESP® OFF indicator light, Dual Sensor Brake Support II (DSBS II) OFF indicator light and lane departure prevention OFF indicator light will come on.*
  When you select the "4L" position, braketraction control can be activated. Braketraction control brakes the spinning wheel to distribute drive power to the other wheels for increased climbing ability or for better performance on a rolling hill or a slippery surface.
- *If Dual Sensor Brake Support II (DSBS II) OFF indicator light and lane departure prevention OFF indicator light come on or go off, the interior buzzer beeps. This is not a malfunction.*

Transfer lever operation

NOTICE

- **Unevenly worn tyres can cause problems in the operation of the transfer lever. Be sure to rotate the tyres according to the maintenance schedule. Refer to "Tyres" and "Maintenance Schedule" in the "INSPECTION AND MAINTENANCE" section for proper tyre rotation procedures.**
- **If a problem exists during the shifting function, all lights of the 4WD indicator will blink continuously and the transfer lever operation will not work.**
  If the shift function does not work after trying the shifting operation several times, it may be the result of a system failure. Have the system inspected by an authorized SUZUKI dealer or a qualified workshop.

NOTE:
- *When the temperature of 4-wheel drive system or the transmission is not warm under the low temperature, you may feel it hard to shift the transfer lever or gear noise may occur.*
- *Unless you can shift the transfer lever, drive your vehicle for a while and then shift the transfer lever again.*

Operate the transfer lever according to the appropriate procedure described below:

From "2H" position to "4H" position
From "4H" position to "2H" position

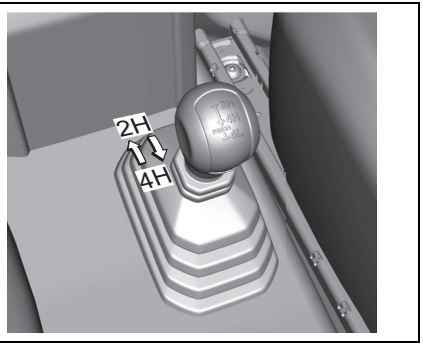

78RB03026

The transfer lever can be shifted when the vehicle is either stopped or moving.
Position the front wheels straight ahead and shift the transfer lever from "2H" to "4H" or "4H" to "2H". If the vehicle is moving, the speed must be less than 100 km/h (60 mph) during this operation.

⚠ WARNING

Do not shift the transfer lever while the rear tyre is spinning. Your vehicle may move to the unexpected direction. 4-wheel drive system may be also damaged.

NOTICE
Pay attention to shifting the transfer lever safely when driving your vehicle.

NOTE:
- *After shifting the transfer lever from "2H" to "4H", check that the 4WD indicator light comes on.*
- *After shifting the transfer lever from "4H" to "2H", check that the 4WD indicator goes off.*
- *When 4WD indicator light is blinking after shifting the transfer lever to "4H" position, accelerate, slow down your vehicle or stop and reverse your vehicle a little to shift the transfer lever. Pay attention to the vehicles and the circumference toward or backward your vehicle when shifting the transfer lever.*
- *When you shift the transfer lever while turning the steering wheel or depressing the accelerator pedal, shifting the transfer lever may be difficult.*
- *Operate the transfer lever while driving at low speed if it may be difficult to shift the transfer lever from "2H" position to "4H" position when the vehicle is stopped.*
- *Shift the transfer lever again after decelerating or stopping the vehicle if it may be difficult to shift the transfer lever from "2H" position to "4H" position while driving or when the gear noise occurs.*
- *There may be a case to operate the transfer lever heavily when shifting the transfer lever from "4H" position to "2H" position while driving. In this case, position the front wheels straight ahead and drive for a while and then operate shifting the transfer lever again.*
- *When the transfer lever is shifted from 2H" position to "4H" position or from "4H" position to 2H" position and the air locking hubs are activated, the air conditioning system may not be operated for several seconds. This is not a malfunction.*
- *When the ignition switch is turned "ON" or press the engine switch to change the ignition mode to ON after the transfer lever is shifted from 2H" position to "4H" position or from "4H" position to 2H" position while stopping the engine, 4WD indicator light may blink. This is not a malfunction.*

From "4H" position to "4L" position

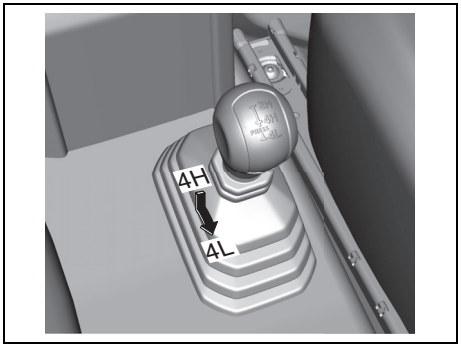

78RB03027

Stop the vehicle completely, place the transmission in "N" (Neutral) or depress the clutch pedal fully (if equipped), then shift the transfer lever from "4H" position to "4L" position by pressing the transfer lever.

⚠ WARNING

When you turn off the engine while the transfer is not finished to shift into "4L" position, follow instructions below.

1) Depress the brake pedal* fully.
2) Turn the ignition switch to "OFF" position or press the engine switch to change the ignition mode to LOCK (OFF).

*** Depress the brake pedal until the engine is started again.**

- **Even though the gearshift lever is shifted into 1st gear or "R" (Reverse) gear for manual transmission vehicles or shifted into "P" (Park) position for automatic transmission vehicles, there may be a case that the wheels of the vehicle is not stationary.**

When you turn off the engine in this situation, start the engine again and move the vehicle forward or backward slowly.

⚠ CAUTION

- **Do not operate the transfer lever while driving.**
- **Do not operate the transfer lever while making a left or right turn or while holding rear wheels slipped on icy, snow-covered, or muddy roads. Your vehicle may move to the unexpected direction. 4-wheel drive system may be also damaged.**

NOTE:

- *There may be a case that you will feel the difficulty to operate the transfer lever when shifting the transfer lever from "4H" position to "4L" position. Operate the transfer lever into "4L" position surely.*
- *When shifting the transfer lever from "4H" position to "4L" position, the buzzer will sound and the function of the ESP® system and the vehicle stability control system will be deactivated.*
- *Even if the interior buzzer sounds, the shift to "4L" is not complete, so firmly shift the transfer lever to the "4L" position.*
- *There may be a case that shifting into "4L" position is not completed when the transfer system or the transmission is not warm in the cold weather. There may be a possibility of difficulty to shift especially for automatic transmission vehicles in the cold weather. Follow instructions below in this case and operate the transfer lever again.*
  - *– Stop the vehicle completely.*
  - *– Place the transmission in "N" (Neutral).*
  - *– Depress the brake pedal* fully.*
  - *– Release the parking brake.*
  - *– Turn the ignition switch to "OFF" position or press the engine switch to change the ignition mode to LOCK (OFF).*
  - *– Shift the transfer lever from "4H" position to "4L" position by pressing the transfer lever.*

– *Check whether the vehicle can be moved by moving the vehicle forward or backward slowly.*

** Depress the brake pedal until the engine is started again.*

- *There may be a case that it is difficult to operate the transfer lever or the gear noise occurs after driving the vehicle for a while in the cold weather. There may be a possibility of difficulty to shift the transfer lever from "4H" position to "4L" position. In this case, shift the transfer lever into "4H" position or "2H" position and then operate the transfer lever again after driving for a while.*

From "4L" position to "4H" position

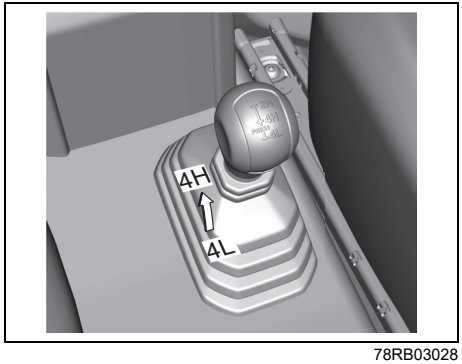

78RB03028

Stop the vehicle completely, place the transmission in "N" (Neutral) or depress the clutch pedal fully (if equipped), then shift the transfer lever from "4L" position to "4H" position.

SUZUKI SAFETY SUPPORT (if equipped)

SUZUKI SAFETY SUPPORT consists of the driving assist systems and contributes to a safe and comfortable driving experience.

⚠ WARNING

SUZUKI SAFETY SUPPORT

SUZUKI SAFETY SUPPORT is designed to under the assumption that the driver will drive safely, and is designed to help reduce the impact to the occupants in a collision and assist the driver under normal driving conditions.
As there is a limit to the degree of recognition accuracy and control performance that this system can provide, do not overly rely on this system. The driver is solely responsible for paying attention to the vehicle's surroundings and driving safely.
(Continued)

⚠ WARNING

(Continued)

For safe use

- **Do not overly rely on this system. The driver is solely responsible for paying attention to the vehicle's surroundings and driving safely. This system may not operate in all situations and provided assistance is limited. Over-reliance on this system to drive the vehicle safely may lead to an accident resulting in death or serious injury.**
- **Do not attempt to test the operation of the system, as it may not operate properly, possibly leading to an accident.**
- **When driver's attention is necessary or the system has malfunction, a warning message will appear or a warning buzzer will sound to get your attention for driving. When you see a warning message on the display, follow the message to drive safely.**
- **Depending on external noise, the volume of the audio system, etc. it may be difficult to hear the warning buzzer. Also, depending on the road conditions, it may be difficult to recognize the operation of the system.**

(Continued)

⚠ WARNING

(Continued)

When it is necessary to disable the system

In the following situations, make sure to disable the system.
Failure to do so may lead to the system not operating properly, possibly leading to an accident resulting in death or serious injury.

- **When the vehicle is tilted due to being overloaded or having a flat tyre**
- **When towing another vehicle**
- **When the vehicle is being transported by a truck, ship, train, etc.**
- **When the vehicle is raised on a lift and the tyres are allowed to rotate freely**
- **When inspecting the vehicle using a drum tester such as a chassis dynamometer or speedometer tester, or when using an on vehicle wheel balancer**
- **When the vehicle is driven in a sporty manner or off-road**
- **When using an automatic car wash**

(Continued)

⚠ WARNING

(Continued)

- **When a sensor is misaligned or deformed due to a strong impact being applied to the sensor or the area around the sensor**
- **When accessories which obstruct a sensor or light are temporarily installed to the vehicle**
- **When a compact spare tyre or tyre chains are installed to the vehicle or an emergency tyre puncture repair kit has been used**
- **When the tyres are excessively worn or the inflation pressure of the tyres is low**
- **When tyres other than the manufacturer specified size are installed**
- **When the vehicle cannot be driven stably, due to a collision, malfunction, etc.**

NOTE:
The system's detection of preceding vehicles, obstacles, parking (lot) lines and road signs is limited within field of view.
Also, it will take several seconds to become subject to control and alarm after an object enters the detectable field of view.

Driving assist systems

- Dual Sensor Brake Support II (DSBS II)
- Lane departure prevention system (if equipped)
- Vehicle swaying warning
- High beam assist
- Traffic sign recognition
- Adaptive cruise control (if equipped)
- Adaptive cruise control (with following function for all speeds) (if equipped)
- Parking sensors
- Low speed brake support (forward and backward) (if equipped)

⚠ WARNING

<u>If accurate tyre rotation speed cannot be detected</u>

If accurate tyre rotation speed cannot be detected such as the specified tyre pressure is not maintained, following functions may not operate properly.
- **Dual Sensor Brake Support II (DSBS II)**
- **Lane departure prevention system**
- **Adaptive cruise control**
- **Adaptive cruise control (with the following function for all speeds)**
- **Low speed brake support (forward and backward)**

NOTE:
- *When the transfer lever is shifted to "4L" position, the Dual Sensor Brake Support II (DSBS II) OFF indicator light and lane departure prevention OFF indicator light will come on, and turn off the SUZUKI SAFETY SUPPORT. For operation of transfer lever, refer to "Transfer lever operation" in this section.*
- *For Hong Kong, Macao and Singapore models are vehicle with Low speed brake support (forward and backward). For details, refer to "For Hong Kong, Macao and Singapore" in the "SUPPLIMENT" section.*

Sensors used by SUZUKI SAFETY SUPPORT

Various sensors are used to obtain the necessary information for system operation.

Sensors which detect the surrounding conditions

Front

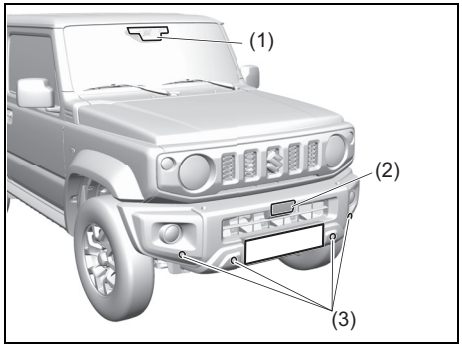

85U050010

(1) Front camera (DSBS II)
(2) Front radar (DSBS II)
(3) Ultrasonic sensors

Rear

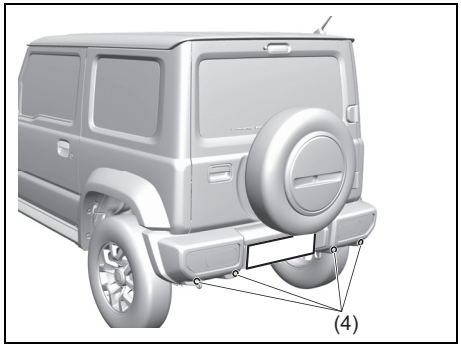

85U050020

(4) Ultrasonic sensors

⚠ WARNING

<u>To prevent malfunction of the front camera (DSBS II)</u>

Observe the following precautions. Failure to do so may lead to the front camera (DSBS II) not operating properly, possibly leading to an accident resulting in death or serious injury.

- **Always keep the windshield clean.**
  - **– If the windshield is dirty or covered with an oily film, water droplets, snow, etc., clean the windshield.**
  - **– Even if a glass coating agent is applied to the windshield, it will still be necessary to use the windshield wipers to remove water droplets, etc. from the area of the windshield in front of the front camera (DSBS II).**
  - **– If the inner side of the windshield where the front camera (DSBS II) is installed is dirty, contact an authorized SUZUKI dealer or a qualified workshop for details.**

(Continued)

⚠ WARNING

(Continued)

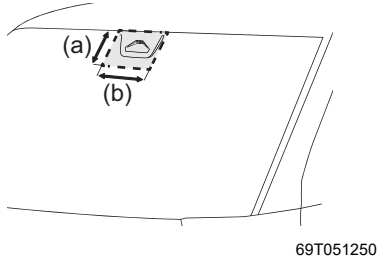

(a) Approximately 15 cm (5.9 inch)
(b) Approximately 30 cm (11.8 inch)

- **Do not attach stickers (including transparent stickers) or other items to the area of the windshield in front of the front camera (DSBS II) (shaded area in the illustration).**
- **Do not place anything near the front of the windshield that may block the view of the front camera (DSBS II).**
- **If the part of the windshield in front of the front camera (DSBS II) is fogged up or covered with condensation or ice, use the windshield defogger to remove the fog, condensation, or ice.**

(Continued)

⚠ WARNING

(Continued)

- **If water droplets cannot be properly removed from the area of the windshield in front of the front camera (DSBS II) by the windshield wipers, replace the wiper insert or wiper blade.**
- **When replacing the front wiper body or blades, use the specified ones (for more information, contact an authorized SUZUKI dealer or a qualified workshop).**
- **Do not attach window tint to the windshield.**
- **Replace the windshield if it is damaged or cracked.**
  If the windshield has been replaced, recalibration of the front camera (DSBS II) will be necessary.
  Contact an authorized SUZUKI dealer or a qualified workshop for details.
- **Do not allow liquids to contact the front camera (DSBS II).**
- **Do not allow bright lights to shine into the front camera (DSBS II).**

(Continued)

⚠ WARNING

(Continued)

- **Do not damage the lens of the front camera (DSBS II) or allow it to become dirty.**
  When cleaning the inside of the windshield, do not allow glass cleaner to contact the lens of the front camera (DSBS II). Do not touch the lens of the front camera (DSBS II).
  If the lens of the front camera (DSBS II) is dirty or damaged, contact an authorized SUZUKI retailer or a qualified workshop for details.
- **Do not subject the front camera (DSBS II) to a strong impact.**
- **Do not change the position or orientation of the front camera (DSBS II) or remove it.**
- **Do not disassemble the front camera (DSBS II).**
- **Do not modify any parts around the front camera (DSBS II), such as the inside rear view mirror or ceiling.**
- **Do not attach accessories which may obstruct the front camera (DSBS II) to the hood, front grille, or front bumper.**
  Contact an authorized SUZUKI retailer or a qualified workshop for details.

(Continued)

⚠ WARNING

(Continued)

- **If a surfboard or other long object is to be mounted on the roof, make sure that it will not obstruct the front camera (DSBS II).**
- **Do not modify or change the headlights and other lights.**

Front camera (DSBS II) installation area on the windshield

If the system determines that the windshield may be fogged up, it will automatically operate the heater to defog the part of the windshield around the front camera (DSBS II). When cleaning, etc., be careful not to touch the area around the front camera (DSBS II) until the windshield has cooled sufficiently, as touching it may cause burns.

(Continued)

⚠ WARNING

(Continued)

To prevent malfunction of the front radar (DSBS II)

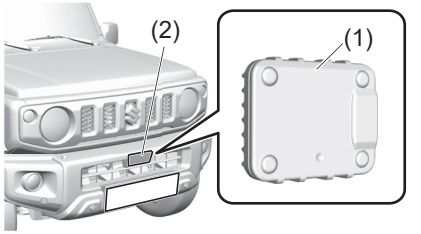

85U050030

(1) Front radar (DSBS II)
(2) Front radar cover

Observe the following precautions. Failure to do so may lead to the front radar (DSBS II) not operating properly, possibly leading to an accident resulting in death or serious injury.

- **Keep the front radar (DSBS II) and front radar cover clean at all times. Clean the front of the front radar (DSBS II) or the front or back of the front radar cover if it is dirty or covered with water droplets, snow, etc. Clean the front radar (DSBS II) and front radar cover with a soft cloth so as to not mark or damage them.**

(Continued)

⚠ WARNING

(Continued)

- **Do not attach accessories, stickers (including transparent stickers), aluminum tape, etc. to the front radar (DSBS II) or front radar cover and their surrounding area.**
- **Do not subject the front radar (DSBS II) or its surrounding area to impact. If the front radar (DSBS II), the front grille, or front bumper has been subjected to a impact, have the vehicle inspected by an authorized SUZUKI dealer or a qualified workshop.**
- **Do not disassemble the front radar (DSBS II).**
- **Do not modify or paint the front radar (DSBS II) or front radar cover, or replace them with anything other than SUZUKI genuine parts.**
- **In the following situations, recalibration of the front radar (DSBS II) will be necessary. Contact an authorized SUZUKI dealer or a qualified workshop for details.**
  - **– When the front radar (DSBS II) is replaced**
  - **– When the front bumper or the front grille has been replaced**

(Continued)

Situations in which the front camera (DSBS II) and front radar (DSBS II) may not operate properly

- *When the height or inclination of the vehicle has been changed due to modifications*
- *When the windshield is dirty, fogged up, cracked or damaged*
- *When a sensor is extremely hot or cold*
- *When mud, water, snow, dead insects, foreign matter, etc., is attached to the front of the sensor*
- *When in inclement weather such as heavy rain, fog, snow, or a sandstorm*
- *When water, snow, dust, etc. is thrown up in front of the vehicle, or when driving through mist or smoke*
- *When the headlights are not illuminated while driving in the dark, such as at night or when in a tunnel*
- *When the lens of a headlight is dirty and illumination is weak*
- *When the headlights are misaligned*
- *When a headlight is malfunctioning*
- *When the headlights of another vehicle, sunlight, or reflected light shines directly into the front camera (DSBS II)*
- *When the brightness of the surrounding area changes suddenly*
- *When driving near a TV tower, broadcasting station, electric power plant, radar equipped vehicle, etc., or other location where strong radio waves or electrical noise may be present*
- *When a wiper blade is blocking the front camera (DSBS II)*
- *When in a location or near objects which strongly reflect radio waves, such as the following:*
  - *Tunnels*
  - *Truss bridges*
  - *Gravel roads*
  - *Rutted, snow-covered roads*
  - *Walls*
  - *Large trucks*
  - *Manhole covers*
  - *Metal plates*
  - *Guardrail*
- *When near a step or protrusion*
- *When a detectable vehicle is narrow, such as a small mobility vehicle*
- *When a detectable vehicle has a small front or rear end, such as an unloaded truck*

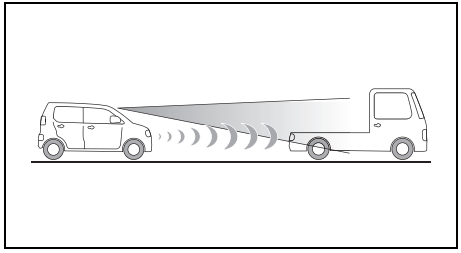

69TJ050010

- *When a detectable vehicle has a low front or rear end, such as a low bed trailer*

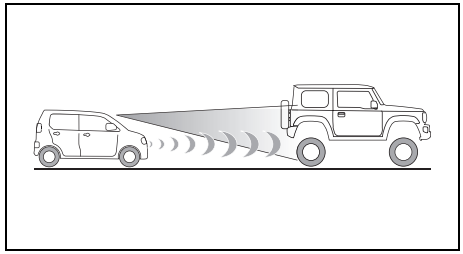

69TJ050020

- *When a detectable vehicle has extremely high ground clearance*
- *When a detectable vehicle is carrying a load which protrudes from its cargo area*
- *When a detectable vehicle has little exposed metal, such as a vehicle which is partially covered with cloth, etc.*
- *When a detectable vehicle is irregularly shaped, such as a tractor, sidecar, etc.*
- *When the distance between the vehicle and a detectable vehicle has become extremely short*
- *When a detectable vehicle is at an angle*
- *When a large amount of snow, mud, etc. is attached to a detectable vehicle*
- *When driving on the following kinds of roads:*
  - *Roads with sharp curves or winding roads*
  - *Roads with changes in grade, such as sudden inclines or declines*
  - *Roads which are sloped to the left or right*
  - *Roads with deep ruts*

– *Roads which are rough and unmaintained*
– *Roads which frequently undulate or are bumpy*
- *When the steering wheel is being operated frequently or suddenly*
- *When the vehicle is not in a constant position within a lane*
- *When parts related to this system, the brakes, etc. are extremely hot or cold, wet, etc.*
- *When the wheels are misaligned*
- *When driving on slick road surfaces, such as when it is covered with ice, snow, gravel, etc.*
- *When the course of the vehicle differs from the shape of a curve*
- *When the vehicle speed is excessively high when entering a curve*
- *When entering/exiting a parking lot, garage, car elevator, etc.*
- *When driving in a parking lot*
- *When driving through an area where there are obstructions which may contact your vehicle, such as tall grass, tree branches, a curtain, etc.*
- *When the wind is strong*

Situations in which the lane may not be detected

- *When the lane is extremely wide or narrow*
- *Immediately after changing lanes or passing through an intersection*
- *When driving in a temporary lane or lane regulated by construction*
- *When there are structures, patterns, shadows which are similar to lane lines in the surrounding*
- *When the lane lines are not clear or driving on a wet road surface*
- *When a lane line is on a curb*
- *When driving on a bright, reflective road surface, such as concrete*
- *When there are multiple white lines in the same lane*

Situations in which some or all of the functions of the system cannot operate

- *When a malfunction is detected in this system or a related system, such as the brakes, steering, etc.*
- *When the ESP® or other safety related system is operating*
- *When the ESP® or other safety related system is off*

Changes in brake operation sound and pedal response

- *When the brakes have been operated, brake operation sounds may be heard and the brake pedal response may change, but this does not indicate a malfunction.*
- *When the system is operating, the brake pedal may feel stiffer than expected or sink. In either situation the brake pedal can be depressed further. Further depress the brake pedal as necessary.*

Temporary stop or failure of the dual sensor
The following chart shows the temporary stop or failure of the dual sensor.

	Instrument cluster	Information display message	Dual sensor	
			Temporary stop	Failure
(1)		–	On	
(2)		–	On	
(3)		–	On	
(4)		–	On	
(5)	–	“DSBS II SYSTEM STOPPED”	On	Off
(6)	–	“DSBS II SYSTEM DISABLED”	Off	On
(7)		–	Blinks	

(1) Dual Sensor Brake Support II (DSBS II) OFF indicator light
(2) Lane departure prevention indicator light
(3) Adaptive cruise control indicator light
(4) High beam assist warning light (yellow)
(5) Indication of information display
(6) Indication of information display
(7) Master warning indicator

The message may be shown in the following situations:
- When driving the vehicle on a dark road without street lamps
- When driving the vehicle on a steep slope
- When trying to stop the vehicle in a garage
- When slowly approaching forward to an unicolor wall
- When slowly approaching forward to a shutter or a horizontal-striped wall

NOTE:
When the function of the dual sensor is temporarily stopped or malfunctioning, the following functions will be turned off.
- *Dual Sensor Brake Support II (DSBS II)*
- *Lane departure prevention system (if equipped)*
- *Vehicle swaying warning*
- *High beam assist*
- *Adaptive cruise control (if equipped)*
- *Adaptive cruise control (with following function for all speeds) (if equipped)*

Temporary stop of the dual sensor
Under the following situations, the function of the dual sensor stops temporarily.
When the situations are improved, the temporary stop of the function will be canceled.

Message	Cause	Remedy
"DSBS II SYSTEM STOPPED"	Under the following situations, the function of the dual sensor stops temporarily. • When the systems related to SUZUKI SAFETY SUPPORT stop temporarily • When the lead-acid battery has a voltage abnormality	Drive with caution until the cause is resolved. If the message remains on the information display after a while, consult with an authorized SUZUKI dealer or a qualified workshop.
"F CAMERA STOPPED (TEMP)"	Since the temperature of the body of front camera (DSBS II) is low or high, the function of the dual sensor stops temporarily.	• Drive with caution until the cause is resolved. • If the message remains on the information display after a while, consult with an authorized SUZUKI dealer or a qualified workshop. • If the front camera (DSBS II) is hot, such as after the vehicle is parked in the sun, use the air conditioning system to decrease the temperature around the front camera (DSBS II). • If the front camera (DSBS II) is cold, such after the vehicle is parked in an extremely cold environment, use the air conditioning system to increase the temperature around the front camera (DSBS II)
"F CAMERA STOPPED (LOW VIS)"	The dual sensor functions are temporarily stopped, because visibility from the front camera (DSBS II) is poor. Possible reasons are as follows • When there is bad weather such as heavy rain, fog or a blizzard • When the windshield in front of the front camera (DSBS II) is covered with dirt or foreign material • When the windshield in front of the front camera (DSBS II) is fogged up	Use the windshield wiper in bad weather. If the temporary stop of function is not canceled even if the windshield wiper is used, wait for the weather to improve. • Using the windshield wipers, remove the dirt or foreign material from the windshield. • Using the air conditioning system, defog the windshield. • Close the hood, remove any stickers, etc. to avoid blocking view of the front camera (DSBS II).

Message	Cause	Remedy
“CLEAN EXTERNAL RADAR”	The function of the system stops temporarily due to failure of radar. Possible reason is as follows. • When the surrounding areas of radar is covered with dirt, oil film or raindrops	Wipe off dirt, oil film and raindrops from the surrounding areas of radar with a soft cloth.
“F RADAR STOPPED (TEMP)”	Since the temperature of the body of front radar (DSBS II) is low or high, the function of the system stops temporarily.	Drive with caution until the cause is resolved. If the message remains on the information display after a while, consult with an authorized SUZUKI dealer or a qualified workshop.
“F RADAR STOPPED (CALIB)”	The function of the system stops temporarily due to bad angle of the front radar (DSBS II).	• If the message remains on the information display after a while, consult with an authorized SUZUKI dealer or a qualified workshop. • Check if there is any foreign material attached to the front radar (DSBS II) or front radar cover and clean them if necessary.

Dual Sensor Brake Support II (DSBS II)

The Dual Sensor Brake Support II (DSBS II) uses sensors to detect objects in the path of the vehicle. When the system determines that the possibility of a frontal collision with a detectable object is high, a warning operates to urge the driver to take evasive action. If the system determines that the possibility of a collision is extremely high, the brakes are automatically applied to help avoid the collision or help reduce the impact of the collision.
The Dual Sensor Brake Support II (DSBS II) can be disabled/enabled and the warning timing can be changed. Refer to "Dual Sensor Brake Support II (DSBS II) OFF switch" in this section.

⚠ WARNING

For safe use

- **Driving safely is solely the responsibility of the driver. Pay careful attention to the surrounding conditions in order to ensure safe driving. Never use the Dual Sensor Brake Support II (DSBS II) in place of normal braking operations. This system cannot help avoid or reduce the impact of a collision in every situation. Over-reliance on this system to drive the vehicle safely may lead to an accident resulting in death or serious injury.**
- **Although the Dual Sensor Brake Support II (DSBS II) is designed to help avoid or help reduce the impact of a collision, its effectiveness may change according to various conditions. Therefore, it may not always be able to achieve the same level of performance. Read the following items carefully. Do not overly rely on this system and always drive carefully.**
  - **Refer to "For safe use" (P.3-48) in this section.**

(Continued)

⚠ WARNING

(Continued)

When to disable the Dual Sensor Brake Support II (DSBS II)

- **Refer to "When it is necessary to disable the system" (P.3-48) in this section.**

Detectable objects

The system can detect the following as detectable objects. (Detectable objects differ depending on the function.)

- Vehicles
- Bicycles*1
- Pedestrians
- Motorcycles*1

*1: Detected as a detectable object only when being ridden.

System functions

• Frontal collision warning

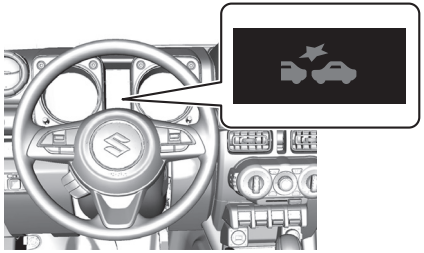

85U030050

"DUAL SENSOR BRAKE SUPPORT"

When the system determines that the possibility of a collision is high, a buzzer will sound and an image and warning message will be displayed on the information display to urge the driver to take evasive action.

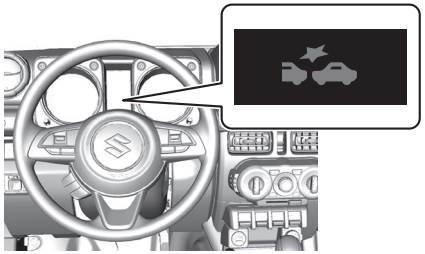

85U030050

"ACCELERATOR PEDAL IS PRESSED"

If the system determines that the accelerator pedal is strongly depressed, the above image and message will be displayed on the information display.

• Brake assist system

If the system determines that the possibility of a collision is high and the brake operation by the driver is insufficient, the braking power will be increased.

• Automatic brake system

If the system determines that the possibility of a collision is extremely high, the brakes are automatically applied to help avoid the collision or reduce the impact of the collision.

• Intersection collision avoidance support (left/right turn) (if equipped)

In situations such as the following, if the system determines that the possibility of a collision is high, the frontal collision warning and the automatic brake system will operate. Depending on the intersection, assistance may not operate correctly.

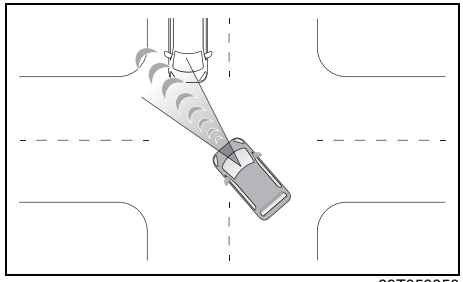

69T050050

- When turning left/right at an intersection and crossing the path of an oncoming vehicle

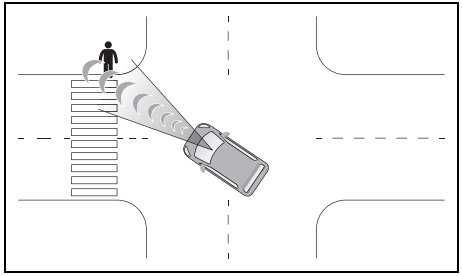

69T050060

- When turning left/right at an intersection and crossing an oncoming pedestrian or bicycle is detected

• Intersection collision avoidance support (crossing vehicles) (if equipped)

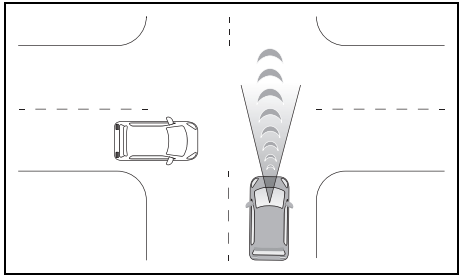

69T050070

At an intersection, etc., if the system determines that the possibility of a collision with an approaching vehicle is high, the frontal collision warning and the automatic brake system will operate. Depending on the intersection, assistance may not operate correctly.

⚠ WARNING

Automatic brake system

- **When the automatic brake system function is operating, a large amount of braking force will be applied.**
- **The automatic brake system function is not designed to hold the vehicle stopped. ?If the vehicle is stopped by automatic brake system function, the driver should operate the brakes immediately as necessary.**
- **In the following situations, brake hold will not operate after the automatic brake system function has operated. Depending on the situation, the driver should operate the brake pedal immediately.**
  - **– When the accelerator pedal is depressed**
  - **– When the vehicle is stopped by intersection collision avoidance support**
  - **– When the vehicle is stopped on a steep slope**

(Continued)

⚠ WARNING

(Continued)

- **The automatic brake system function may not operate if certain operations are performed by the driver. If the accelerator pedal is being depressed strongly or the steering wheel is being turned, the system may determine that the driver is taking evasive action and the automatic brake system function may not operate or may be deactivated.**
- **If the brake pedal is being depressed, the system may determine that the driver is taking evasive action and possibly delay the operation timing of the automatic brake system.**

NOTE:
Operating conditions of each function of the Dual Sensor Brake Support II (DSBS II)
The Dual Sensor Brake Support II (DSBS II) is enabled and the system determines that the possibility of a frontal collision with a detected object is high, the system will operate.
However, the system will not operate in the following situations:
- *When the gearshift lever is in "R" position*
- *When the ESP® OFF indicator is illuminated (only the frontal collision warning function will be operational)*

The following are the operational speeds and cancelation conditions of each function:

- *Frontal collision warning*

For Australia, New Zealand, Hong Kong, Macao, Singapore, Taiwan and UAE model

Detectable objects	***Vehicle speed***	***Relative speed between your vehicle and object***
Preceding vehicles, stopped vehicles	*Approximately 5 to 180 km/h (3 to 112 mph)*	*Approximately 5 to 180 km/h (3 to 112 mph)*
Oncoming vehicles	*Approximately 30 to 180 km/h (19 to 112 mph)*	*Approximately 80 to 220 km/h (50 to 137 mph)*
Bicycles	*Approximately 5 to 80 km/h (3 to 50 mph)*	*Approximately 5 to 80 km/h (3 to 50 mph)*
Pedestrians	*Approximately 5 to 80 km/h (3 to 50 mph)*	*Approximately 5 to 80 km/h (3 to 50 mph)*
Preceding motorcycles, stopped motorcycles	*Approximately 5 to 180 km/h (3 to 112 mph)*	*Approximately 5 to 80 km/h (3 to 50 mph)*

Except for Australia, New Zealand, Hong Kong, Macao, Singapore, Taiwan and UAE model

Detectable objects	*Vehicle speed*	*Relative speed between your vehicle and object*
Preceding vehicles, stopped vehicles	*Approximately 5 to 180 km/h (3 to 112 mph)*	*Approximately 5 to 180 km/h (3 to 112 mph)*
Bicycles	*Approximately 5 to 80 km/h (3 to 50 mph)*	*Approximately 5 to 80 km/h (3 to 50 mph)*
Pedestrians	*Approximately 5 to 80 km/h (3 to 50 mph)*	*Approximately 5 to 80 km/h (3 to 50 mph)*
Preceding motorcycles, stopped motorcycles	*Approximately 5 to 80 km/h (3 to 50 mph)*	*Approximately 5 to 80 km/h (3 to 50 mph)*

While the frontal collision warning is operating, if the steering wheel is operated heavily or suddenly, the frontal collision warning may be canceled.

• *Brake assist system*

Detectable objects	***Vehicle speed***	***Relative speed between your vehicle and object***
Preceding vehicles, stopped vehicles	*Approximately 30 to 180 km/h (19 to 112 mph)*	*Approximately 10 to 180 km/h (6 to 112 mph)*
Bicycles	*Approximately 30 to 80 km/h (19 to 50 mph)*	*Approximately 30 to 80 km/h (19 to 50 mph)*
Pedestrians	*Approximately 30 to 80 km/h (19 to 50 mph)*	*Approximately 30 to 80 km/h (19 to 50 mph)*
Preceding motorcycles, stopped motorcycles	*Approximately 30 to 180 km/h (19 to 112 mph)*	*Approximately 10 to 80 km/h (6 to 50 mph)*

• *Automatic brake system*

For Australia, New Zealand, Hong Kong, Macao, Singapore, Taiwan and UAE model

Detectable objects	***Vehicle speed***	***Relative speed between your vehicle and object***
Preceding vehicles, stopped vehicles	*Approximately 5 to 180 km/h (3 to 112 mph)*	*Approximately 5 to 180 km/h (3 to 112 mph)*
Oncoming vehicles	*Approximately 30 to 180 km/h (19 to 112 mph)*	*Approximately 80 to 220 km/h (50 to 137 mph)*
Bicycles	*Approximately 5 to 80 km/h (3 to 50 mph)*	*Approximately 5 to 80 km/h (3 to 50 mph)*
Pedestrians	*Approximately 5 to 80 km/h (3 to 50 mph)*	*Approximately 5 to 80 km/h (3 to 50 mph)*
Preceding motorcycles, stopped motorcycles	*Approximately 5 to 180 km/h (3 to 112 mph)*	*Approximately 5 to 80 km/h (3 to 50 mph)*

Except for Australia, New Zealand, Hong Kong, Macao, Singapore, Taiwan and UAE model

Detectable objects	*Vehicle speed*	*Relative speed between your vehicle and object*
Preceding vehicles	*Approximately 5 to 180 km/h (3 to 112 mph)*	*Approximately 5 to 80 km/h (3 to 50 mph)*
Stopped vehicles	*Approximately 5 to 80 km/h (3 to 50 mph)*	–
Bicycles	*Approximately 5 to 80 km/h (3 to 50 mph)*	*Approximately 5 to 80 km/h (3 to 50 mph)*
Pedestrians	*Approximately 5 to 80 km/h (3 to 50 mph)*	*Approximately 5 to 80 km/h (3 to 50 mph)*
Preceding motorcycles, stopped motorcycles	*Approximately 5 to 80 km/h (3 to 50 mph)*	*Approximately 5 to 80 km/h (3 to 50 mph)*

If either of the following occur while the automatic brake system function is operating, it will be canceled:
- *The accelerator pedal is strongly depressed*
- *The steering wheel is operated heavily or suddenly*

- *Intersection collision avoidance support (left/right turn) (if equipped)*
  The intersection collision avoidance support (for left/right turning vehicles) will not operate when the turn signal lights are not flashing.

Detectable objects	***Vehicle speed***	***Oncoming vehicle speed***	***Relative speed between your vehicle and object***
Oncoming vehicles	*Approximately 5 to 40 km/h (3 to 25 mph)*	*Approximately 5 to 75 km/h (3 to 47 mph)*	*Approximately 10 to 115 km/h (6 to 71 mph)*
Pedestrians	*Approximately 5 to 30 km/h (3 to 19 mph)*	–	*Approximately 5 to 40 km/h (3 to 25 mph)*
Bicycles	*Approximately 5 to 30 km/h (3 to 19 mph)*	–	*Approximately 5 to 50 km/h (3 to 31 mph)*
Oncoming motorcycles	*Approximately 5 to 40 km/h (3 to 25 mph)*	*Approximately 5 to 75 km/h (3 to 47 mph)*	*Approximately 10 to 115 km/h (6 to 71 mph)*

- *Intersection collision avoidance support (crossing vehicles) (if equipped)*

Detectable objects	***Vehicle speed***	***Crossing vehicle speed***	***Relative speed between your vehicle and object***
Vehicles (side)	*Approximately 5 to 60 km/h (3 to 37 mph)*	• *Your vehicle speed or less* • *Approximately 40 km/h or less (25 mph or less)*	*Approximately 5 to 60 km/h (3 to 37 mph)*

NOTE:
Detection of detectable objects

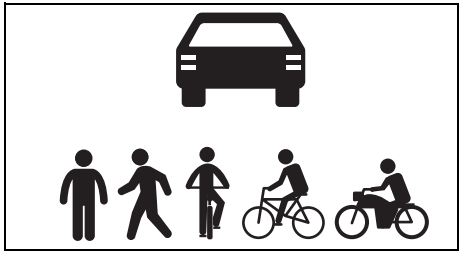

69TJ050080

Objects are detected based on their size, shape, and movement. Depending on the ambient brightness, movement, posture and direction of a detectable object, it may not be detected and the system may not operate properly. The system detects shapes, such as the following, as detectable objects.

Situations in which the system may operate even though the possibility of a collision is not high

- *In certain situations, such as the following, the system may determine that the possibility of a collision is high and operate:*
  - *When passing a detectable object*
  - *When changing lanes while overtaking a detectable object*
  - *When suddenly approaching a detectable object*
  - *When approaching a detectable object or other object on the roadside, such as guardrails, utility poles, trees, walls, etc.*

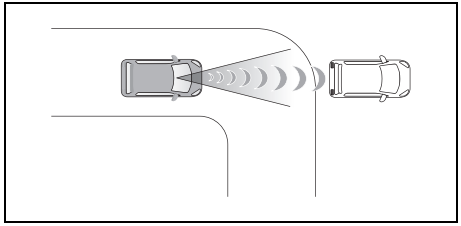

69TJ050090

  - *When there is a detectable object or other object by the roadside at the entrance of a curve*
  - *When there are patterns or a painting ahead of the vehicle that may be mistaken for a detectable object*

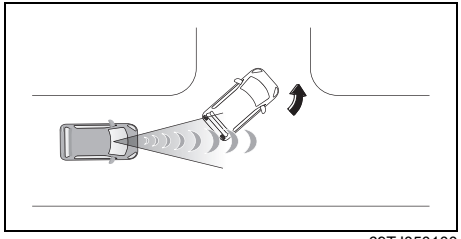

69TJ050100

  - *When passing a detectable object that is changing lanes or turning left/right*

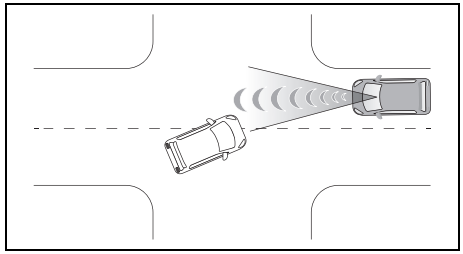

69T050110

  - *When passing a detectable object which is stopped to make a left/right turn*
  - *When a detectable object stops immediately before entering the path of the vehicle*

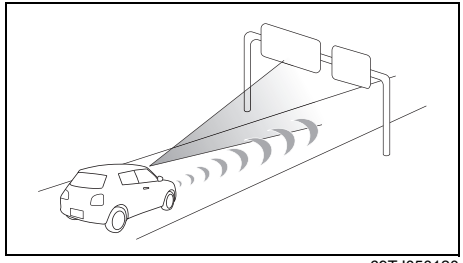

69TJ050120

  - *When passing through a location with a structure above the road (traffic sign, billboard, etc.)*
  - *When approaching an electric toll gate barrier, parking lot barrier, or other barrier that opens and closes*

– *When turning left/right and an oncoming vehicle, oncoming motorcycle, pedestrian or bicycle crosses in front of the vehicle*
– *When attempting to turn left/right in front of an oncoming vehicle, oncoming motorcycle, pedestrian or bicycle*
– *When turning left/right and an oncoming vehicle, oncoming motorcycle, pedestrian or bicycle stops immediately before entering the path of the vehicle*

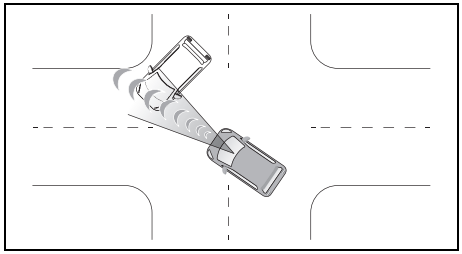

69T050130

– *When turning left/right and an oncoming vehicle turns left/right in front of the vehicle*
– *When the steering wheel is operated toward the path of an oncoming vehicle*

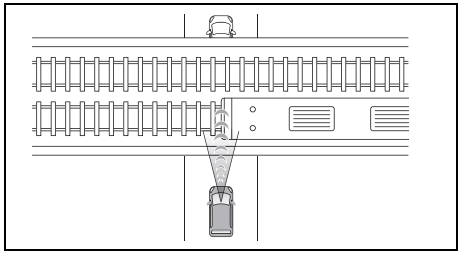

72U00252

– *When there is an object moving above/below the road.*

<u>Situations in which the system may not operate properly</u>

- *In certain situations, such as the following, a detectable object may not be detected by the front sensors, and the system may not operate properly:*
  – *When a detectable object is approaching your vehicle*
  – *When your vehicle or a detectable object is wandering*
  – *When a detectable object makes an abrupt maneuver (such as sudden swerving, acceleration or deceleration)*
  – *When suddenly approaching a detectable object*
  – *When the detectable object is near a wall, fence, guardrail, manhole cover, steel plate on the road surface, or another vehicle*
  – *When there is a structure above a detectable object*
  – *When part of a detectable object is hidden by another object (large luggage, umbrella, guardrail, etc.)*
  – *When multiple detectable objects are overlapping*
  – *When a bright light, such as the sun, is reflecting off of a detectable object*
  – *When a detectable object is white and looks extremely bright*
  – *When the color or brightness of a detectable object causes it to blend in with its surroundings*
  – *When a detectable object cuts in front of or suddenly emerges in front of your vehicle*
  – *When approaching a vehicle which is diagonal*
  – *If a vehicle ahead is a child sized bicycle, is carrying a large load, is carrying an extra passenger, or has an unusual shape (bicycles equipped with a child seat, tandem bicycles, etc.)*
  – *If a pedestrian or bicycle is shorter than approximately 1 m (3.3 ft.) or taller than approximately 2 m (6.6 ft.).*
  – *When the silhouette of a pedestrian or bicycle is unclear (such as when they are wearing a raincoat, long skirt, etc.)*
  – *When a pedestrian is bending forward or squatting*
  – *When a pedestrian or bicycle is moving at high speed*

– *When a pedestrian is pushing a stroller, wheelchair, bicycle or other vehicle*
– *When a detectable object blends in with the surrounding area, such as when it is dim (at dawn or dusk) or dark (at night or in a tunnel)*
– *When the vehicle has not been driven for a certain amount of time after the engine was started*
– *While turning left/right or a few seconds after turning left/right*
– *While driving around a curve and a few seconds after driving around a curve*
– *When turning left/right and an oncoming vehicle is driving in a lane 3 or more lanes from the vehicle*

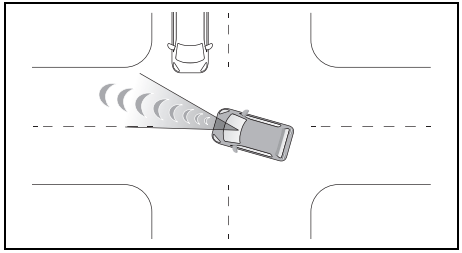

69T050140

– *When turning left/right and the direction of the vehicle differs greatly from the direction traffic flows in the oncoming lane*

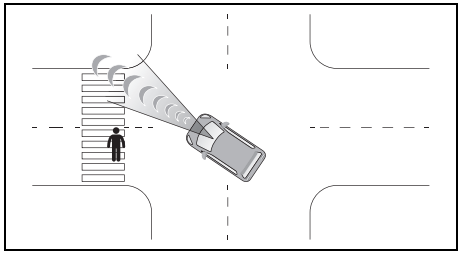

69T050150

– *When turning left/right and approaching a pedestrian who was traveling in the same direction as the vehicle and continues straight*
– *When a long vehicle such as a large vehicle or a towing vehicle approaches from the front at an intersection*

Dual Sensor Brake Support II (DSBS II) OFF switch

You can turn off the Dual Sensor Brake Support II (DSBS II).

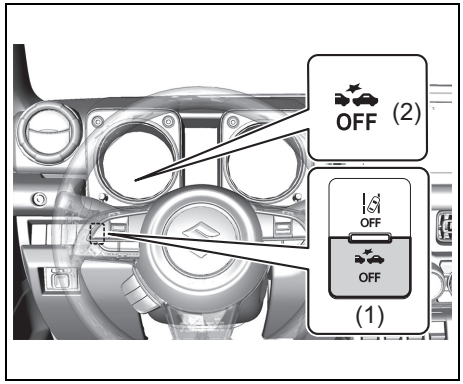

85U030090

- When you want to turn off the system, push and hold the Dual Sensor Brake Support II (DSBS II) OFF switch (1) until the interior buzzer beeps and the Dual Sensor Brake Support II (DSBS II) OFF indicator light (2) comes on.
- When you want to turn the system back on, push the Dual Sensor Brake Support II (DSBS II) OFF switch (1), the interior buzzer beeps and the Dual Sensor Brake Support II (DSBS II) OFF indicator light (2) goes off.
- Every time you turn off the engine, the system will turn back on and the Dual

Sensor Brake Support II (DSBS II) OFF indicator light (2) will go off.
- Every time you push the Dual Sensor Brake Support II (DSBS II) OFF switch (1), the interior buzzer will beep to inform you of the system's activation or deactivation.

Changing the Dual Sensor Brake Support II (DSBS II) setting

The Dual Sensor Brake Support II (DSBS II) setting can be changed through the information display setting mode*1. For details, refer to "Setting mode" in "BEFOR DRIVING" section. The system is enabled each time turn the ignition switch to "ON" position or the engine switch is pressed to change the ignition mode to ON.
- When the adaptive cruise control is operating, the frontal collision warning will operate at the [Earlier] timing, regardless of the user setting.

*1: The items you can change depend on the vehicle's specifications.

Lane departure prevention system (if equipped)

Basic functions

The lane departure prevention system warns the driver if the vehicle may deviate from the current lane or course*1, and also can slightly operate the steering wheel to help avoid deviation from the lane or course*1.
The front camera (DSBS II) is used to detect lane lines or a course*1.

*1: Boundary between the asphalt and grass, soil, etc., or structures, such as a curb, guardrail, etc.

Lane departure warning

When the system determines that the vehicle might depart from its lane or course*1, the lane departure prevention indicator light will blink and a warning buzzer will sound or the steering wheel will vibrate to alert the driver.

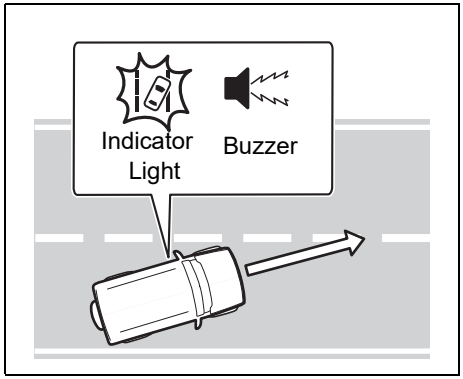

85U030060

Check the area around your vehicle and carefully operate the steering wheel to move the vehicle back to the center of the lane or course*1.

*1: Boundary between the asphalt and grass, soil, etc., or structures, such as a curb, guardrail, etc.

Lane departure prevention

If the system determines that the vehicle is likely to depart from its lane or course*1, it provides assistance through steering wheel operations to help avoid deviation from the lane or course.

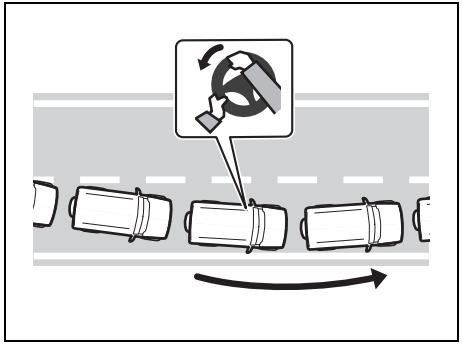

85U030070

If the system determines that the steering wheel has not been operated for a certain amount of time or the steering wheel is not being firmly gripped, a warning message may be displayed and a warning buzzer may sound to alert the driver.

*1: Boundary between the asphalt and grass, soil, etc., or structures, such as a curb, guardrail, etc.

Vehicle swaying warning

If the vehicle is swaying, a message will be displayed and a warning buzzer will sound to urge the driver to take a break.

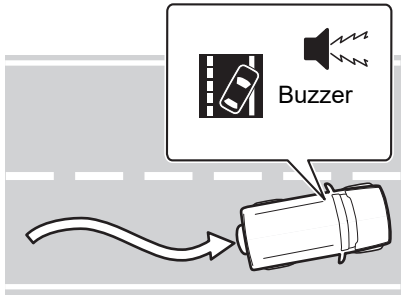

85U030080

"VEHICLE SWAYING DETECTED"

⚠ WARNING

Before using the lane departure prevention system

- **Do not overly rely on the lane departure prevention system. The lane departure prevention system is a system which provides automated assistance in driving. However, as it is not a system which reduces the amount of attention necessary for safe driving. The driver is solely responsible for paying attention to their surroundings and operating the steering wheel as necessary to ensure safety. Also, the driver is responsible for taking adequate breaks when fatigued, such as when driving for a long time.**
- **Failure to perform appropriate driving operations and pay careful attention may lead to an accident.**

NOTE:

Operating conditions of each function

- *Lane departure warning/prevention function*
  This function is operable when all of the following conditions are met:
  - *The vehicle speed is approximately 50 km/h (31 mph) or more.*
    Operation may be possible when the vehicle speed is approximately 40 km/h (25 mph) or more if vehicles, motorcycles, bicycles, or pedestrians are detected near the lane.
  - *The system recognizes a lane or course*2. (When recognized on only one side*2, the system will operate only for the recognized side.)*
  - *The lane width is approximately 3 m (9.8 ft.) or more. If the lane width is narrow, the lane departure warning and the lane departure prevention function may not work against line.*
  - *The turn signal control lever is not being operated.*
  - *The vehicle is not being driven around a sharp curve.*
  - *The vehicle is not accelerating or decelerating more than a certain amount.*
  - *The steering wheel is not being turned sufficiently to perform a lane change.*

**2: Boundary between the asphalt and grass, soil, etc., or structures, such as a curb, guardrail, etc.*

- *Vehicle swaying warning*
  This function is operable when all of the following conditions are met:
  - *The vehicle speed is approximately 50 km/h (31 mph) or more.*
  - *The lane width is approximately 3 m (9.8 ft.) or more.*

Temporary cancellation of functions

When the operating conditions are no longer met, a function may be temporarily canceled. However, when the operation conditions are met again, operation of the function will automatically be restored.

Operation of the lane departure warning function/lane departure prevention function

- *Depending on the vehicle speed, road conditions, lane departure angle, etc., operation of the lane departure prevention function may not be felt or the function may not operate.*
- *Depending on the conditions, the warning buzzer may operate even if vibration is selected through a customize setting.*
- *If a course*2 is not clear or straight, the lane departure warning function or lane departure prevention function may not operate.*
- *The lane departure warning function or lane departure prevention function may not operate if the system judges that the vehicle is intentionally being steered to avoid a pedestrian or parked vehicle.*
- *The steering assist operation of the lane departure prevention function can be overridden by the steering wheel operation of the driver.*

**2: Boundary between the asphalt and grass, soil, etc., or structures, such as a curb, guardrail, etc.*

Hands off steering wheel warning



69TJ040610

"KEEP CONTROL OF STEERING WHEEL"

In the following situations, a message urging the driver to operate the steering wheel and an image will be displayed and a buzzer will sound to warn the driver. When using the system, make sure to grip the steering wheel firmly, regardless of whether the warning is operating or not.

- *When the system determines that the driver is not securely holding the steering wheel, or the steering wheel is not being operated when the steering assist operation of the lane departure prevention function is operating.*
  The length of time that the warning buzzer operates will become longer as the frequency of the steering assist operating increases. Even if the system judges that the steering wheel has been operated, the warning buzzer will sound for a certain amount of time.

Vehicle swaying warning



69T040280

"VEHICLE SWAYING DETECTED"

If the vehicle is swaying, a message will be displayed and a warning buzzer will sound to urge the driver to take a break.

Depending on the condition of the vehicle and road surface, the vehicle swaying warning function may not operate.

Lane departure prevention OFF switch (if equipped)

You can turn off the lane departure prevention, lane departure warning and the vehicle swaying warning.

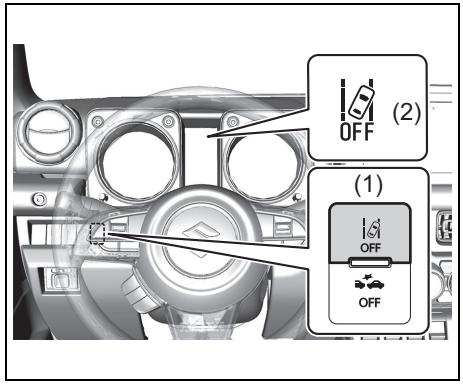

85U030100

- When you want to turn off the system, push and hold the lane departure prevention OFF switch (1) until the interior buzzer beeps and the lane departure prevention OFF indicator light (2) comes on.

Perform the following method to turn the system back on.

- Push the lane departure prevention OFF switch (1), the interior buzzer beeps and the lane departure prevention OFF indicator light (2) goes off.

⚠ WARNING

If you attempt to press the lane departure prevention OFF switch while driving, you could lose control of the vehicle.
Do not press the lane departure prevention OFF switch while driving.

Changing Lane Departure Prevention setting

The settings of the lane departure prevention can be changed through the information display setting mode. For details, refer to "Setting mode" in "BEFOR DRIVING" section.

⚠ WARNING

Situations in which the lane departure prevention should not be used

Refer to "When it is necessary to disable the system" (P.3-48) in this section and disable the system. Failure to do so may lead to an accident.

Situations in which the system may not operate properly

In the following situations, the system may not operate properly and the vehicle may depart from its lane. Do not overly rely on these functions. The driver is solely responsible for paying attention to their surroundings and operating the steering wheel as necessary to ensure safety.

- **When the boundary between the asphalt and grass, soil, etc., or structures, such as a curb, guardrail, etc. is not clear or straight**

(Continued)

⚠ WARNING

(Continued)

- **When the vehicle is struck by a crosswind or the turbulence of other nearby vehicles**
- **Situations in which the lane may not be detected: Refer to "Situations in which the lane may not be detected" (P.3-54) in this section.**
- **Situations in which the sensors may not operate properly: Refer to "Situations in which the front camera (DSBS II) and front radar (DSBS II) may not operate properly" (P.3-53) in this section.**
- **Situations in which some or all of the functions of the system cannot operate: Refer to "Situations in which some or all of the functions of the system cannot operate" (P.3-54) in this section.**

Displays and system operation

The operating state of the lane departure warning function and steering assist operation of the lane departure prevention function are indicated.

Indicator	Information display		Situation
	Lane	Steering	
 On (yellow)	Off	Off	System disabled
 On (white)	 On (white outline)	Off	Lane lines are not detected by the system
 On (white)	 On (white)	Off	Lane lines are detected by the system
 Blinks (yellow)	 Blinks (yellow)	Off	Lane departure warning function is operating for the side which the lane display is blinking

Indicator	Information display		Situation
	Lane	Steering	
 On (green)	 On (green)	 On (green)	Lane departure prevention function is operating for the side which the lane display is illuminated
 Blinks (yellow)	 Blinks (yellow)	 On (green)	Lane departure warning function/lane departure prevention function is operating for the side which the lane display is blinking
 On (yellow)	Off	Off	When turn the ignition switch to “ON” position or the engine switch is pressed to change the ignition mode to ON, this light comes on briefly so you can check that the light is working. If there is a problem in the lane departure prevention with the ignition switch is in the “ON” position or the engine switch in ON mode, this light will come on by yellow. Bring the vehicle to an authorized SUZUKI dealer or a qualified workshop to have the problem corrected.

High beam assist

The high beam assist uses a front camera (DSBS II) located on the upper portion of the windshield to detect the brightness of the lights of vehicles ahead, streetlights, etc., and automatically changes the head lights between the high beams and low beams.

⚠ WARNING

For safe use

Do not overly rely on the high beam assist. Drivers should always be aware of their surroundings at their own responsibility, drive safely, and manually switch between high beam and low beam as needed.

To prevent unintentional operation of the high beam assist System

When it is necessary to disable the system: Refer to "When it is necessary to disable the system" (P.3-48) in this section.

Using the high beam assist system

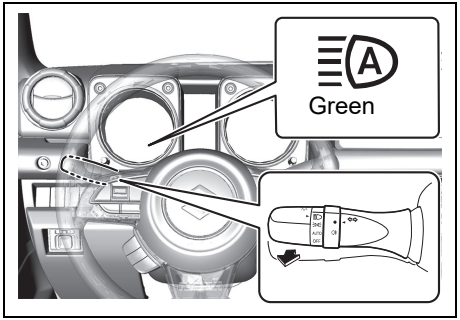

85U030110

- Set the lighting switch is set to the "AUTO" position when the ignition switch to "ON" position or the engine switch is in ON mode, the high beam assist indicator light (green) illuminate when the headlights come on automatically.
- To disable the high beam assist, pull the lever toward you or change the lever position or lighting switch to other than the above. The high beam assist indicator light (green) will go off.

NOTE:

Automatic operating conditions of the high beams

- *When all of the following conditions are met, the high beams will illuminate automatically:*
  - *The vehicle speed is more than about 30 km/h (19 mph)*
  - *The area ahead of the vehicle is dark.*
  - *There are no vehicles ahead with lights on.*
  - *There are few streetlights or other lights on the road ahead.*
- *If any of the following conditions are met, the headlights will change to the low beams:*
  - *The vehicle speed drops below about 25 km/h (16 mph)*
  - *The area ahead of the vehicle is not dark.*
  - *There is a vehicle ahead with lights on.*
  - *There are many streetlights or other lights on the road ahead.*

Front Camera (DSBS II) detection

- *In the following situations, the high beams may not be automatically changed to the low beams:*
  - *When a vehicle cuts in front of your vehicle*

– *When another vehicle crosses in front of the vehicle*
– *When vehicles ahead are repeatedly detected and then hidden due to repeated curves, road dividers or roadside trees*
– *When a vehicle ahead approaches from a far lane*
– *When a vehicle ahead is far away*
– *When a vehicle ahead has no lights*
– *When the lights of a vehicle ahead are dim*
– *When a vehicle ahead is reflecting strong light, such as own headlights*
– *Situations in which the sensors may not operate properly: Refer to "Situations in which the front camera (DSBS II) and front radar (DSBS II) may not operate properly" (P.3-53) in this section.*

- *The headlights may change to the low beams if a vehicle ahead that is using fog lights without its headlights turned on is detected.*
- *House lights, street lights, traffic signals, and illuminated billboards or signs may cause the high beams to change to the low beams, or the low beams to remain on.*
- *The following may change the timing at which the headlights change to the low beams:*
  – *The brightness of lights of vehicles ahead*
  – *The movement and direction of vehicles ahead*
  – *The distance between the vehicle and a vehicle ahead*
  – *When a vehicle ahead only has lights illuminated on one side*
  – *When a vehicle ahead is a two-wheeled vehicle*
  – *The condition of the road (gradient, curve, condition of the road surface, etc.)*
  – *The number of passengers and amount of luggage*
- *The headlights may change between the high beams and low beams unexpectedly.*
- *Bicycles and other small vehicles may not be detected.*
- *In the following situations, the system may not be able to correctly detect the brightness of the surroundings. This may cause the low beams to remain on or the high beams to flash or dazzle pedestrians or vehicles ahead. In such a case, it is necessary to manually change between the high beams and low beams.*
  – *When there are lights similar to headlights or tail lights in the surrounding area*
  – *When headlights or tail lights of vehicles ahead are turned off, dirty, changing color, or not aimed properly*
  – *When the headlights are repeatedly changing between the high beams and low beams.*
  – *When use of the high beams is inappropriate or when the high beams may be flashing or dazzling pedestrians or other drivers.*
  – *When the vehicle is used in an area in which vehicles travel on the opposite side of the road of the country for which the vehicle was designed, for example using a vehicle designed for right-hand traffic in a left-hand traffic area, or vice versa*
  – *When it is necessary to disable the system: Refer to "When it is necessary to disable the system" (P.3-48) in this section.*
  – *Situations in which the sensors may not operate properly: Refer to "Situations in which the front camera (DSBS II) and front radar (DSBS II) may not operate properly" (P.3-53) in this section.*

Changing high beam assist setting

The settings of the high beam assist can be changed through the information display setting mode. For details, refer to "Setting mode" in "BEFOR DRIVING" section.

Turning the high beams on/off manually

• Changing to the high beams

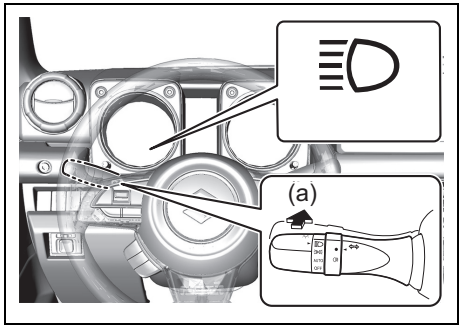

85U030120

- Push the lever forward the vehicle as shown in the illustration (a) to change to the high beams.
- To return to high beam assist, return the lever to its original position again.

• Changing to the low beams

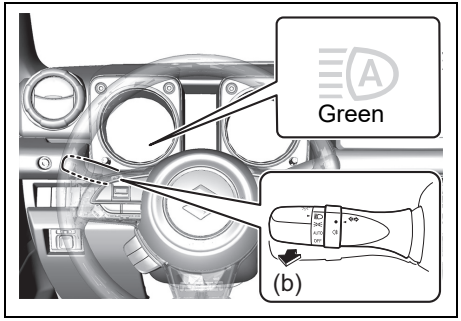

85U030130

- Set the lighting switch to other than “AUTO” position or pull the lighting control lever toward you as shown in the illustration (b), the high beam assist indicator light (green) will turn off.
- To return to high beam assist, pull the lever toward you again or set the lighting switch to the “AUTO” position.

Display function

(For European countries)
When the front camera (DSBS II) detects a traffic sign or information of a sign is available from the navigation system, the sign will be displayed on the information display.

- Multiple signs can be displayed.
  Depending on the display status of the information display, the number of displayed signs may be limited.

(Except for European countries)
When the front camera (DSBS II) detects a sign, the sign will be displayed on the information display.

NOTE:
Operating conditions of display function

Signs will be displayed on the information display when the following conditions are met:

- *The system has detected a sign*

In the following situations, a displayed sign may stop being displayed:

- *When a new sign has not been detected for a certain distance*
- *When the system determines that the road being driven on has changed, such as after a left or right turn*

Adaptive cruise control (if equipped)

This adaptive cruise control uses front radar (DSBS II) and front camera (DSBS II) to detect the presence of vehicles ahead, determines the current vehicle-to-vehicle distance, and operates to maintain a suitable distance from the vehicle ahead. The desired vehicle-to-vehicle distance can be set by operating the following distance setting switch.
Use the adaptive cruise control only on highways and expressways.

⚠ WARNING

For safe use

- **Driving safely is solely the responsibility of the driver. Do not overly rely on this system, and pay careful attention to the surrounding conditions in order to ensure safe driving.**

(Continued)

⚠ WARNING

(Continued)

- **The adaptive cruise control provides driving assistance to reduce the driver's burden. However, there are limitations to the assistance provided.**
  Read the following items carefully. Do not overly rely on this system and always drive carefully.
  – Conditions under which the system may not operate correctly: Refer to "Conditions under which the system may not operate correctly" (P.3-87) in this section.
- **Set the speed appropriately according to the speed limit, traffic flow, road conditions, weather conditions, etc. The driver is responsible for confirming the set speed.**
- **Even if the system is operating correctly, the condition of a preceding vehicle as recognized by the driver and detected by the system may differ. Therefore, it is necessary for the driver to pay attention, assess risks, and ensure safety. Over-reliance on this system to drive the vehicle safely may lead to an accident resulting in death or serious injury.**

(Continued)

⚠ WARNING

(Continued)

Precautions for the driving assist systems

Observe the following precautions, as there are limitations to the assistance provided by the system. Over-reliance on this system may lead to an accident resulting in death or serious injury.

- **For support for the driver's vision:**
  The adaptive cruise control is only intended to help the driver in determining the distance between the driver's own vehicle and a designated preceding vehicle. It is not a system which allows for careless or inattentive driving, and is not a system which assists in poor visibility conditions.
  The driver must pay attention to their surroundings.

(Continued)

⚠ WARNING

(Continued)

- **For support for the driver's judgment:**
  The adaptive cruise control determines whether the distance between the driver's own vehicle and a designated preceding vehicle is within a set range. It is not capable of making any other type of judgment. Therefore, it is absolutely necessary for the driver to remain vigilant and to determine whether or not there is a possibility of danger.
- **For support for the driver's operation:**
  The adaptive cruise control does not include functions which will prevent or avoid collisions with vehicles ahead of your vehicle. Therefore, if there is ever any possibility of danger, the driver must take immediate and direct control of the vehicle and act appropriately in order to ensure safety.

(Continued)

⚠ WARNING

(Continued)

<u>Situations in which the adaptive cruise control should not be used</u>

Do not use the adaptive cruise control in the following situations. As the system will not be able to provide appropriate control, using it may lead to an accident resulting in death or serious injury.

- **When driving on a road with a mix of pedestrians, bicycles, etc.**
- **When driving on a highway or expressway entrance or exit**
- **When the approach warning sounds frequently**
- **When vehicle is driven on steep hill**

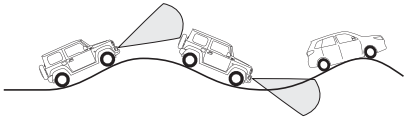

85U050060

- **When vehicle is driven on the road with many steep uphills and downhills**

(Continued)

⚠ WARNING

(Continued)

- **Situations in which the sensors may not operate properly: Refer to "Situations in which the front camera (DSBS II) and front radar (DSBS II) may not operate properly" (P.3-53) in this section.**
- **When it is necessary to disable the system: Refer to "When it is necessary to disable the system" (P.3-48) in this section.**
- **A busy road or one that involves frequent acceleration and deceleration. The system could not keep your vehicle at an appropriate speed for traffic conditions.**
- **On a slippery road such as ice or snow-covered road. The tyres may turn over and you may lose control of the vehicle.**
- **When your vehicle is towed or your vehicle is towing another vehicle**
- **When the vehicle cannot move in a straight manner without consistently steering, due to an accident or breakdown**

NOTE:
When the adaptive cruise control is operating, there may be a noise caused by the brake application, which is not abnormal.

Basic functions

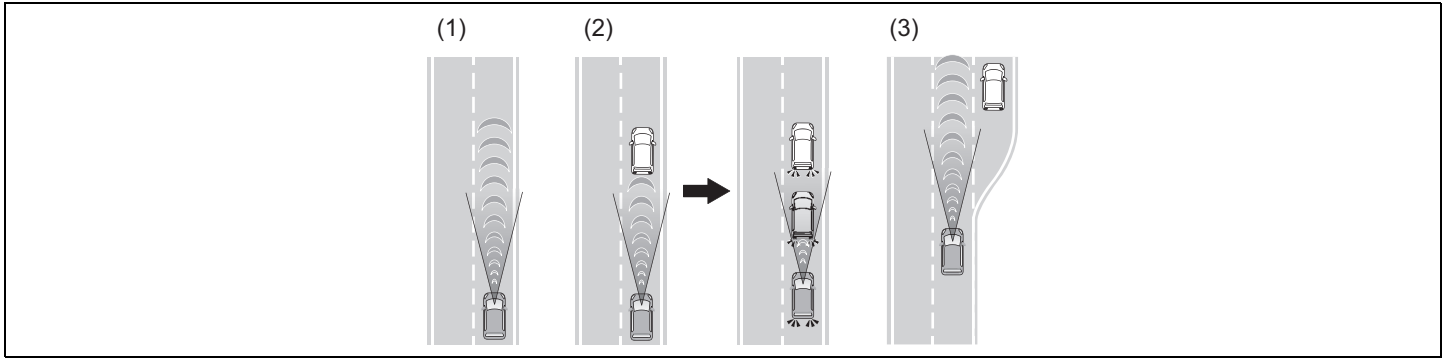

69T050480

(1) Constant speed cruising:
When there are no vehicles ahead
The vehicle drives at the speed set by the driver.
If the set vehicle speed is exceeded while driving down a hill, a message such as the following will appear.

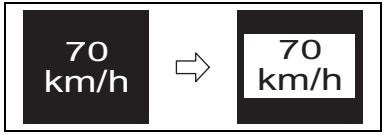

69T050960

(2) Deceleration and follow-up cruising
When a preceding vehicle driving slower than the set vehicle speed is detected
When a vehicle is detected driving ahead of your vehicle, the vehicle automatically decelerates and if a greater reduction in vehicle speed is necessary, the brakes are applied (the stop lights will come on at this time). The vehicle is controlled to maintain the vehicle-to-vehicle distance set by the driver, in accordance with changes in the speed of the preceding vehicle. If vehicle deceleration is not sufficient and the vehicle approaches the vehicle ahead, the approach warning will sound.

(3) Acceleration
When there are no longer any preceding vehicles driving slower than the set vehicle speed
The vehicle accelerates until the set vehicle speed is reached and then resumes constant speed cruising.

System components

• Meter display

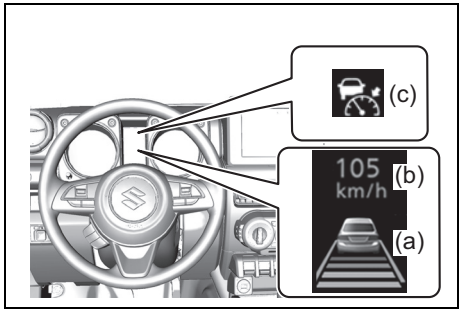

85U030140

(a) Information display
(b) Set vehicle speed
(c) Adaptive cruise control indicator

• Switches

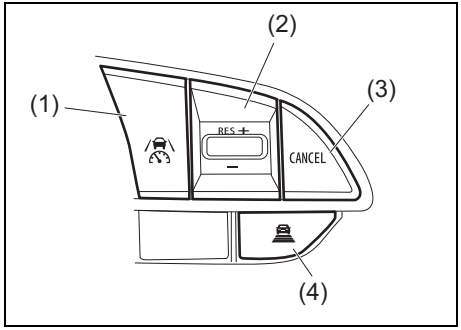

85U050070

(1) Driving assist switch
(2) “RES +” / “–” switch
(3) “CANCEL” switch
(4) Following distance setting switch

Using the adaptive cruise control

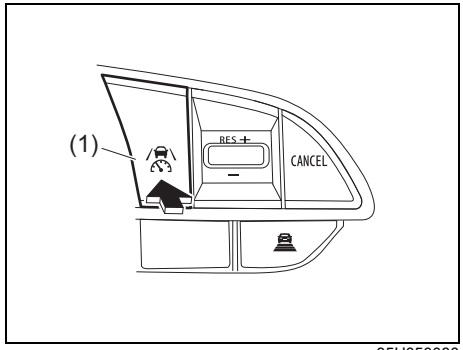

85U050080

1) Using the accelerator pedal, accelerate or decelerate to the desired vehicle speed (approximately 30 km/h (19 mph) or more), and press the driving assist switch (1) to set the set vehicle speed.

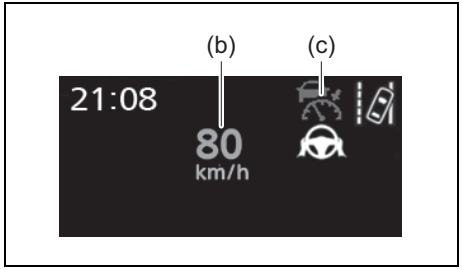

85U030160

The adaptive cruise control indicator (c) will change from illuminated in white to green. The set vehicle speed (b) will be displayed on the information display (a) in green. If the vehicle speed is set while driving at below approximately 30 km/h (19 mph), the set vehicle speed will be set to approximately 30 km/h (19 mph).

Adjusting the set vehicle speed

• Adjusting the set vehicle speed using the switches

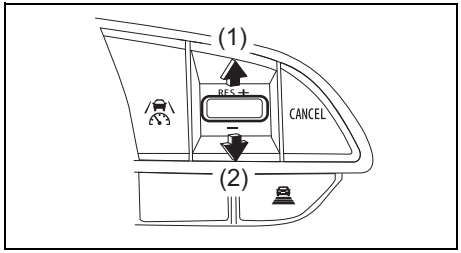

85U050090

(1) Increase set vehicle speed
(2) Decrease set vehicle speed

Short press adjustment:
Press the switch
Long press adjustment:
Press and hold the switch until the desired set vehicle speed is reached.

The set vehicle speed will increase or decrease as follows:

- Short press adjustment:
  By 1 km/h (0.6 mph) or 1 mph (1.6 km/h) each time the switch is pressed.
- Long press adjustment:
  Increases or decreases in 5 km/h (3.1 mph) or 5 mph (8 km/h) increments continuously while the switch is pressed and held.

The set vehicle speed adjustment increment can be changed through a customize setting. Refer to “Setting mode” in “BEFORE DRIVING” section.

• Increasing the set vehicle speed using the accelerator pedal

1) To increase the set speed, accelerate to the desired speed using the accelerator pedal.
2) Pull up the “RES +” / “–” switch to “RES +” position.
   The new speed will be maintained.

Canceling/resuming control

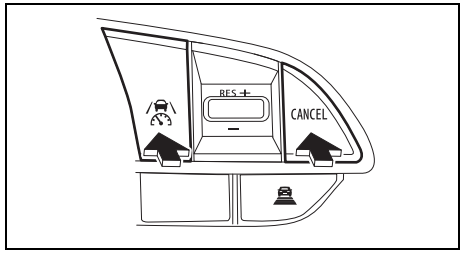

85U050100

1) Press “CANCEL” switch or driving assist switch to cancel control.
   Control will also be canceled if the brake pedal is depressed.
2) Pull up the “RES +” / “–” switch to “RES +” position or press driving assist switch to resume control.

Changing the vehicle-to-vehicle distance

- Each time the switch is pressed, the vehicle-to-vehicle distance setting will change as follows:
  If a preceding vehicle is detected, the preceding vehicle mark (A) will be displayed.

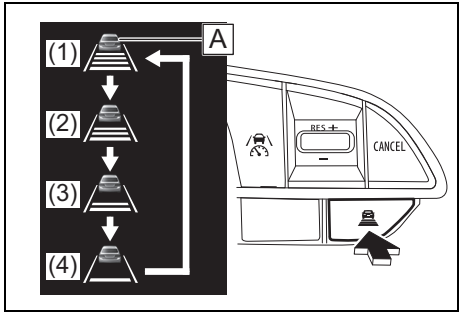

85U050110

Vehicle-to-vehicle distance		Approximate Distance (Vehicle Speed: 100 km/h [62 mph])
(1)	Long	Approximately 70 m (230 ft)
(2)	Medium	Approximately 60 m (197 ft)
(3)	Short	Approximately 45 m (148 ft)
(4)	Shortest	Approximately 30 m (98 ft)

NOTE:

Operating conditions

- *The gear position is in 3rd,4th or 5th.*
- *The desired set speed can be set when the vehicle speed is approximately 30 km/h (19 mph) or more.*

Accelerating after setting the vehicle speed

As with normal driving, acceleration can be performed by depressing the accelerator pedal. After accelerating, the vehicle will return to the set vehicle speed. However, when your vehicle is following another vehicle, the vehicle speed may decrease to below the set vehicle speed in order to maintain the distance from the preceding vehicle.

Automatic cancellation of adaptive cruise control.

In the following situations, the adaptive cruise control will be canceled automatically:

- *When the vehicle speed is approximately 30 km/h (19 mph) or less*
- *When the brake control or output restriction control of SUZUKI SAFETY SUPPORT operates (For example: Dual Sensor Brake Support II (DSBS II)*
- *When the parking brake has been operated*
- *Situations in which some or all of the functions of the system cannot operate: Refer to "Situations in which some or all of the functions of the system cannot operate" (P.3-54) in this section.*

Adaptive cruise control warning messages and buzzers

– *For safe use: Refer to "For safe use" (P.3-48) in this section.*

Preceding vehicles that the sensor may not detect correctly

In the following situations, depending on the conditions, if the system cannot provide sufficient deceleration or acceleration is necessary, operate the brake pedal or accelerator pedal.
As the sensor may not be able to correctly detect these types of vehicles, the approach warning may not operate.
Refer to "Approach warning" (P.3-87) in this section.
- *When a vehicle cuts in front of your vehicle or changes lanes away from your vehicle extremely slowly or quickly*
- *When changing lanes*
- *When a preceding vehicle is driving at a low speed*
- *When a vehicle is stopped in the same lane as the vehicle*
- *When a motorcycle is traveling in the same lane as the vehicle*

Conditions under which the system may not operate correctly

In the following situations, operate the brake pedal (or accelerator pedal, depending on the situation) as necessary.
As the sensor may not be able to correctly detect a vehicle, the system may not operate properly.
- *When a preceding vehicle brakes suddenly*
- *When changing lanes at low speeds, such as in a traffic jam*

Approach warning

In situations where the vehicle approaches a preceding vehicle and the system cannot provide sufficient deceleration, such as if a vehicle cuts in front of the vehicle, a warning display will flash and a buzzer will sound to alert the driver. Depress the brake pedal to ensure appropriate vehicle-to-vehicle distance.

• Warnings may not occur when
In the following situations, the warning may not operate even though the vehicle- to-vehicle distance is short.
- When the preceding vehicle is traveling at the same speed or faster than your vehicle
- When the preceding vehicle is traveling at an extremely low speed
- Immediately after the vehicle speed has been set
- When the accelerator pedal is depressed

Curve speed reduction function

When a curve is detected, the vehicle speed will begin being reduced. When the curve ends, the vehicle speed reduction will end.
Depending on the situation, the vehicle speed will then return to the set vehicle speed.
In situations where vehicle-to-vehicle distance control needs to operate, such as when a preceding vehicle cuts in front of your vehicle, the curve speed reduction function will be canceled.

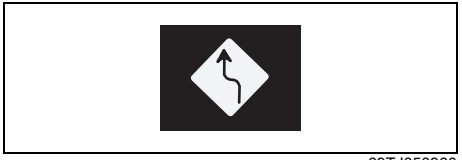

69TJ050960

NOTE:
Situations in which the curve speed reduction function may not operate

In situations such as the following, the curve speed reduction function may not operate:
- *When the vehicle is being driven around a gentle curve*
- *When the accelerator pedal is being depressed*
- *When the vehicle is being driven around an extremely short curve*

Changing the settings of the curve speed reduction function

Various settings of the curve speed reduction function can be changed through customize settings. Refer to "Setting mode" in "BEFORE DRIVING" section.

Support for lane change

If your vehicle is being driven at approximately 80 km/h (50 mph) or more and a lane change to the passing lane is per-

formed, when the turn signal control lever is operated for lane changing, the vehicle will accelerate up to the set speed to assist in overtaking.
If your vehicle is being driven at approximately 80 km/h (50 mph) or more and the lane is changed to that with a vehicle traveling slower than your vehicle, when the turn signal control lever is operated the vehicle will gradually decelerate to assist in changing lanes.

Adaptive cruise control with traffic sign recognition (if equipped)

When traffic sign recognition function is enabled and the adaptive cruise control is operating, if a speed limit sign is detected, the detected speed limit will be displayed with an up/down arrow. The set speed can be increased/reduced to the detected speed limit by pressing and holding the "RES +" switch or "–" switch.

• When the set speed is lower than the detected speed limit

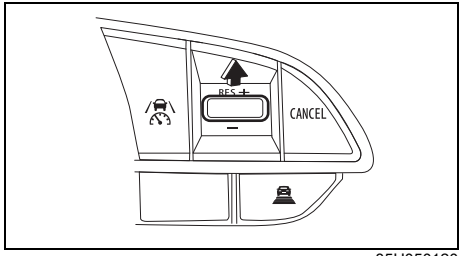

85U050120

Press and hold the "RES +" switch when the UP arrow is indicated in the information display.

• When the set speed is higher than the detected speed limit

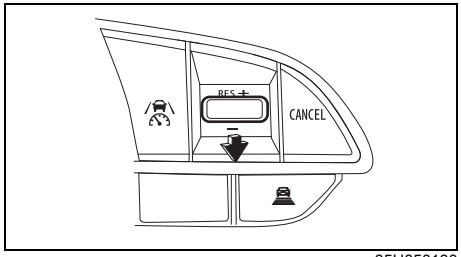

85U050130

Press and hold the "–" switch when the DOWN arrow is indicated in the information display.

• Enabling/disabling the adaptive cruise control with traffic sign recognition

The adaptive cruise control with traffic sign recognition can be enabled/disabled through a customize setting. Refer to "Setting mode" in "BEFORE DRIVING" section.

NOTE:
<u>The adaptive cruise control with traffic sign recognition may not operate properly when</u>

As the adaptive cruise control with traffic sign recognition may not operate properly in situations where the traffic sign recognition may not operate or cannot detect signs correctly, when using this function, make sure to confirm the actual speed limit.
In the following situations, the set speed may not change to the detected speed limit by pressing and holding the "RES +" switch or "–" switch:
- *When speed limit information is not available*
- *When the detected speed limit is the same as the set speed*
- *When the detected speed limit is outside of the speed range which the adaptive cruise control can operate*

Changing Adaptive cruise control settings

The settings of the adaptive cruise control can be changed through customize settings. Refer to "Setting mode" in "BEFORE DRIVING" section.

Warning and indicator messages

The information display shows the warning and indicator messages to let you know about certain problems of the adaptive cruise control.

When adaptive cruise control cannot be set

Indicator	Message	Master warning indicator light	Sound	Cause and remedy
 69T050860	"ACC SYSTEM UNAVAILABLE TURN ON ESP SYSTEM"	Off	Beeps at short intervals (from interior buzzer)	Adaptive cruise control cannot be set because ESP® is OFF. Set ESP® to ON.
 69T050860	"ACC SYSTEM UNAVAILABLE"	Off	Beeps at short intervals (from interior buzzer)	Adaptive cruise control cannot be set except for the above causes. Ensure operating conditions and try again.

Displays and system operation

The operating state of the adaptive cruise control is indicate.

Indicator light	Set vehicle speed	Vehicle-to-vehicle distance setting	Preceding vehicle mark	Situation
 On (white)	 Off / On (white)	 On (white)	Off	Adaptive cruise control is on standby
 On (green)	 On (green)	 On (blue)	Off	Constant speed cruising / acceleration
 On (green)	 On (green)	 On (blue)	 On	Deceleration / follow-up cruising
 On (green)	 On (white)	 On (white)	 On (gray)	Stop control is in progress / accelerating by operating the accelerator pedal
 On (green)	 On (green)	 Blinks (yellow)	 Blinks (yellow)	Approach warning is operating

Indicator light	Set vehicle speed	Vehicle-to-vehicle distance setting	Preceding vehicle mark	Situation
 On (yellow)	 Off / On (white)	Off	Off	Adaptive cruise control system is temporarily stopped
 On (yellow)	Off	Off	Off	There is a malfunction in the adaptive cruise control system

Adaptive cruise control (with following function for all speeds) (if equipped)

This adaptive cruise control uses front radar (DSBS II) and front camera (DSBS II) to detect the presence of vehicles ahead, determines the current vehicle-to-vehicle distance, and operates to maintain a suitable distance from the vehicle ahead. The desired vehicle-to-vehicle distance can be set by operating the following distance setting switch

Use the adaptive cruise control only on highways and expressways.

⚠ WARNING

For safe use

- **Driving safely is solely the responsibility of the driver. Do not overly rely on this system, and pay careful attention to the surrounding conditions in order to ensure safe driving.**

(Continued)

⚠ WARNING

(Continued)

- **The adaptive cruise control provides driving assistance to reduce the driver's burden. However, there are limitations to the assistance provided.**
  Read the following items carefully. Do not overly rely on this system and always drive carefully.
  – Conditions under which the system may not operate correctly: Refer to "Conditions under which the system may not operate correctly" (P.3-99) in this section.
- **Set the speed appropriately according to the speed limit, traffic flow, road conditions, weather conditions, etc. The driver is responsible for confirming the set speed.**
- **Even if the system is operating correctly, the condition of a preceding vehicle as recognized by the driver and detected by the system may differ. Therefore, it is necessary for the driver to pay attention, assess risks, and ensure safety. Over-reliance on this system to drive the vehicle safely may lead to an accident resulting in death or serious injury.**

(Continued)

⚠ WARNING

(Continued)

Precautions for the driving assist systems

Observe the following precautions, as there are limitations to the assistance provided by the system. Over-reliance on this system may lead to an accident resulting in death or serious injury.

- **For support for the driver's vision:**
  The adaptive cruise control is only intended to help the driver in determining the distance between the driver's own vehicle and a designated preceding vehicle. It is not a system which allows for careless or inattentive driving, and is not a system which assists in poor visibility conditions.
  The driver must pay attention to their surroundings.

(Continued)

⚠ WARNING

(Continued)

- **For support for the driver's judgment:**
  The adaptive cruise control determines whether the distance between the driver's own vehicle and a designated preceding vehicle is within a set range. It is not capable of making any other type of judgment. Therefore, it is absolutely necessary for the driver to remain vigilant and to determine whether or not there is a possibility of danger.
- **For support for the driver's operation:**
  The adaptive cruise control does not include functions which will prevent or avoid collisions with vehicles ahead of your vehicle. Therefore, if there is ever any possibility of danger, the driver must take immediate and direct control of the vehicle and act appropriately in order to ensure safety.

(Continued)

⚠ WARNING

(Continued)

<u>Situations in which the adaptive cruise control should not be used</u>

Do not use the adaptive cruise control in the following situations. As the system will not be able to provide appropriate control, using it may lead to an accident resulting in death or serious injury.

- **When driving on a road with a mix of pedestrians, bicycles, etc.**
- **When driving on a highway or expressway entrance or exit**
- **When the approach warning sounds frequently**
- **When vehicle is driven on steep hill**

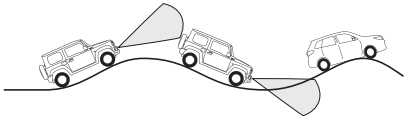

85U050060

- **When vehicle is driven on the road with many steep uphills and downhills**

(Continued)

⚠ WARNING

(Continued)

- **Situations in which the sensors may not operate properly: Refer to "Situations in which the front camera (DSBS II) and front radar (DSBS II) may not operate properly" (P.3-53) in this section.**
- **When it is necessary to disable the system: Refer to "When it is necessary to disable the system" (P.3-48) in this section.**
- **A busy road or one that involves frequent acceleration and deceleration. The system could not keep your vehicle at an appropriate speed for traffic conditions.**
- **On a slippery road such as ice or snow-covered road. The tyres may turn over and you may lose control of the vehicle.**
- **When your vehicle is towed or your vehicle is towing another vehicle**
- **When the vehicle cannot move in a straight manner without consistently steering, due to an accident or breakdown**

NOTE:
When the adaptive cruise control is operating, there may be a noise caused by the brake application, which is not abnormal.

Basic functions

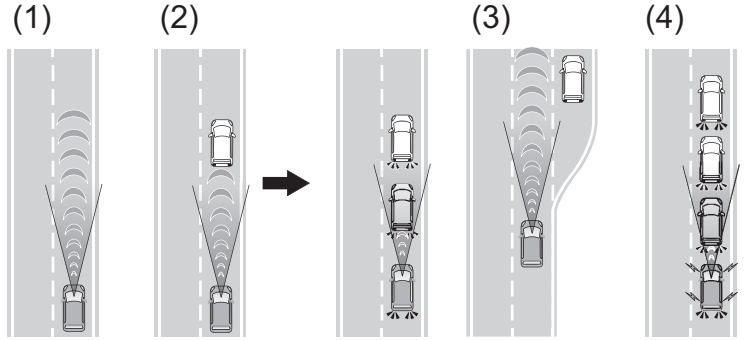

69T050490

(1) Constant speed cruising:
When there are no vehicles ahead
The vehicle drives at the speed set by the driver.
If the set vehicle speed is exceeded while driving down a hill, a message such as the following will appear.

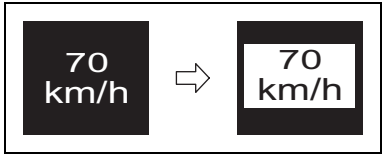

69T050960

(2) Deceleration and follow-up cruising
When a preceding vehicle driving slower than the set vehicle speed is detected
When a vehicle is detected driving ahead of your vehicle, the vehicle automatically decelerates and if a greater reduction in vehicle speed is necessary, the brakes are applied (the stop lights will come on at this time). The vehicle is controlled to maintain the vehicle-to-vehicle distance set by the driver, in accordance with changes in the speed of the preceding vehicle. If vehicle deceleration is not sufficient and the vehicle approaches the vehicle ahead, the approach warning will sound.
(3) Acceleration
When there are no longer any preceding vehicles driving slower than the set vehicle speed
The vehicle accelerates until the set vehicle speed is reached and then resumes constant speed cruising.
(4) Stop the vehicle following a preceding vehicle:
If a preceding vehicle stops, the vehicle will also stop. However, it does not have a function to maintain a stopped state, so apply the brakes immediately after stopping the vehicle.

System components

• Meter display

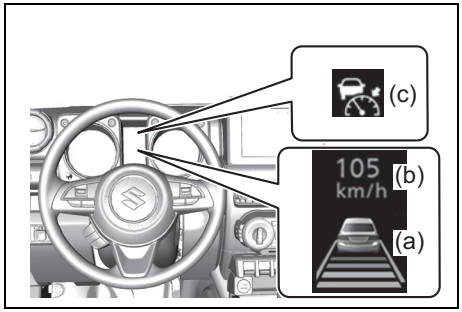

85U030140

(a) Information display
(b) Set vehicle speed
(c) Adaptive cruise control indicator

• Switches

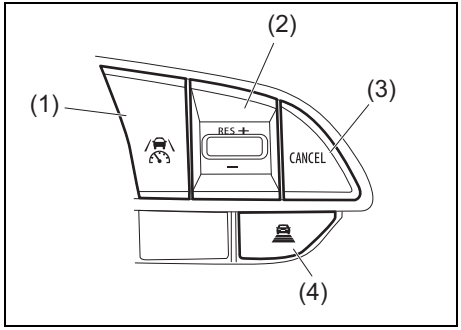

85U050070

(1) Driving assist switch
(2) “RES +” / “–” switch
(3) “CANCEL” switch
(4) Following distance setting switch

Using the adaptive cruise control

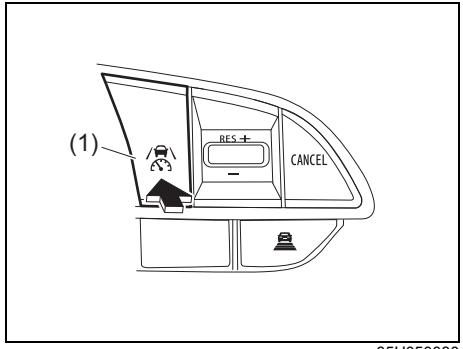

85U050080

1) Using the accelerator pedal, accelerate or decelerate to the desired vehicle speed (approximately 30 km/h (19 mph) or more), and press the driving assist switch (1) to set the set vehicle speed.

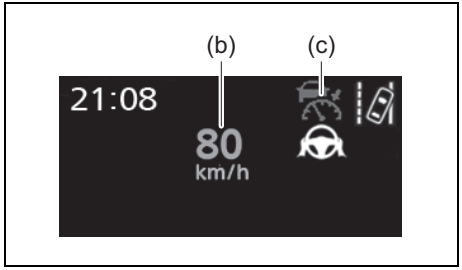

85U030160

The adaptive cruise control indicator (c) will change from illuminated in white to green. The set vehicle speed (b) will be displayed on the information display (a) in green. If the vehicle speed is set while driving at below approximately 30 km/h (19 mph), the set vehicle speed will be set to approximately 30 km/h (19 mph).

Adjusting the set vehicle speed

• Adjusting the set vehicle speed using the switches

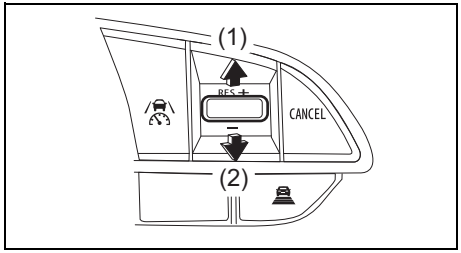

85U050090

(1) Increase set vehicle speed
(2) Decrease set vehicle speed

Short press adjustment:
Press the switch
Long press adjustment:
Press and hold the switch until the desired set vehicle speed is reached.

The set vehicle speed will increase or decrease as follows:

- Short press adjustment:
  By 1 km/h (0.6 mph) or 1 mph (1.6 km/h) each time the switch is pressed.
- Long press adjustment: Increases or decreases in 5 km/h (3.1 mph) or 5 mph (8 km/h) increments continuously while the switch is pressed and held.

The set vehicle speed adjustment increment can be changed through a customize setting. Refer to “Setting mode” in “BEFORE DRIVING section”.

• Increasing the set vehicle speed using the accelerator pedal

1) To increase the set speed, accelerate to the desired speed using the accelerator pedal.
2) Pull up the “RES +” / “–” switch to “RES +” position.
   The new speed will be maintained.

Canceling/resuming control

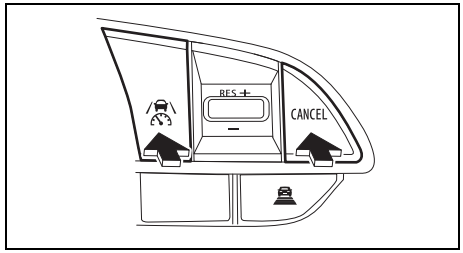

85U050100

1) Press “CANCEL” switch or driving assist switch to cancel control.
   Control will also be canceled if the brake pedal is depressed.
2) Pull up the “RES +” / “–” switch to “RES +” position or press driving assist switch to resume control.

Changing the vehicle-to-vehicle distance

- Each time the switch is pressed, the vehicle-to-vehicle distance setting will change as follows:
  If a preceding vehicle is detected, the preceding vehicle mark (A) will be displayed.

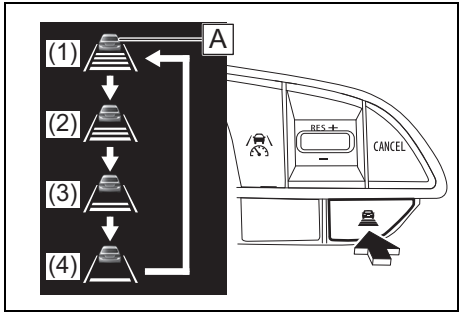

85U050110

Vehicle-to-vehicle distance		Approximate Distance (Vehicle Speed: 100 km/h [62 mph])
(1)	Long	Approximately 70 m (230 ft)
(2)	Medium	Approximately 60 m (197 ft)
(3)	Short	Approximately 45 m (148 ft)
(4)	Shortest	Approximately 30 m (98 ft)

NOTE:

Operating conditions

- *The gearshift lever is in "D".*
- *The desired set speed can be set when the vehicle speed is approximately 30 km/h (19 mph) or more.*
  (If the vehicle speed is set while driving at below approximately 30 km/h [19 mph], the set speed will be set to approximately 30 km/h [19 mph].)

Accelerating after setting the vehicle speed

As with normal driving, acceleration can be performed by depressing the accelerator pedal. After accelerating, the vehicle will return to the set vehicle speed. However, while in vehicle-to-vehicle distance control mode, the vehicle speed may decrease to below the set vehicle speed in order to maintain the distance from the preceding vehicle.

Automatic cancellation of adaptive cruise control (with following function for all speed)

In the following situations, the adaptive cruise control will be canceled automatically:

- *When the vehicle is stopped*
- *When the brake control or output restriction control of SUZUKI SAFETY SUPPORT operates (For example: Dual Sensor Brake Support II (DSBS II)*

- *When the parking brake has been operated*
- *Situations in which some or all of the functions of the system cannot operate: Refer to "Situations in which some or all of the functions of the system cannot operate" (P.3-54) in this section.*

Adaptive cruise control warning messages and buzzers

– *For safe use: Refer to "For safe use" (P.3-48) in this section.*

Preceding vehicles that the sensor may not detect correctly

In the following situations, depending on the conditions, if the system cannot provide sufficient deceleration or acceleration is necessary, operate the brake pedal or accelerator pedal.
As the sensor may not be able to correctly detect these types of vehicles, the approach warning may not operate.
Refer to "Approach warning" (P.3-99) in this section.

- *When a vehicle cuts in front of your vehicle or changes lanes away from your vehicle extremely slowly or quickly*
- *When changing lanes*
- *When a preceding vehicle is driving at a low speed*
- *When a vehicle is stopped in the same lane as the vehicle*
- *When a motorcycle is traveling in the same lane as the vehicle*

Conditions under which the system may not operate correctly

In the following situations, operate the brake pedal (or accelerator pedal, depending on the situation) as necessary.
As the sensor may not be able to correctly detect a vehicle, the system may not operate properly.

- *When a preceding vehicle brakes suddenly*
- *When changing lanes at low speeds, such as in a traffic jam*

Approach warning

In situations where the vehicle approaches a preceding vehicle and the system cannot provide sufficient deceleration, such as if a vehicle cuts in front of the vehicle, a warning display will flash and a buzzer will sound to alert the driver. Depress the brake pedal to ensure appropriate vehicle-to-vehicle distance.

• Warnings may not occur when

In the following situations, the warning may not operate even though the vehicle- to-vehicle distance is short.

- When the preceding vehicle is traveling at the same speed or faster than your vehicle
- When the preceding vehicle is traveling at an extremely low speed
- Immediately after the vehicle speed has been set
- When the accelerator pedal is depressed

Curve speed reduction function

When a curve is detected, the vehicle speed will begin being reduced. When the curve ends, the vehicle speed reduction will end.
Depending on the situation, the vehicle speed will then return to the set vehicle speed.
In situations where vehicle-to-vehicle distance control needs to operate, such as when a preceding vehicle cuts in front of your vehicle, the curve speed reduction function will be canceled.

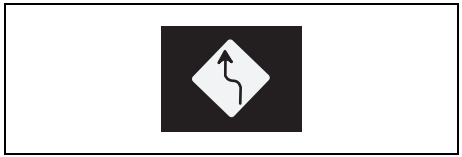

69TJ050960

NOTE:
Situations in which the curve speed reduction function may not operate

In situations such as the following, the curve speed reduction function may not operate:
- *When the vehicle is being driven around a gentle curve*
- *When the accelerator pedal is being depressed*
- *When the vehicle is being driven around an extremely short curve*

Changing the settings of the curve speed reduction function

Various settings of the curve speed reduction function can be changed through customize settings. Refer to "Setting mode" in "BEFORE DRIVING" section.

Support for lane change

If your vehicle is being driven at approximately 80 km/h (50 mph) or more and a lane change to the passing lane is performed, when the turn signal control lever is operated for lane changing, the vehicle will accelerate up to the set speed to assist in overtaking.
If your vehicle is being driven at approximately 80 km/h (50 mph) or more and the lane is changed to that with a vehicle traveling slower than your vehicle, when the turn signal control lever is operated the vehicle will gradually decelerate to assist in changing lanes.

Adaptive cruise control with traffic sign recognition (if equipped)

When traffic sign recognition function is enabled and the adaptive cruise control is operating, if a speed limit sign is detected, the detected speed limit will be displayed with an up/down arrow. The set speed can be increased/reduced to the detected speed limit by pressing and holding the "RES +" switch or "–" switch.

• When the set speed is lower than the detected speed limit

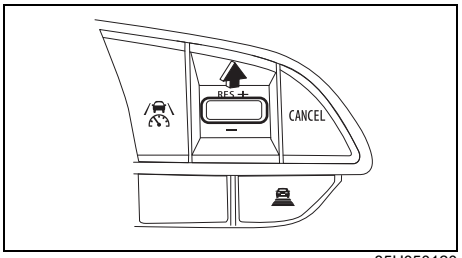

85U050120

Press and hold the "RES +" switch when the UP arrow is indicated in the information display.

• When the set speed is higher than the detected speed limit

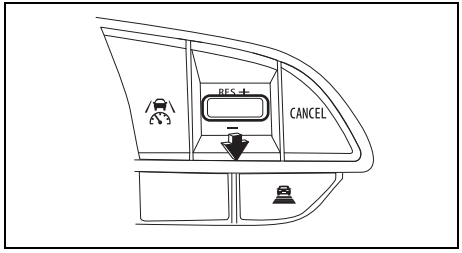

85U050130

Press and hold the "–" switch when the DOWN arrow is indicated in the information display.

• Enabling/disabling the adaptive cruise control with traffic sign recognition

The adaptive cruise control with traffic sign recognition can be enabled/disabled through customize settings. Refer to "Setting mode" in "BEFORE DRIVING" section.

NOTE:

The adaptive cruise control with traffic sign recognition may not operate properly when

As the adaptive cruise control with traffic sign recognition may not operate properly in situations where the traffic sign recognition may not operate or cannot detect signs correctly, when using this function, make sure to confirm the actual speed limit.

In the following situations, the set speed may not change to the detected speed limit by pressing and holding the "RES +" switch or "–" switch:

- *When speed limit information is not available*
- *When the detected speed limit is the same as the set speed*
- *When the detected speed limit is outside of the speed range which the adaptive cruise control can operate*

Changing adaptive cruise control settings

The settings of the adaptive cruise control can be changed through customize settings. Refer to "Setting mode" in "BEFORE DRIVING" section.

Warning and indicator messages

The information display shows the warning and indicator messages to let you know about certain problems of the adaptive cruise control.

When adaptive cruise control (with following function for all speed) cannot be set

Indicator	Message	Master warning indicator light	Sound	Cause and remedy
 69T050860	"ACC SYSTEM UNAVAILABLE TURN ON ESP SYSTEM"	Off	Beeps at short intervals (from interior buzzer)	Adaptive cruise control cannot be set because ESP® is OFF. Set ESP® to ON.
 69T050860	"ACC SYSTEM UNAVAILABLE SHIFT INTO D"	Off	Beeps at short intervals (from interior buzzer)	Adaptive cruise control cannot be set because the gearshift lever is not in "D" position. Shift the gear-shift lever in "D" and try again.
 69T050860	ACC SYSTEM UNAVAILABLE	Off	Beeps at short intervals (from interior buzzer)	Adaptive cruise control cannot be set except for the above causes. Ensure operating conditions and try again.

When adaptive cruise control (with following function for all speed) is automatically cancelled

Indicator	Message	Master warning indicator light	Sound	Cause and remedy
No display	"DEPRESS BRAKE PEDAL"	Off	Continuous beep (from interior buzzer)	Adaptive cruise control was cancelled because the system was unable to continuously stop the vehicle.
		Off	Continuous beep (from interior buzzer)	Adaptive cruise control is cancelled except for the above cause. Improve the cause, set adaptive cruise control again.

Displays and system operation

The operating state of the adaptive cruise control is indicate.

Indicator light	Set vehicle speed	Vehicle-to-vehicle distance setting	Preceding vehicle mark	Situation
 On (white)	 Off / On (white)	 On (white)	Off	Adaptive cruise control is on standby
 On (green)	 On (green)	 On (blue)	Off	Constant speed cruising / acceleration

Indicator light	Set vehicle speed	Vehicle-to-vehicle distance setting	Preceding vehicle mark	Situation
 On (green)	 On (green)	 On (blue)	 On	Deceleration / follow-up cruising
 On (green)	 On (white)	 On (white)	 On (gray)	Stop control is in progress / accelerating by operating the accelerator pedal
 On (green)	 On (green)	 Blinks (yellow)	 Blinks (yellow)	Approach warning is operating
 On (yellow)	 Off / On (white)	Off	Off	Adaptive cruise control system is temporarily stopped
 On (yellow)	Off	Off	Off	There is a malfunction in the adaptive cruise control system

Ultrasonic sensors

The ultrasonic sensor transmits ultrasonic, it hits an obstacle and the sensor receive the reflected ultrasonic again. The sensor will detect the position of the obstacle based on the time which takes for transmitting and receiving ultrasonic.

Front (if equipped)

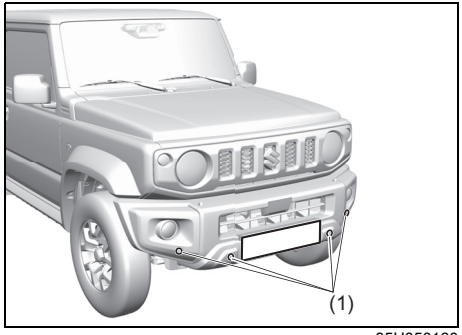

85U050160

(1) Ultrasonic sensors

Rear

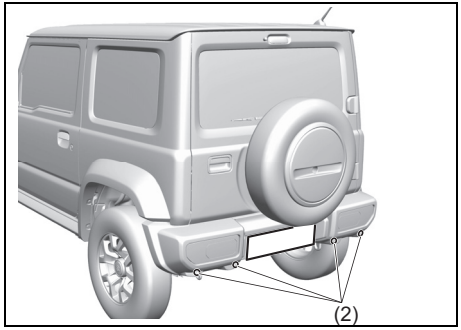

85U050140

(2) Ultrasonic sensors

- The position of each ultrasonic sensor in the above figure is a typical example; the actual equipment depends on the vehicle type.

⚠ WARNING

<u>To prevent malfunction of the ultrasonic sensor</u>

Observe the following precautions. Failure to do so may lead to the ultrasonic sensor not operating properly, possibly leading to an accident resulting in death or serious injury.

- **Keep the ultrasonic sensors clean at all times.**
- **Clean the ultrasonic sensors if it is dirty or covered with water droplets, snow, plastic bag, etc. Clean the ultrasonic sensors with a soft cloth so as to not mark or damage them.**
- **Do not attach accessories, stickers (including transparent stickers), etc. to the ultrasonic sensors and their surrounding area.**
- **Do not subject the ultrasonic sensors or their surrounding area to impact.**
  If the ultrasonic sensors or bumper(s) have been subjected to an impact, have the vehicle inspected by an authorized SUZUKI dealer or a qualified workshop.
- **Do not change the position or orientation of the ultrasonic sensor or remove it.**

(Continued)

⚠ WARNING

(Continued)

- **Do not disassemble the ultrasonic sensors.**
- **Do not modify or paint the ultrasonic sensors or ultrasonic sensor covers, or replace them with anything other than SUZUKI genuine parts.**
- **When using a high-pressure cleaner, do not point the nozzle to the ultrasonic sensors.**
- **When using steam to clean the vehicle, do not direct steam too close to the ultrasonic sensors.**
- **In the following situations, an angle measurement/ initialization of the ultrasonic sensor will be necessary. Contact an authorized SUZUKI dealer or a qualified workshop for details.**
  - **When an ultrasonic sensor is removed and installed, or replaced**
  - **When the bumper has been replaced**

Temporary stop or failure of the ultrasonic sensor

	Instrument cluster	Information display message	Ultrasonic sensor	
			Temporary stop	Failure
(1)	 59S010120	–	On	
(2)	 80P0382	–	Off	Blinks
(3)	 69T040310	"CLEAN PARKING SENSORS"	Displayed	Not displayed
(4)	 69T040310	"SERVICE PARKING SENSORS"	Not displayed	Displayed

(1) Parking sensor indicator light
(2) Master warning indicator
(3) Indication of the parking sensor needs cleaning
(4) Failure of the ultrasonic sensor

NOTE:
When a temporary stop of the ultrasonic sensor, or failure of the ultrasonic sensor occurs, the parking sensors will stop.

Temporary stop of the ultrasonic sensor

The ultrasonic sensor will temporarily stop under the following situations. If the situations are improved, temporary stop of the ultrasonic sensor will be canceled.

- When any foreign object such as dirt, snow and ice is attached to the ultrasonic sensor
- When the battery has temporarily a voltage abnormality

Failure of the ultrasonic sensor
When the ultrasonic sensor is faulty, the function of the ultrasonic sensor is stopped until turn the ignition switch to “OFF” position or the engine switch is pressed to change the ignition mode to LOCK (OFF).
Stop the vehicle in a safe place, turn the ignition switch is turned to “LOCK” position or press the engine switch to change the ignition mode to LOCK (OFF) and stop the engine. Then, restart the engine and check that the parking sensor indicator light is turned off.
If the parking sensor indicator light stays on after restarting the engine, there may be a failure of the ultrasonic sensor. Ask an authorized SUZUKI dealer or a qualified workshop to have the ultrasonic sensor inspected.

NOTE:
If the parking sensor indicator light comes on and there may be a failure of the ultrasonic sensor, the system will stop. However, there would not be a problem to normal driving.

When the ultrasonic sensor detects any foreign object
When the ultrasonic sensor detects any foreign object such as dirt, snow or ice which attaches to the sensor, the indication will be displayed on the information display as the following chart shows. When you remove the attached foreign object, the ultrasonic sensor will properly function again. While any foreign object is detected, the ultrasonic sensor will temporarily stop functioning. Even though no foreign object is attached to the ultrasonic sensor and the following indication is displayed, there may be a possibility of sensor abnormality. Ask an authorized SUZUKI dealer or a qualified workshop to have the ultrasonic sensor inspected.

Information display



85U030240

“CLEAN PARKING SENSORS”

*The side which detects any foreign object is shown

Situations where the ultrasonic sensor may not activate properly
Under the following situations, the ultrasonic sensor may not activate properly.

- When any foreign object such as dirt, snow or ice is attached to the ultrasonic sensor (In this case, remove the foreign object)

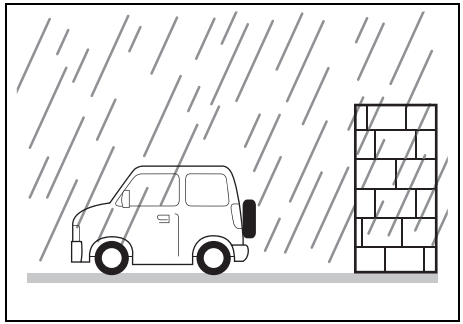

85U030250

- When it is bad weather such as heavy rain, fog or a blizzard
- When strong winds are blowing
- When backward visibility is poor due to exhaust gas from the vehicle, water, snow, water vapor, sand or smoke
- When the ultrasonic sensor is covered by a sticker or an accessory
- When a commercially-available electrical component such as a towing hook, a back-lit license plate, a fog lamp, a corner pole or a radio antenna is equipped

- When the vehicle position or the height of bumper is changed due to modification of suspension
- When the installed direction of the parking sensor(s) is misaligned due to a collision
- When snow chains or the tyres of undesigned size are equipped
- When the vehicle is inclined to drive over bumps on the road
- When the surrounding part of the ultrasonic sensor is hot or cold under the blazing sun or in extremely cold weather
- When humidity is extremely high or low

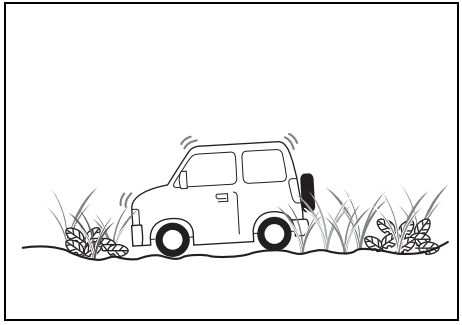

80T00085

- When you drive on rough road, slope, gravel or grown grass
- When your vehicle is severely inclined
- When there is any object which emits ultrasonic characteristics such as horn from the other vehicle, engine sound from a motorcycle, air brake sound from a large-size vehicle, brake sound, vehicle detector or ultrasonic sensor from the other vehicle
- When the ultrasonic sensor gets too close to an obstacle
- When the vehicle is moved in a diagonal direction towards an obstacle or to the edge or corner of a wall (reflected wave is not returned)

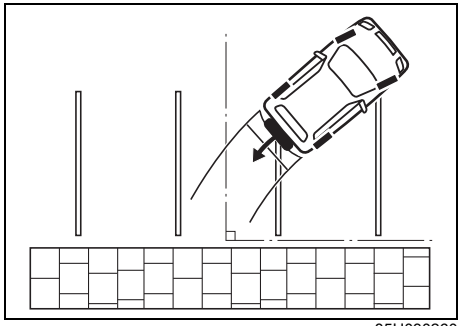

85U030260

- When an obstacle such as a wall is not in a vertical position of the vehicle
- A wall which is not in vertical position of the ground, a rough wall, a wall or shutter which has running wavy pattern
- A pole which is protruded from a wall or a pipe arrangement

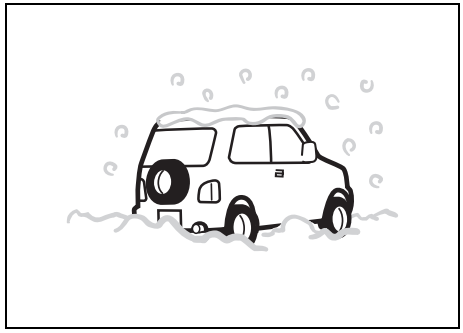

80T00087

- An object which easily absorbs sonic wave such as a person, a spongy object or a snow wall
- A moving object such as a pedestrian, a bicycle or an animal
- An object which suddenly rushes out into the traveling direction of the vehicle (while or immediately after the vehicle is turning around)
- The ultrasonic sensor may not detect the following obstacles:
  – An obstacle in the shape of pole such as a sign or a street lamp
  – A low-height obstacle such as a guardrail
  – A small obstacle or a thin obstacle such as a chain or a rope
  – A micromesh fence

Parking sensors



85U030170

(1) Symbol representing an obstacle detected by parking sensor*

*This symbol shows that an obstacle is located on the right rear of vehicle.

- The parking sensor system uses ultrasonic sensors to detect obstacles near the bumper(s). If obstacles are sensed while you are parking or moving the vehicle slowly, the system warns you by sounding a buzzer and displaying symbols representing the obstacles on the information display in the instrument cluster.
- The system emits an ultrasonic wave and the relevant sensor detects the return of the wave reflected by an obstacle. The system measures the time taken by the ultrasonic wave to reach the obstacle and return from it, from which it determines the obstacle's position.
- The parking sensor function can be used when you turn the ignition switch to "ON" position or press the engine switch to change the ignition mode to ON and the gearshift lever is in other than "P" position (for automatic transmission vehicles). This function is helpful in the following cases: pulling over to the curb; parallel parking the vehicle; steering the vehicle into a garage; driving along an alley; and moving slowly in a place with obstacles.

⚠ WARNING

- **The parking sensor warns you of obstacles with buzzers and by showing you the location of the obstacles on the information display. However, you still have to drive with particular care.**
- **The sensors can detect obstacles only within a limited area and only when the vehicle is moving within a limited speed range. So, in tricky areas, you must move the vehicle slowly while checking around it using your direct vision or rearview mirrors. There is increased risk of an accident if you control the vehicle relying only on the parking sensor.**

Sensor locations

Front (if equipped)

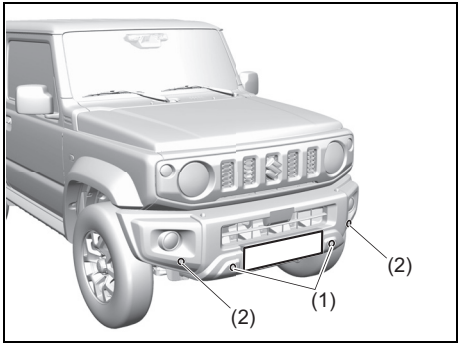

85U050170

(1) Front center sensors (2 places)
(2) Front corner sensors (2 places)

Rear

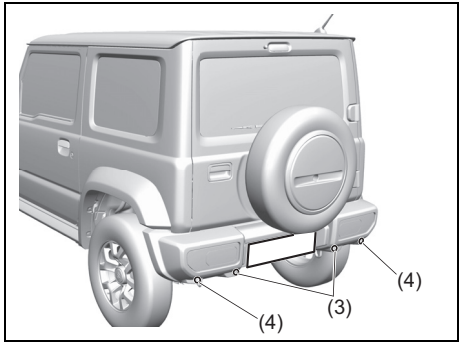

85U050150

(3) Rear center sensors (2 places)
(4) Rear corner sensors (2 places)

NOTICE

- **Avoid hitting the sensor areas or directing the nozzle of a high-pressure car washer onto the sensor areas. Otherwise, the sensors may be damaged.**
- **If the bumper hits a hard object, the sensors on it may not work properly. If this occurs, have the sensors inspected by an authorized SUZUKI dealer or a qualified workshop.**

Working sensors

The sensors work depending on the gearshift lever position and parking brake lever position as follows:

Gearshift lever position		Parking brake lever	Front sensor (if equipped)		Rear sensor	
			Center	Corner	Center	Corner
Automatic transmission	P	No relation	Off	Off	Off	Off
	R		Off	On	On	On
	N, D, 2, L		On	On	Off	Off

Approximate areas where obstacles can be detected

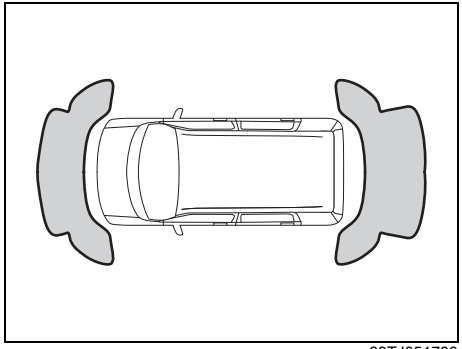

69TJ051780

- An obstacle within about 20 cm (8 in) from a sensor or just below a sensor is not detectable.
- The detection distance of rear corner sensors is within about 60 cm (2.0 ft).
- The center sensors can detect within about 60 – 100 (2.0 – 3.3 ft) cm from the front and 60 – 150 (2.0 – 4.9 ft) cm from the rear.

⚠ WARNING

- **Under the following conditions, the parking sensor system may not work normally because the sensors cannot detect obstacles correctly.**
  - **– Sensors are covered with mud, ice or other materials. (Such materials must be removed for normal operation.)**
  - **– Sensors are wet from water splashes or heavy rain.**
  - **– Sensors are covered by a hand, sticker, accessory, etc.**
  - **– There is an accessory or other object attached within the sensor's sensing area.**
  - **– Items such as tow hooks, commercially available corner poles, radio antenna, etc. are installed on the bumper.**
  - **– The height of the bumper is changed due to alteration to the suspension or other causes.**
  - **– The sensor areas are extremely hot from direct sunlight or cold due to freezing weather.**
  - **– The vehicle is on a rough surface, slope, gravel road or grass field.**
  - **– The vehicle is at a steep angle.**

(Continued)

⚠ WARNING

(Continued)

- **– Sensors have intercepted ultrasonic noise from another vehicle's horn, engine, air braking system (large vehicles), or parking sensor.**
- **– Obstacles are too close to the sensors.**
- **– Sensors are at an angle to a highly reflective object such as glass. (Ultrasonic waves are not reflected back from the obstacle.)**

- **Sensors may not be able to correctly detect the following types of obstacles:**
  - **– Objects made of a thin material such as wire netting and ropes**
  - **– Square-shaped curbstones or other objects with sharp edges**
  - **– Tall objects with a large upper part such as a road sign**
  - **– Low-profile objects such as curbstones**
  - **– Sound-absorbing objects such as cotton and snow**

NOTE:

- *Thin poles or obstacles lower than the sensors may become undetectable as the vehicle moves closer to them even if they have been detected from longer distances.*
- *The system may calculate the distance to a road sign or similar obstacle to be shorter than the actual distance.*

Obstacle indication by parking sensor

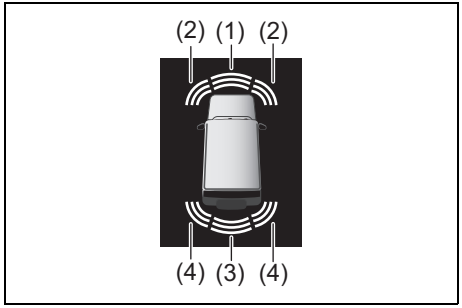

85U030180

(1) Obstacle detected by front center sensors
(2) Obstacle detected by front corner sensors
(3) Obstacle detected by rear center sensors
(4) Obstacle detected by rear corner sensors

Upon detecting an obstacle, the parking sensor causes an interior buzzer to sound and a symbol representing the obstacle appears on the information display and the parking sensor indicator light blinks.

- A different symbol is displayed depending on the direction and distance of the obstacle.
- A buzzer sounds when a sensor detects an obstacle.
- Warnings when obstacles are detected by sensors

Distance (approx.)		Buzzer	Information display
Front center sensors	60 – 100 cm (24 – 39 in)	Short beeps at long intervals	
Rear center sensors	60 – 150 cm (24 – 59 in)		
45 – 60 cm (18 – 24 in)		Short beeps at short intervals	
35 – 45 cm (14 – 18 in)		Short beeps at very short intervals	
Less than 35 cm (14 in)		Continuous beep	

NOTICE

- **If anything other than the buzzer explained in above table sounds, the sensor may be failure. Consult an authorized SUZUKI dealer or qualified workshop.**
- **If there is a malfunction of the parking sensor, the indicator light of the parking sensor buzzer OFF switch will not come on. If the indicator light of the parking sensor buzzer OFF switch does not come on, consult an authorized SUZUKI dealer or qualified workshop.**

NOTE:
- *Symbols are displayed with a short delay after the detection of obstacles.*
- *If the system detects multiple obstacles simultaneously, the display shows all of their positions using the corresponding symbols. However, the buzzers will sound only for the nearest obstacles.*
- *Even in places where the buzzer always sounds when an obstacle is detected, the buzzer may not sound depending on the situation.*
- *When the parking sensor detects an obstacle while it is operating, the parking sensor indicator light will blink.*

Warning and indicator messages
If there is a problem or warning regarding the parking sensor system, a message is displayed on the information display in the instrument cluster, and a symbol blinks. If a message is displayed, follow its instruction.

Indicator	Message	Symbol	Probable cause and remedy
	“SERVICE PARKING SENSORS”	Not displayed	There may be a problem with the parking sensor system. Have your vehicle inspected by an authorized SUZUKI dealer or a qualified workshop.
	“CLEAN PARKING SENSORS”	One blinking line in a sensor location.	The indicated sensor is contaminated. Wipe it clean with a soft cloth.

Situations where the parking sensor system does not activate
Under the following situations, the parking sensor system does not activate properly.
- For few seconds immediately after turning the ignition switch to “ON” position or changing the ignition mode to ON
- For Automatic transmission vehicle:
  – When the gearshift lever is in “P” position
  – When the position of the gearshift lever does not match the selector position shown in the information display, or when “–” is displayed
- For Manual transmission vehicle:
  – When the gearshift lever is in a position other than “R” position and the parking lever is applied
  – When the “R” (reverse gear) indicator light does not come on even if the gearshift lever is shifted into “R” position
- When an obstacle cannot be detected
- When the parking sensor system is temporarily stopped or malfunctioning
  – For details, refer to “Temporary stop of the ultrasonic sensor” (P.3-107) and “Failure of the ultrasonic sensor” (P.3-108) in this section.

Parking sensor buzzer OFF switch

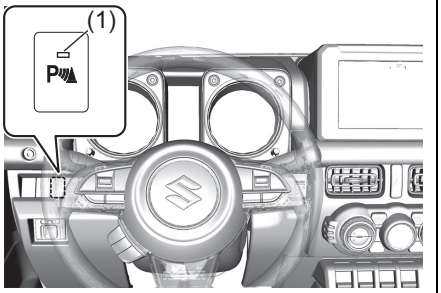

85U030220

If you press the parking sensor buzzer OFF switch when the interior buzzer sounds after detecting an obstacle, the buzzer will be temporarily stopped. The parking sensor buzzer OFF switch indicator light (1) goes out when the parking sensor buzzer is paused.
While the parking sensor buzzer is suspended, the buzzer will sound again under the following conditions.

- When the parking sensor buzzer OFF switch is pressed again
- Manual transmission vehicle:
  When you shift into R position from a position other than R while driving backward
- Automatic transmission vehicle:
  When you shift the gearshift lever from a position other than R to R while driving backward
  When you shift the gearshift lever from a position other than N, D, 2 or L to N, D, 2 or L while driving forward

NOTE:
Depending on the surrounding conditions, the parking sensor buzzer may sound again when an obstacle is detected while the buzzer is temporarily stopped.

Rearview camera (if equipped)

When the gearshift lever is shifted to “R” position while the ignition switch is in “ON” position or the ignition mode is “ON”, the rearview camera system automatically shows the view behind the vehicle on the display.

⚠ WARNING

The distance viewed in the rearview camera may differ from the actual distance according to the condition of road or the load the vehicle is carrying. Since the camera display area is also limited, backing up by only looking at the display may cause an accident or a crash with an object.
The rearview camera cannot replace the driver’s attention. The driver alone is responsible for parking and similar driving maneuvers.

- **Use the rearview camera only to provide driving assistance.**
- **Always drive carefully confirming the safety of the rear and the surrounding conditions by looking directly with your eyes and using the rear view mirror.**
- **Check that the trunk lid is securely closed when backing up.**

NOTICE

If you use the rearview camera for a long time when the ignition switch is in "ON" position or the ignition mode is ON, but the engine is not running, the battery may discharge.
Do not leave the ignition switch in "ON" position or the ignition mode to ON for a long time when the engine is not running.

Rearview camera location

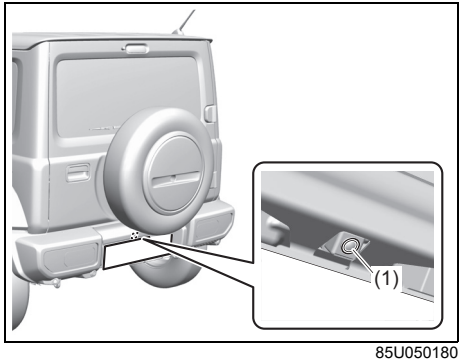

85U050180

(1) Rearview camera

The rearview camera is installed on the rear bumper.

NOTICE

- **The rearview camera is a precision instrument. If you strike the camera, it may be broken and cause damage resulting in a catch fire or a malfunction.**
  - **– Do not strike the camera.**
  - **– Do not remove snow or mud on the camera lens with a stick.**
- **If water enters the rearview camera, it may cause a malfunction or catch fire.**
  Do not use high pressure water around the camera.
- **This lens is hard coated to prevent damage or discoloration. Damage or discoloration of lens may obscure the image.**
  - **– Do not use a brush to clean lens.**
  - **– Do not use alcohol, benzine or thinner to clean the lens.**
  - **– Do not use wax on the camera lens.**

NOTE:
If body wax gets on the camera lens, wipe off the wax with a clean cloth dampened with mild detergent diluted with water, and then wipe the lens with a dry cloth.

How to use rearview camera

1) Turn the ignition switch to "ON" position or press the engine switch to change the ignition mode to "ON".
2) Shift the gearshift lever in "R" position.
   - The display automatically shows the view behind the vehicle.
   - When the gearshift lever is shifted from "R" to another gearshift lever position, the display returns to the previous display.

NOTE:
The rearview camera display has first priority in any display mode. However, the rearview camera display does not show the rear view while the system is initializing.

Display range of rearview camera

The rearview camera display shows the area behind the rear end of the bumper. The display cannot show objects which are close to the bumper or under the bumper.
The rearview camera display cannot show obstacles which are higher than the camera. Spare tyre and upper parts of tall objects such as road signs cannot be viewed on the display.

Display range of rearview camera

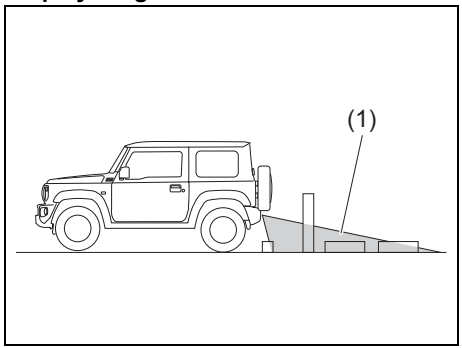

85U050190

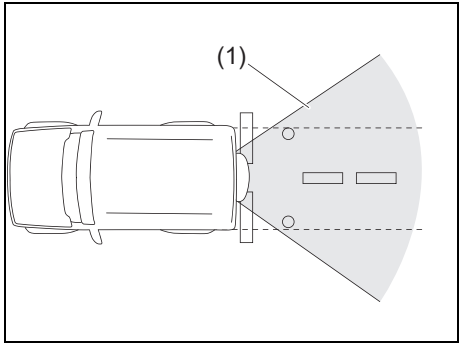

85U050200

(1) Display range

NOTE:

- *Images shown on the display from the rearview camera are reversed images (mirror images).*
- *The colors of objects on the rearview camera may differ from the actual object colors.*
- *The rearview camera display may be difficult to see under the following conditions, but this is not a system malfunction.*
  - *In dark areas, on a rainy day or at night.*
  - *When the temperature around the lens is too high/low, or the camera is wet such as on a rainy day or during periods of high humidity (dew condensation may occur on the camera lens).*
  - *When a foreign object such as mud or a drop of water is stuck around the camera lens.*
  - *When strong light directly enters the camera (vertical lines may be seen on the display).*
  - *Under fluorescent light (The display may flicker).*
  - *When the outside temperature is low (the image on the display may be darkened).*
  - *When the engine is left running while the vehicle is stopped for a long time (noise may appear in the display)*
  - *When a camera lens is dirty or when snow or waterdrop is attached to a camera lens*

How to understand the displayed items on the screen

The rearview camera display and following guide lines will be displayed on the screen.

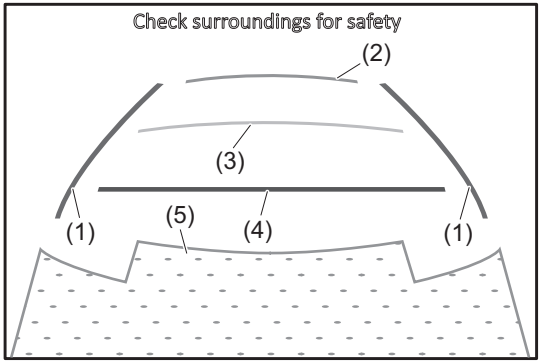

80T051090

- As each guide line is displayed towards road surface, the distance from your vehicle to an obstacle such as the parked vehicle near your vehicle is not accurately displayed.
- Trapezoidal guide lines for the distance and the vehicle width which are displayed on the screen are rough indications and they depend on the actual distance and vehicle width.
- If you modify suspensions or replace a tyre by undesignated tyre, the guide lines will not be accurately displayed.

No.	Item name	Displayed color	Contents
(1)	Guide line for the vehicle width (vertical line)	Purple	This shows the guide line of the position which is slightly outside of the vehicle width (including the width of outside rearview mirrors).

No.	Item name	Displayed color	Contents
(2)	Guide line for the distance	Light blue	This shows the guide line of the position which is about 2 m (6.6 ft) backward from the center of bumper back-end.
(3)		Yellow	This shows the guide line of the position which is about 1 m (3.3 ft) backward from the center of bumper back-end.
(4)		Red	This shows the guide line of the position which is about 0.5 m (1.6 ft) backward from the center of bumper back-end
(5)	Guide line for the vehicle body	Orange	This shows the guide line of the position of the vehicle body shape (including the spare wheel).

Rearview camera screen indication

The distance viewed in the rearview camera may differ from the actual distance according to the condition of the road or the load the vehicle is carrying.

Uphill incline behind the vehicle

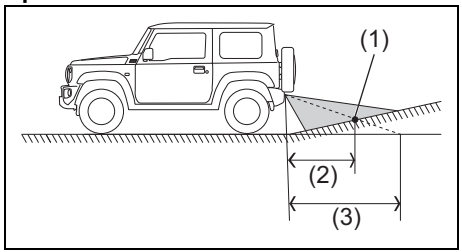

85U050210

(1) Object
(2) Actual distance
(3) Distance on the display

When there is an uphill incline behind the vehicle, the object shown on the display appears farther away than the actual distance.

Downhill incline behind the vehicle

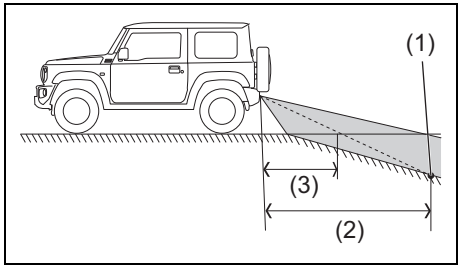

85U050220

(1) Object
(2) Actual distance
(3) Distance on the display

When there is a downhill incline behind the vehicle, the object shown on the display appears closer than the actual distance.

When there is an steric object near your vehicle

In this case, the distance from your vehicle to the steric object may be different from the actual distance.

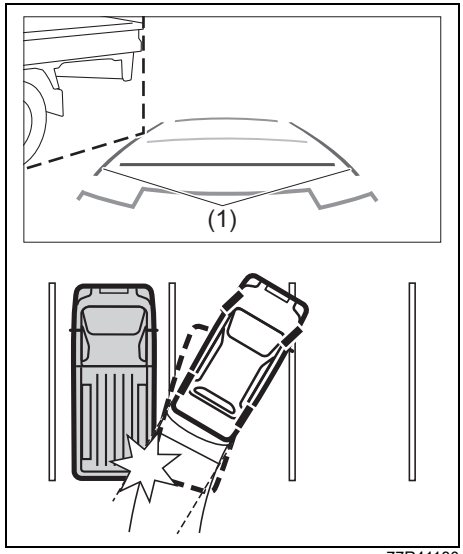

77R41180

(1) Guide line for the vehicle width (vertical line)

When you doubt malfunction of camera

If the rear view from the rearview camera is not shown or there is a poor image

- If the rear view from the rearview camera is not shown.
  - Check that the ignition switch is in “ON” position or the ignition mode is “ON”.
  - Check that the gearshift lever is shifted to “R” position.
- If the image from the rearview camera is poor.
  - Check that the camera lens is not dirty.
  - Check that light from the sun or the beam of the headlights from the vehicle behind is not shining directly into the lens.

If the rearview camera system is still not working properly after checking the above, have the system inspected by an authorized SUZUKI dealer or a qualified workshop as soon as possible.

When the image and the guide lines are misaligned

In the following case, the image and the guide lines will be misaligned. However, this is not malfunction.

- Your vehicle is tilted due to the number of passengers and baggage.

Emergency Stop Signal (ESS)

ESS stands for Emergency Stop Signal.

ESS is a feature that gives a warning to a following vehicle by flashing all turn signal lights faster than usual if all the following conditions are met. Also, within these conditions, it will flash along with your turn signal in the instrument cluster.

- When you slam down on the brakes at speeds of approximately 55 km/h (34 mph) or over.
- When the ABS is activated or when you suddenly brake similar to activating the ABS.

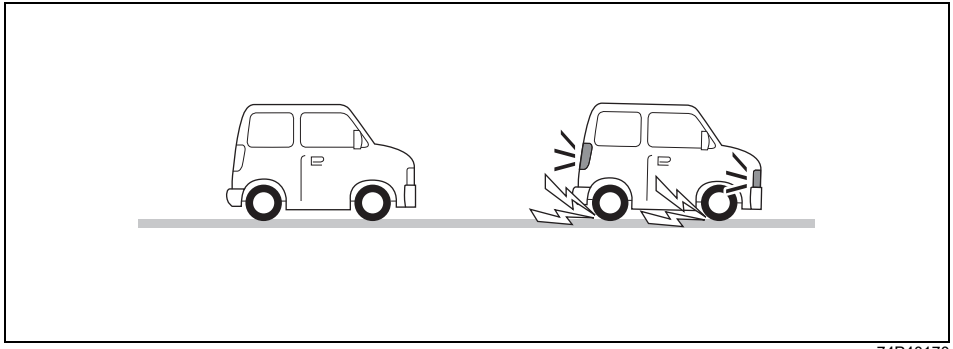

74P40170

The ESS will stop functioning in the following situations:

- When you release the brake
- When the ABS is no longer activated
- When you turn on the hazard warning switch
- When the car is no longer rapidly decelerating

⚠ WARNING

Although the ESS is designed to reduce the number of rear-end collisions that occur from sudden braking, by warning a following vehicle, it cannot prevent all collisions. Always make an effort to drive safely and avoid unnecessary sudden braking when stopping or decelerating.

NOTE:

- *The ESS feature cannot be deactivated.*
- *Use of the hazard warning switch should be given preference over the ESS.*
- *When driving on the following surfaces and the ABS gives out momentarily, the ESS may not function.*
  - *When driving on slippery surfaces*
  - *When driving over bumps on the road such as highway joint seams*

Braking

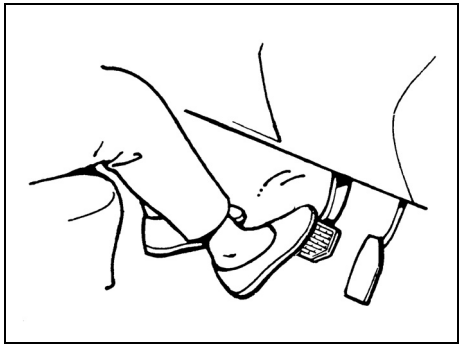

60G165S

The distance needed to bring any vehicle to a halt increases with the speed of the vehicle. The braking distance needed, for example, at 60 km/h (37 mph) will be approximately 4 times greater than the braking distance needed at 30 km/h (19 mph). Start to depress the brake pedal when there is plenty of distance between your vehicle and the stopping point, and slow down gradually.

⚠ WARNING

If water gets into the brake devices, brake performance may become poor and unpredictable. After driving through water or washing the underside of the vehicle, test the brakes while driving at a slow speed to see if they have maintained their normal effectiveness. If the brakes are less effective than normal, dry them by repeatedly applying the brakes while driving slowly until the brakes have regained their normal effectiveness.

Power-assisted brakes

Your vehicle has power-assisted brakes. If power assistance is lost due to a stalled engine or other failures, the system is still fully operational on reserve power and you can bring the vehicle to a complete stop by pressing the brake pedal once and holding it down. The reserve power is partly used up when you depress the brake pedal and reduces each time the pedal is pressed. Apply smooth and even pressure to the pedal. Do not pump the pedal.

⚠ WARNING

Even without reserve power in the brake system, you can still stop the vehicle by pressing the brake pedal harder than normally required. However, the stopping distance may be longer.

Brake assist system

When you slam the brakes on, the brake assist system determines it to be an emergency stop and provides more powerful braking for a driver who cannot hold down the brake pedal firmly.

Anti-lock brake system (ABS)

ABS will help you avoid skidding by electronically controlling braking pressure. It will also help you maintain steering control when braking on slippery surfaces or when braking hard.
The ABS works automatically, so you do not need any special braking technique. Just push the brake pedal down without pumping. The ABS will operate whenever it senses that the wheels are locking up. You may feel the brake pedal move a little while the ABS is operating.

NOTE:
- *The ABS will not work if vehicle speed is under about 9 km/h (6 mph).*
- *If the ABS system is activated, you may hear a clunking noise and/or feel pulsating in the brake pedal. This is normal and indicates that the brake fluid pressure is being controlled properly.*
- *You may hear an operation sound when you start the engine or after the vehicle begins to move. This means that the above systems are in the self-check mode. This sound does not indicate a malfunction.*

⚠ WARNING

- **On some types of loose surfaces (such as gravel, snow-covered roads, etc.), the stopping distance required for a vehicle with ABS may be slightly greater than the one required for a comparable vehicle with a conventional brake system. With a conventional brake system, skidding tyres are able to plow the gravel or snow layer, shortening the stopping distance. ABS minimizes this resistance effect. Allow for extra stopping distance when driving on loose surfaces.**
- **On regular paved roads, some drivers may be able to obtain slightly shorter stopping distances with conventional brake systems than with ABS.**
- **In both of the above conditions, ABS will still offer the advantage of helping you maintain directional control. However, remember that ABS will not compensate for bad road or weather conditions or poor driver judgment. Use good judgment and do not drive too fast.**

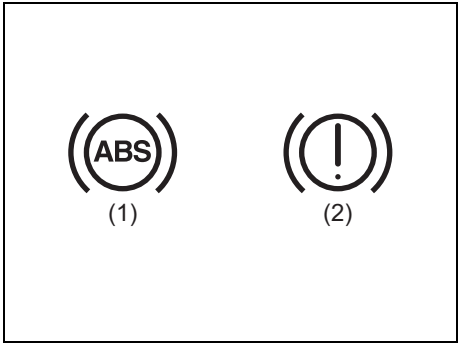

54MN069

(1) ABS warning light
(2) Brake system warning light

⚠ WARNING

- **If the ABS warning light (1) on the instrument cluster comes on and stays on while driving, there may be a problem with the ABS system. Ask an authorized SUZUKI dealer or a qualified workshop to inspect the ABS system immediately. If the ABS system becomes inoperative, the brake system will function as an ordinary brake system that has no ABS.**
- **If the ABS warning light (1) and the brake system warning light (2) on the instrument cluster simultaneously stay on or come on while driving, both anti-lock function and rear brake force control function (proportioning valve function) of the ABS system may have failed. If so, the rear wheels may easily skid or the vehicle can even spin in the worst case when braking on a slippery road or when hard braking even on a dry paved road. Ask an authorized SUZUKI dealer or a qualified workshop to inspect the ABS system immediately. Drive carefully, avoiding hard braking as much as possible.**

How ABS works

A computer continuously monitors wheel speed. The computer compares the changes in wheel speed when braking. If the wheels slow suddenly, indicating a skidding situation, the computer will change braking pressure several times each second to prevent the wheels from locking. When you start your vehicle or when you accelerate after a hard stop, you may hear a momentary motor or clicking noise as the system resets or checks itself.

⚠ WARNING

The ABS may not work properly if tyres or wheels other than those specified in the owner's manual are used. This is because the ABS works by comparing changes in wheel speed. When replacing tyres or wheels, use only the size and type specified in this owner's manual.

Electronic Stability Program (ESP®)

ESP® is a registered trademark of Mercedes-Benz Group AG.

The Electronic Stability Program (ESP®) helps to control the vehicle during cornering if front wheels or rear wheels skid. It also assists you in maintaining traction while accelerating on loose or slippery road surfaces. It does this by regulating the engine's output, and by selectively applying the brakes. In addition, ESP® helps to avoid skidding by controlling braking pressure.

⚠ WARNING

The ESP® cannot enhance the vehicle's driving stability in all situations and does not control your vehicle's entire braking system. The ESP® cannot prevent accidents, including those resulting from excessive speed in turns, or hydroplaning. Only safe and attentive drive can prevent accidents. The capabilities of an ESP®-equipped vehicle must never be used as a substitute for careful driving.

The ESP® has the following three systems:

Stability control system

The vehicle stability control system helps provide integrated control of systems such as anti-lock brakes, traction control, engine control, etc. This system automatically controls the brakes and engine to help prevent the vehicle from skidding when cornering on a slippery road surface or when turning the steering wheel abruptly.

Traction control system

The traction control system automatically helps prevent the spinning of wheels when the vehicle is started or accelerated on slippery road surfaces. The system operates only if it senses that some of the wheels are spinning or beginning to lose traction. When this happens, the system operates the front or rear brakes and reduces engine power to limit wheel spin.

NOTE:
You may hear an operation sound when you start the engine or after the vehicle begins to move. This means that the above systems are in the self-check mode. This sound does not indicate a malfunction.

Anti-lock brake system (ABS)

ABS will help you avoid skidding by electronically controlling braking pressure. It will also help you maintain steering control when braking on slippery surfaces or when braking hard. The ABS works automatically, so you do not have to use any special braking technique. Just push the brake pedal down without pumping. The ABS will operate whenever it senses that wheels are locking up. You may feel the brake pedal pulsate while the ABS is operating.
(For more information on ABS, see “Braking” in this section.)

NOTE:
The ABS will not work if vehicle speed is under about 9 km/h (6 mph).

⚠ WARNING

- **The ESP® may not work properly if tyres or wheels other than those specified in the owner’s manual are used. When replacing tyres or wheels, use only the size and type specified in this owner’s manual.**
- **The ESP® may not work properly if tyres are not inflated to the recommended tyre pressure.**
- **The ESP® may not work properly if tyres are fitted with snow chains.**

(Continued)

⚠ WARNING

(Continued)
- **The ESP® may not work properly if the tyres are excessively worn. Replace tyres when the tread wear indicators in the grooves appear on the tread surface.**
- **The ESP® is not a substitute for winter tyres or snow chains on a snow-covered road.**

⚠ WARNING

- **The ESP® may not work properly if engine related parts such as the muffler are not equivalent to standard equipment or are extremely deteriorated.**
- **Do not modify the vehicle’s suspension since the ESP® may not work properly.**

NOTE:
- *If the ESP® system is activated, you may hear a clunking noise and/or feel pulsating in the brake pedal. This is normal and indicates that the brake fluid pressure is being controlled properly.*
- *You may hear an operation sound when you start the engine or after the vehicle begins to move. This means that the above systems are in the self-check mode. This sound does not indicate a malfunction.*

The ESP® indicator lights are described below:

ESP® warning light



52KM133

This light blinks 5 times per second when one of the following systems is activated.
- Stability control system
- Traction control system
- Hill descent control system

If this light blinks, drive carefully.

When the ignition switch is turned to "ON" position or press the engine switch to change the ignition mode to ON, this light comes on briefly so you can check that the light is working.

NOTICE
If the ESP® warning light comes on and stays on while driving, there may be a malfunction of the ESP® systems (other than ABS). You should have the systems inspected by an authorized SUZUKI dealer or a qualified workshop.

NOTE:
When the ESP® warning light comes on and stays on while driving, indicating a malfunction of the ESP® systems (other than ABS), the brake system will function as an ordinary ABS with no additional ESP® functions.

ESP® OFF indicator light



57L30045

You should turn the ESP® on during your ordinary driving, so that you have the benefits of all of the ESP® systems.

It may be required to turn the ESP® systems (other than ABS) off if your vehicle is stuck in sand, mud, or snow, where wheel spin is necessary.

NOTE:
- *When the vehicle speed is greater than approximately 30 km/h (19 mph), the ESP® systems (other than ABS) will turn on automatically and the ESP® OFF indicator light will go out.*
- *When the transfer gear is in "4L" (4-wheel drive low range) position, the ESP® systems (other than ABS) will be canceled to provide improved vehicle traction, and the ESP® OFF indicator light will come on.*
  When the transfer gear is in "4L" (4-wheel drive low range) position, braket-raction control can be activated. Braket-raction control brakes the spinning wheel to distribute drive power to the other wheels for increased climbing ability or for better performance on a rolling hill or a slippery surface.

ESP® OFF switch

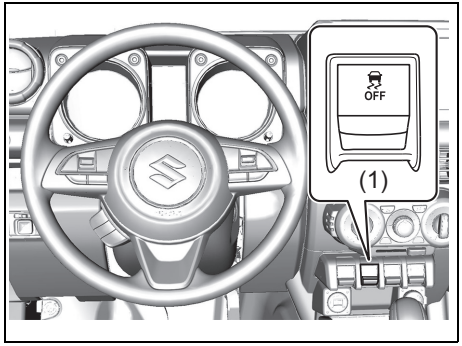

78RB03014

(1) ESP® OFF switch

When the ESP® OFF switch located at the instrument panel is pushed and held to turn off the ESP® systems (other than ABS), the ESP® OFF indicator light in the instrument cluster comes on.
When you have turned the ESP® systems (other than ABS) off, turn them back on before resuming ordinary driving.
When you push the ESP® OFF switch again, the ESP® OFF indicator light will go out and all of the ESP® systems will be activated.

NOTE:
When you push and hold the ESP® OFF switch for a while with the transfer lever in "4L" position, the hill hold control system can be deactivate.



85U020350

"SERVICE
ESP SYSTEM"

If the message shown in the above illustration appears on the information display, master warning indicator light blinks and the interior buzzer beeps, there may be a problem with the ESP® system. Have your vehicle inspected by an authorized SUZUKI dealer or a qualified workshop.

NOTE:
The ESP® system will not activate while this message is displayed.

NOTE:
If your vehicle is equipped with the Dual Sensor Brake Support II (DSBS II) system, when the ESP® system is turned off, Dual Sensor Brake Support II (DSBS II) system, lane departure warning, lane departure prevention, vehicle swaying warning and traffic sign recognition will be turned off. (High beam assist does not turn off.)

ABS warning light / brake system warning light

See “Braking” in this section.

Hill descent control system

The hill descent control system is designed to reduce the driver’s workload when going down steep, rough and/or slippery hills where the vehicle cannot decelerate enough by engine braking alone. The hill descent control system helps to control vehicle speed by automatically engaging the vehicle’s brakes, as needed, so you can concentrate on steering the vehicle.

⚠ WARNING

Do not rely excessively on the hill descent control system. The hill descent control system may not control the vehicle speed on a hill under all load or road conditions. Always be prepared to control vehicle speed by applying the brakes. Failure to pay attention and control vehicle speed using the brakes when necessary may result in loss of control or an accident.

Hill descent control switch

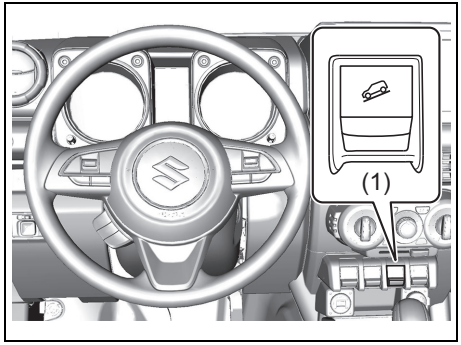

78RB03015

(1) Hill descent control switch

To activate the hill descent control system:

1) Shift the transfer lever into 4-wheel drive high range position (“4H”) or 4-wheel drive low range position (“4L”).
2) Shift the gearshift lever into a forward gear or reverse gear.
3) Push the hill descent control switch (1) when the vehicle speed is under 25 km/h (15 mph). The hill descent control indicator on the instrument cluster will come on and the hill descent control system will be activated.

4-wheel drive high range position

When the vehicle speed exceeds about 10 km/h (6 mph) without depressing the accelerator pedal, the hill descent control system applies the brakes automatically to maintain the vehicle speed at about 10 km/h (6 mph).

4-wheel drive low range position

When the vehicle speed exceeds about 5 km/h (3 mph) without depressing the accelerator pedal, the hill descent control system applies the brakes automatically to maintain the vehicle speed at about 5 km/h (3 mph).

- When braking, the brake/tail lights come on and the ESP® warning light blinks.
- When the vehicle speed exceeds about 40 km/h (25 mph), the hill descent control system stops functioning and the hill descent control indicator goes off. When the vehicle slows down below about 25 km/h (16 mph), the hill descent control system will be activated again and the hill descent control indicator will come on.

⚠ WARNING

- **When the hill descent control system is used continuously for a long time, the temperature of the brake system may increase and the hill descent control system may be deactivated temporarily to protect the device of the brake system. The hill descent control indicator blinks to let you know the system is deactivated. Depress the brake pedal and stop the vehicle in a safe place. When the temperature of the brake system goes down, the hill descent control indicator will come on and the system is activated again.**
- **The hill descent control system may be activated when the gearshift lever is in "N" (Neutral) position, but engine braking will not work. Always use the hill descent control system with the gearshift lever in a forward gear or reverse gear.**
- **When using the hill descent control system, push the hill descent control switch and make sure that the hill descent control indicator light comes on and no warning message are indicated on the information display.**

⚠ CAUTION

During hill descent control system operation, Dual Sensor Brake Support II (DSBS II) may not activate depending on the amount of accelerator operation. For detail, refer to "Dual Sensor Brake Support II (DSBS II)" in this section.

NOTE:
You may hear a sound coming from the engine when the hill descent control system is activated. This sound is normal and does not indicate a malfunction.

To turn off the hill descent control system, push the hill descent control switch and turn off the hill descent control indicator light.

Hill descent control indicator light

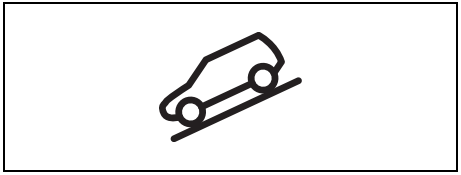

79K050

When the ignition switch is in "ON" position or the ignition mode to ON, this light comes on briefly so you can check that the light is working.

When you push the hill descent control switch and the hill descent control operating conditions are fulfilled, the hill descent control indicator comes on. If the hill descent control indicator blinks, the hill descent control will not be activated.

If hill descent control indicator light comes on while not operating the hill descent control switch, or the indicator light does not come on after the switch is pushed, there is a problem in this system. Have your vehicle inspected by an authorized SUZUKI dealer or a qualified workshop.

NOTE:
If the hill descent control indicator blinks when you push the hill descent control switch, check the following conditions.
- *The transfer lever is in 4-wheel drive high range position ("4H") or 4-wheel drive low range position("4L")*
- *The gearshift lever is in a forward gear or reverse gear*
- *The vehicle speed is under 25 km/h (15 mph)*
- *The brake system is under normal operating temperature*

NOTE:
If any of the following conditions occur, there may be a problem with the hill descent control system or the ESP® system. Have your vehicle inspected by an authorized SUZUKI dealer or a qualified workshop.
- *The hill descent control indicator does not come on or blink when you push the hill descent control switch.*
- *The hill descent control indicator stays on when driving without pushing the hill descent control switch.*



85U020350

"HILL HOLD DISABLE"

If the message shown in the above illustration appears on the information display, master warning indicator light blinks and the interior buzzer beeps, there may be a problem with the hill descent control system and the hill hold control system. Have your vehicle inspected by an authorized SUZUKI dealer or a qualified workshop.

NOTE:
You cannot activate the hill descent control system while this message is displayed.

Hill hold control system

The hill hold control system is designed to assist you in starting to move up hills. When you start to move up a hill, the system helps prevent the vehicle from rolling downward (for approximately 2 seconds) while you move your foot from the brake pedal to the accelerator pedal.

⚠ WARNING

- **Do not rely excessively on the hill hold control system. The hill hold control system may not prevent the vehicle from rolling downward on a hill under all load or road conditions. Always be prepared to depress the brake pedal to prevent the vehicle from rolling downward. Failure to pay attention and depress the brake pedal to hold the vehicle on a hill when necessary, may result in loss of control or an accident.**
- **The hill hold control system is not designed to stop the vehicle on a hill.**

(Continued)

⚠ WARNING

(Continued)

- **After you release your foot from the brake pedal, accelerate the vehicle to move up immediately. If you release your foot from the brake pedal over 2 seconds, the hill hold control system will be canceled. If so, the vehicle may roll downward, which can result in an accident depending on the degree of slope. And, the engine may stall and the power assist for the steering and brakes will not work so steering and braking will be much harder than usual which can result in an accident or vehicle damage.**
- **If you drive on the steep slope, the gravel, the snow-covered road, or the muddy road and the hill hold control system is activated, there may be a possibility that the wheels will be locked and then the vehicle may lose the control.**

The hill hold control system activates for a maximum of about 2 seconds if your foot is moved from the brake pedal when the following conditions are all met.

1) The gearshift lever is in a forward gear or reverse gear.
2) The parking brake is released.
3) The vehicle is on an upward incline.

NOTE:
When the hill hold control system is activated, the following conditions may be found, but this is not a malfunction.

- You may hear a sound from the engine room.
- As brake pedal becomes heavy, it may be difficult for you to depress it.



85U020350

"HILL HOLD DISABLE"

If the message shown in the above illustration appears on the information display, master warning indicator light blinks and the interior buzzer beeps, there may be a problem with the hill descent control system and the hill hold control system. Have your vehicle inspected by an authorized SUZUKI dealer or a qualified workshop.

NOTE:
The hill hold control system will not activate while this message is displayed.

How to turn off Hill hold control system

When driving on a steep slope, or a slippery road (icy, snow-covered, muddy, etc), it is possible to deactivate the hill hold control system.

To deactivate the hill hold control system:

1) Make sure that the gear shift lever is in "N" (Neutral) position for manual transmission vehicles and automatic transmission vehicles.
2) Shift the transfer lever from 4-wheel high range position ("4H") to 4-wheel low range position ("4L").

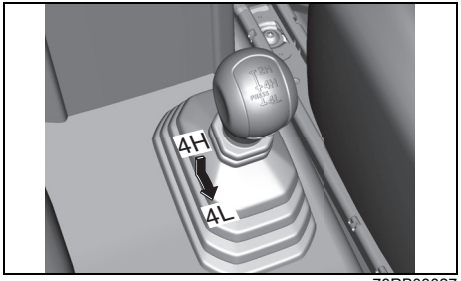

78RB03027

3) When the ESP® OFF switch is pushed and held to turn off the ESP® system (other than ABS), the message is shown on the information display and the hill hold control system is deactivated.

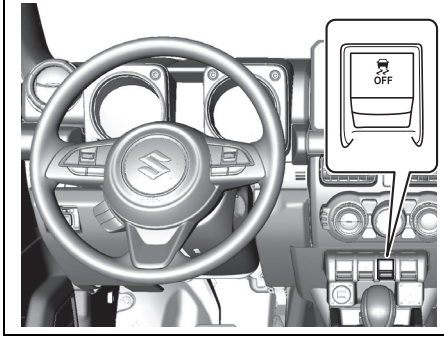

85U020360



85U020350

"HILL HOLD DISABLE"

NOTE:

- *When the ESP® OFF switch is pushed again, the hill hold control system is activated again.*
- *When the hill hold control system is deactivated and the transfer lever is shifted from "4L" position to "4H" position, the hill hold control system is activated again.*
- *When the hill hold control system is deactivated, hill descent control system is also deactivated.*

MEMO

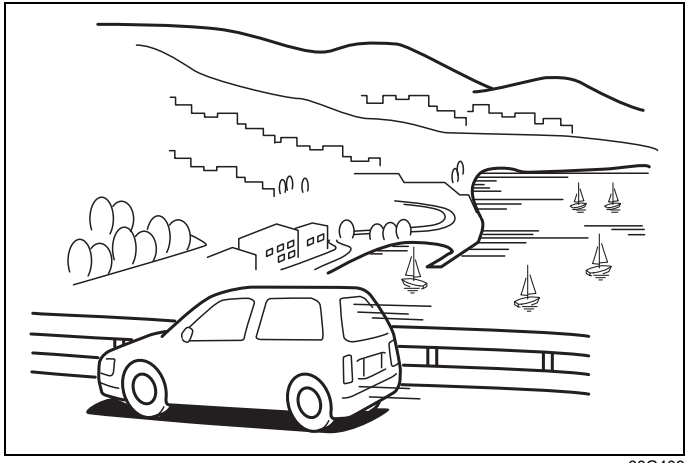

60G409

DRIVING TIPS

Important Vehicle Design Features to Know 4-1
On-Paved Road Driving 4-2
Off-Road Driving 4-4
Precaution for handling vehicle 4-8
Running-in 4-11
Catalytic converter 4-11
Improving fuel economy 4-12
Highway driving 4-13
Driving on hills 4-13

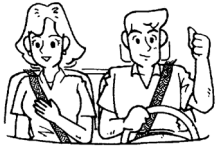

52D078

⚠ WARNING

- **Fasten your seat belts at all times. Even though airbags are equipped at the front seating positions, the driver and all passengers should be properly restrained at all times, using the seat belts provided. Refer to "Seat belts and child restraint systems" section for instructions on proper use of the seat belts.**
- **Never drive under the influence of alcohol or other drugs. Alcohol and drugs can seriously impair your ability to drive safely, greatly increasing the risk of injury to yourself and others. You should also avoid driving when you are tyred, sick, irritated or under stress.**

Important Vehicle Design Features to Know

⚠ WARNING

Your multipurpose vehicle has handling characteristics that differ from those of a conventional passenger car. For the safety of you and your passengers, please read the following section very carefully.

Multipurpose vehicles such as your new SUZUKI have higher ground clearance and a narrower track than conventional passenger cars, to make them capable of performing in a wide variety of off-road applications. Specific design characteristics give them a higher center of gravity than ordinary cars. An advantage of the higher ground clearance is a better view of the road allowing you to anticipate problems. They are not designed for cornering at the same speed as conventional passenger cars any more than low-slung sports cars are designed to perform satisfactorily under off-road conditions. If at all possible, avoid sharp turns or abrupt maneuvers. As with other vehicles of this type, failure to operate this vehicle correctly may result in loss of control or vehicle rollover. Multipurpose vehicles have a significantly higher rollover rate than other types of vehicles. In a rollover collision, an unbelted person is significantly more likely to die than a person wearing a seat belt.

Important Differences Between Your Multipurpose Vehicle and Ordinary Passenger Cars

Higher Ground Clearance

The higher ground clearance of your vehicle enables it to clear off-road obstacles, such as rocks and tree stumps, that ordinary passenger cars cannot drive over. An unavoidable result of this higher ground clearance is that the vehicle also has a higher center of gravity. Consequently, your vehicle will handle differently than a vehicle with a lower center of gravity.

Shorter Wheelbase

Along with its higher ground clearance, your vehicle has a shorter wheelbase and shorter front and rear overhangs than the typical passenger car. These features combine to allow you to drive your vehicle over hillcrests without hanging up on them or damaging the frame and chassis components. The shorter wheelbase also makes the steering of your vehicle more responsive than that of vehicles with longer wheelbases.

Narrower Body Width and Track
Your vehicle is narrower than the average passenger car so that it can pass through tight spaces. Without the essential characteristics described above: higher ground clearance, shorter wheelbase, and narrower body width and track -your vehicle could not provide you with excellent off-road driving performance. However, it is also true that on-road driving, handling, and steering will be different from what drivers experience with a conventional passenger car.

On-Paved Road Driving

The data of accidents show that most rollover accidents for multi-purpose vehicles are caused when a driver loses control of the vehicle and leaves the paved portion of the roadway striking a ditch, curb or other off-road object that causes the vehicle to overturn. The following driving practices may reduce the risk of rollover.

Vehicle Slides Off-Road

You can reduce the risk of this kind of rollover accident by always keeping the vehicle under control. Typically, drivers lose control of vehicles, often resulting in rollover accidents, when the driver is impaired because of alcohol or other drugs, falls asleep at the wheel or is otherwise inattentive, or is driving too fast for the road conditions.

Rollovers On the Roadway

If, for any reason, your vehicle slides sideways or spins out of control at highway speeds, while on the paved portion of the roadway, the risk of rollover is greatly increased. This condition can be created when two or more wheels drop off onto the shoulder and you steer sharply in an attempt to reenter the roadway. To reduce the risk of rollover in these circumstances, if conditions permit, you should hold the steering wheel firmly and slow down before pulling back into the travel lanes with controlled steering movements.

All Types of Rollover Accidents

As with many kinds of automobile accidents, rollovers can be greatly reduced by doing what all prudent drivers should do, i.e., don’t drink and drive, don’t drive when tired and don’t do anything behind the wheel that could cause a loss of attention to the driving task.
Additional guidelines are set out below for your on-road driving.

Know Your Vehicle

Take time to familiarize yourself with the unique handling characteristics of your vehicle by first driving around in an area away from traffic. Practice turning the vehicle at a variety of speeds and in different directions. Get a feel for the greater steering response that your vehicle has over a conventional car.

Wear Your Seat Belts at All Times

The driver and all passengers should be properly restrained at all times, using the seat belts provided. Refer to the “Seat belts and child restraint systems” in the “FOR SAFE DRIVING” section for instructions on proper use of the seat belts.

Don’t Make Sharp Turns

As mentioned before, small multipurpose vehicles have specific design characteristics that allow them to perform in a wide variety of applications. These characteristics also change the cornering behavior relative to conventional passenger cars.
Remember, small multipurpose vehicles have more responsive steering and a higher center of gravity than conventional passenger cars. If at all possible, avoid making sharp turns in your vehicle.

Slow Down on Curves

Learn to approach curves cautiously and at a conservative speed. Do not attempt to take curves at the same speeds that you would in a vehicle with a lower center of gravity. Just as you would not drive a sports car on a trail, you should not attempt to drive your vehicle around curves like a sports car.

Slow Down and Use Caution on Slippery Roads

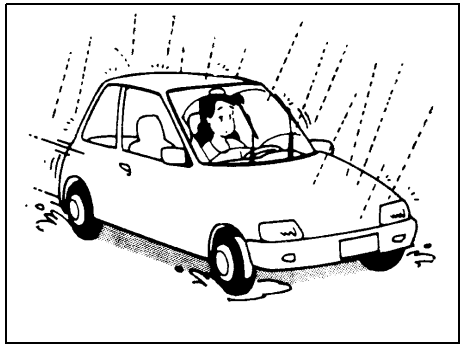

60G089A

Under wet road conditions you should drive at a lower speed than on dry roads due to possible slippage of tyres during braking. When driving on icy, snow-covered, or muddy roads, reduce your speed and avoid sudden acceleration, abrupt braking, or sharp steering movements. Use 4-wheel drive high range (4H) for better traction.

NOTICE

Never operate your vehicle in "4H" or "4L" on dry pavement and, as much as possible, avoid using "4H" or "4L" on wet pavement, as this puts severe stress on the drive train, especially during tight cornering, and can damage it. Also, you may have some difficulty in steering.

Off-Road Driving

Your vehicle has specific design characteristics for off-road driving. When you leave the paved road, you will encounter driving surfaces of all kinds which may change continually as you drive. In most cases, off-road driving requires the use of 4-wheel drive.

Use Caution on Steep Inclines

Always inspect hills before you attempt to drive up them. Know what is on the other side and how you will get back down. If you have any doubt that it is safe, do not attempt to drive over a hill. Never drive your vehicle up an extremely steep incline. Coming down a steep hill can be trickier than getting up one. Keep the vehicle heading straight down the hill and use low gear. Do not lock the brakes. If the vehicle begins to slide, accelerate slightly to regain steering control.

Do not Drive Across the Side of Hills

Driving across the side of a hill can be extremely hazardous. Most of the vehicle's weight will be transferred to the downhill tyres, which could result in the vehicle rolling sideways. Whenever possible, avoid this potential hazard. Also, if you have to exit your vehicle on a side-hill, always get out on the uphill side.

Wear Your Seat Belts at All Times

You and your passengers should use the seat belts at all times when driving off-road. For proper seat belt use, refer to the "Seat belts and child restraint systems" in the "FOR SAFE DRIVING" section in this manual.

Avoid Sudden Reactions in Mud, Ice, or Snow

Be careful when off-road conditions are slippery. Reduce your speed and avoid sudden movements of the vehicle. Be aware that driving in deep snow or mud can cause a loss of traction and an increase in the resistance to the vehicle's forward motion. Use 4WD low gear (4L) and maintain a steady but moderate speed with a light touch on the steering wheel and brakes.

Snow chains

Snow chains should only be used if they are needed to increase traction or are required by law. Check that the chains you use are the correct size for your vehicle's tyres.
Also check that there is enough clearance between the fenders and the chains as installed on the tyres.
Install the chains on the rear tyres tightly, according to the chain manufacturer's instructions. Retighten the chains after driving about 1.0 km (1/2 mile) if necessary. With the chains installed, drive slowly.

⚠ WARNING

If a snow chain is attached, the tyre rota-tion speed may not be detected and the following functions may not work properly.
- **Some functions of SUZUKI SAFETY SUPPORT**

NOTICE

If you hear the chains hitting against the vehicle body while driving, stop and tighten them.

Do not drive in the field covered with grown grass

If you drive in the field covered with grass, it may cause accident or vehicle damage by getting caught in grown grass.

If Your Vehicle Gets Stuck

If your vehicle gets stuck in snow, mud, or sand, follow the directions below:

1) Shift the transfer shift lever into the "4L" position.
2) Shift the transmission back and forth between a forward range (or first gear for manual transmission) and reverse. This will create a rocking motion which may give you enough momentum to free the vehicle. Press gently on the accelerator to keep wheel spin to a minimum. Remove your foot from the accelerator while shifting.
   Do not race the engine. Excessive wheel spin will cause the tyres to dig deeper, making it more difficult to free the vehicle.
3) If your vehicle remains stuck after a few minutes of rocking, get another vehicle to pull you out.

⚠ WARNING

Do not allow anyone to stand near the vehicle when you are rocking it, and do not spin the wheels faster than an indicated 40 km/h (25 mph) on the speedometer. Personal injury and/or vehicle damage may result from spinning the wheels too fast.

NOTICE

- **Release the accelerator pedal when operating the gearshift lever or the transfer lever. Operating the gearshift lever or the transfer lever with the engine racing can damage the gears and the free axle mechanism.**
- **Do not continue rocking the vehicle for more than a few minutes. Prolonged rocking can cause engine overheating, transmission, transfer case, axles, propeller shaft or differential damage, or tyre damage.**

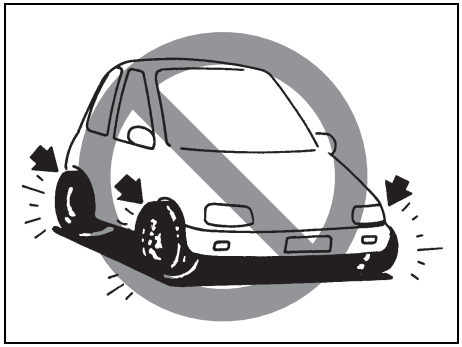

54G638

⚠ WARNING

In addition to following the driving tips in this section, it is important to observe the following precautions.

- **Check that your tyres are in good condition and always maintain the specified tyre pressure. Refer to "Tyres" in "INSPECTION AND MAINTENANCE" section for details.**

(Continued)

⚠ WARNING

(Continued)

- **Do not use tyres other than those specified by SUZUKI. Never use different sizes or types of tyres on the front and rear wheels. For information regarding the specified tyres, refer to the tyre information label located on the driver's door lock pillar.**
- **Never use oversized tyres or special shock absorbers and springs to raise (jack up) your vehicle. This will change the handling characteristics. Oversized tyres may also rub against the fender over bumps, causing vehicle damage, drive train damage or tyre failure.**
- **After driving through water, test the brakes while driving at a slow speed to see if they have maintained their normal effectiveness. If the brakes are less effective than normal, dry them by repeatedly applying the brakes while driving slowly until the brakes have regained their normal effectiveness.**

When encountering a flooded area



61M0075

Avoid driving in a flooded area or a deep puddle. If driving in a flooded area is unavoidable, go slowly in the lowest gear. In case that you have driven in a flooded area, stop the vehicle in a safe place while checking the brake effectiveness. Then, ask an authorized SUZUKI dealer or a qualified workshop to check the following inspection items.

- Function of brake
- Function of electrical components
- Changes of oil level and quality for engine, transmission and differential. In case that the oil is turbid whitely, water has been mixed in the oil and an oil change is required.
- Lubricant condition of the bearings, suspension joints, etc.

NOTICE

Avoid driving in a flooded area or a deep puddle. It may cause an engine stall, short in electrical components, engine and transmission damages, etc.

Do not drive through deep or rushing water

Driving in deep or rushing water can be hazardous. You could lose control of the vehicle and the occupants could drown. Also, your vehicle could be seriously damaged. To avoid these risks, observe the following instructions and precautions.

- Do not drive through deep or rushing water. Deep or rushing water, such as fast-moving streams or floodwaters, could carry your vehicle away from your intended path. The water is too deep if it covers your wheel hubs, axles, or exhaust tailpipe. Know the depth of the water before you attempt to drive through it.

If the vehicle goes across the river unavoidably, follow the instructions below before going across the river.

1) Confirm the depth of the river and the terrain.
2) Select the place which is less than 30cm (11.8 inch) in depth of water. Go across the river to a right angle for the river or lower part of the river
3) Drive slowly at less than 5 km/h (3.1 mph) not to raise the wave and go across the river immediately to avoid operating the gearshift lever.

If the vehicle goes across the river that is more than 30 cm (11.8 inch) in depth of water unavoidably, stop the vehicle in a safe place while checking the brake effectiveness. Then, ask an authorized SUZUKI dealer or a qualified workshop to check the following inspection items.

- Function of brake
- Function of electrical components
- Changes of oil level and quality for engine, transmission and differential. In case that the oil is turbid whitely, water has been mixed in the oil and an oil change is required.
- Lubricant condition of the bearings, suspension joints, etc.
- If water blocks the tailpipe, the engine may not start or run. If the water is deep enough to get drawn into the engine intake system, the engine will be badly damaged.
- Submerged brakes will have poor braking performance. Drive slowly and carefully. Driving slowly will also help avoid water splashing onto the ignition system, which could cause the engine to stall.
- Even when driving through shallow or still waters, drive carefully since the water may be hiding ground hazards such as holes, ditches, or bumps.

⚠ WARNING

In addition to following the driving tips in this section, it is important to observe the following precautions for on-road and off-road driving.

- **Driver and passengers should wear seat belts at all times.**
- **Do not let anyone else drive your vehicle unless they are also aware of the vehicle characteristics and handling differences described in this section.**
- **Avoid loaning your vehicle to anyone unless you accompany them.**
- **Make sure your tyres are in good condition and always maintain the specified tyre pressure. Refer to "Tyres" in the "INSPECTION AND MAINTENANCE" section for details.**
- **Do not use tyres other than those specified by SUZUKI. Never use different sizes or types of tyres on the front and rear wheels. For information regarding the specified tyres, refer to the "SPECIFICATIONS" section.**
- **Never use oversized tyres or special shock absorbers and springs to raise (jack up) your vehicle. This will raise the center of gravity of the vehicle and change its handling characteristics.**

(Continued)

⚠ WARNING

(Continued)

- **After driving through water, mud, or sandy ground, test the brakes while driving at a slow speed to see if they have maintained their normal effectiveness. If the brakes are less effective than normal, dry them by repeatedly applying the brakes while driving slowly until the brakes have regained their normal effectiveness.**
- **After extended operation in mud, sand, or water, have the brakes, bearings and joint parts etc. inspected by a SUZUKI dealer as soon as possible.**

Precaution for handling vehicle

Do not apply strong force to exterior parts

NOTICE

Do not apply strong force to the spoiler, front bumper, rear bumper, side skirts, etc. Doing so can cause damage to these exterior parts.

Be careful of uneven road surface

NOTICE

In the following cases, the bumper or the lower part of the vehicle could get damaged. Ensure proper care.

- **Entering the areas where there is uneven road surface, such as road shoulder**
- **Driving on roads with grooves, bumps or potholes**

Do not modify your vehicle illegally



69RHS184

⚠ WARNING

- **If you modify your vehicle illegally, there is a danger of a fire or an accident. Illegal modifications might adversely affect handling, performance or durability. Also, this could even violate laws and ordinances.**
  Do not install unsuitable parts to your vehicle or do not make your own adjustments or wiring.
  Such modifications also affect advanced safety equipment such as the SUZUKI SAFETY SUPPORT, and there is a danger that it may not operate properly or may operate in situations where it should not.

(Continued)

⚠ WARNING

(Continued)

- **Do not use wheels or wheel nuts other than specified SUZUKI genuine products. Doing so could lead to accidents, such as nuts loosening and the wheel coming off while driving. Also, fuel consumption and driving stability could worsen, or it could result in other malfunctions.**

NOTICE

- **When installing or removing electrical equipment such as radio equipment, navigation, audio equipment or electronic toll control equipment, consult with an authorized SUZUKI dealer or a qualified workshop. Also, do not operate electrical equipment directly from the battery terminals or connect ground wires directly. Otherwise, there is a danger of hindering the functioning of electronic components, causing fire, malfunction, battery runout, etc.**

(Continued)

NOTICE

(Continued)

- **Only a troubleshooting device designed for inspection and maintenance for this model can be connected to the vehicle's onboard diagnostics system. Connecting a device other than that specified could hinder the functioning of electronic components and cause battery runout, etc.**

(Continued)

Risk of installing electrical equipment other than SUZUKI genuine products

NOTICE

Installing electrical equipment other than SUZUKI genuine products may cause other electrical equipment to malfunction, lead to serious failure or leakage of personal information.
SUZUKI will not be responsible for any failure or damage caused by the installation of electrical equipment other than SUZUKI genuine products.

When installing, removing and repairing parts

⚠ WARNING

The SRS airbag system and the seat belt pretensioner system could activate unexpectedly or could be rendered ineffective if the parts that affect their functions are adjusted or arranged. In the following cases, these systems will be adversely affected. Consult with an authorized SUZUKI dealer or a qualified workshop beforehand.

- **When removing the steering wheel and conducting repairs around the steering wheel, etc.**
- **When conducting repairs around the center console, around the instrument cluster, under the front seats or to electrical wiring**
- **When installing audio equipment, etc.**
- **When conducting sheet metal painting or repairs around the dashboard**
- **When replacing the front seats or conducting repairs around the seats**
- **Repairs around the front pillar, the back pillar or the roof side**
- **When conducting repairs around the center pillar**

Be careful when placing accessories

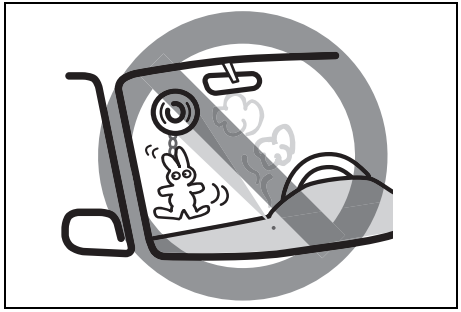

80T060120

⚠ WARNING

Do not attach accessories to the window glasses. Accessories and suction cups could hinder vision, or a suction cup could act as a lens and cause a fire. Also, if an airbag is activated, such accessories could be ejected outward within the vehicle, possibly resulting in injury.

When spilling drinks or liquids

⚠ WARNING

Do not allow liquids to spill, splash or spray inside the vehicle. The following items could malfunction, or fire could result. In the case of spilling drinks, etc., promptly consult an authorized SUZUKI dealer or a qualified workshop.

- **SRS airbag system**
- **Audio equipment**
- **Electrical parts such as switches and wiring**
- **Movable parts such as the gearshift lever or seat belt buckles**

NOTICE

The sensor of the seat belt reminder is built into the front and rear passenger's seat cushion.
If you spill liquid such as soft drinks or juice, the sensor of the seat belt reminder may be damaged.
If you spill any liquid on the seat cushion, immediately wipe it with a soft cloth.

Running-in

NOTICE

The future performance and reliability of the engine depends on the care and restraint exercised during its early life. It is especially important to observe the following precautions during the first 960 km (600 miles) of vehicle operation.

- **After starting, do not race the engine. Warm it up gradually.**
- **Avoid prolonged vehicle operation at a constant speed. Moving parts will break in better if you vary your speed.**
- **Start off from a stop slowly. Avoid full throttle starts.**
- **Avoid hard braking, especially during the first 320 km (200 miles) of driving.**
- **Do not drive slowly with the transmission in a high gear.**
- **Drive the vehicle at moderate engine speeds.**
- **Do not tow a trailer during the first 960 km (600 miles) of vehicle operation.**

Catalytic converter

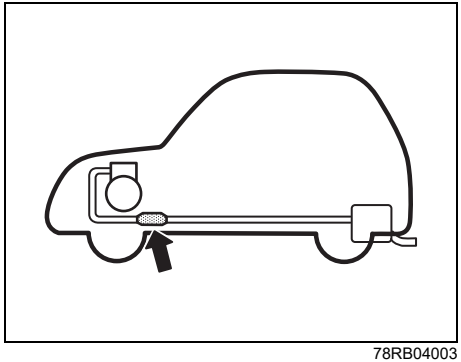

78RB04003

The purpose of the catalytic converter is to minimize the amount of harmful pollutants in your vehicle's exhaust. Use of leaded fuel in vehicles equipped with catalytic converters is prohibited, because lead deactivates the pollutant-reducing components of the catalyst system.

The converter is designed to last the life of the vehicle under normal usage and when unleaded fuel is used. No special maintenance is required on the converter. However, it is very important to keep the engine properly tuned. Engine misfiring, which can result from an improperly tuned engine, may cause overheating of the catalytic converter. This may result in permanent heat damage to the catalytic converter and other vehicle components.

NOTICE

To minimize the possibility of catalytic converter or other vehicle damage:

- **Maintain the engine in the proper operating condition.**
- **In the event of an engine malfunction, particularly one involving engine misfire or other apparent loss of performance, have the vehicle serviced promptly.**
- **Do not turn off the engine or interrupt the ignition when the transmission is in gear and the vehicle is in motion.**
- **Do not try to start the engine by pushing or towing the vehicle, or coasting down a hill.**
- **Do not idle the engine with any spark plug wires disconnected or removed, such as during diagnostic testing.**
- **Do not idle the vehicle for prolonged periods if idling seems rough or there are other malfunctions.**
- **Do not allow the fuel tank to get near the empty level.**

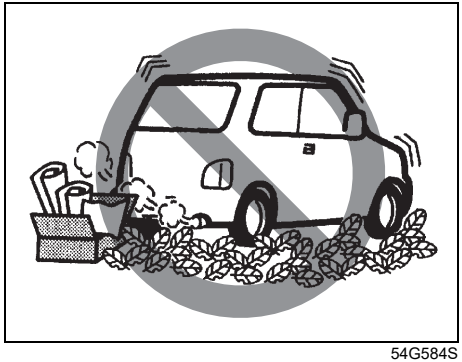

54G584S

⚠ WARNING

Be careful where you park and drive; the catalytic converter and other exhaust components can get very hot. As with any vehicle, do not park or operate this vehicle in areas where combustible materials such as dry grass or leaves can come in contact with a hot exhaust system.

Improving fuel economy

The following instructions will help you improve fuel economy.

Avoid excessive idling
If you park your vehicle for more than one minute, stop the engine and start it again later. When warming up a cold engine, do not allow the engine to idle or apply full throttle until the engine has reached operating temperature. Allow the engine to warm up by driving.

Avoid fast starts
Fast starts away from lights or stop signs will consume fuel unnecessarily and shorten engine life. Start off slowly.

Avoid unnecessary stops
Avoid unnecessary deceleration and stopping. Try to maintain a moderate, steady speed whenever possible. Slowing down and then accelerating again uses more fuel.

Keep a steady cruising speed
Drive at a constant speed that road and traffic conditions will permit.

Keep the air cleaner clean

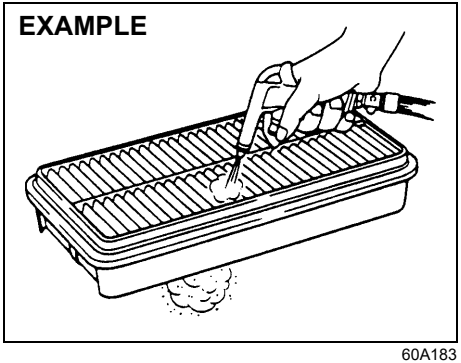

60A183

If the air cleaner is clogged with dust, there will be greater intake resistance, resulting in decreased power output and increased fuel consumption.

Keep weight to a minimum
The heavier the load is, the more fuel the vehicle consumes. Unload any unnecessary luggage or cargo.

Keep tyre pressures correct
Under-inflation of the tyres can waste fuel due to increased rolling resistance of the tyres. Keep your tyres inflated to the correct pressure shown in the label on driver's door lock pillar.

Highway driving

When driving at highway speeds, pay attention to the following:

- Stopping distance progressively increases with vehicle speed. Apply the brakes far enough ahead of the stopping point to allow for the extra stopping distance.
- On rainy days, hydroplaning can occur. Hydroplaning is the loss of direct contact between the road surface and the vehicle's tyres due to a water film forming between them. Steering or braking the vehicle during hydroplaning can be very difficult, and loss of control can occur. Keep speed down when the road surface is wet.
- At high speeds, the vehicle may be affected by side winds. Therefore, reduce speed and be prepared for unexpected buffeting, which can occur at the exits of tunnels, when passing by a cut of a hill, or when being overtaken by large vehicles, etc.

Driving on hills

Automatic transmission

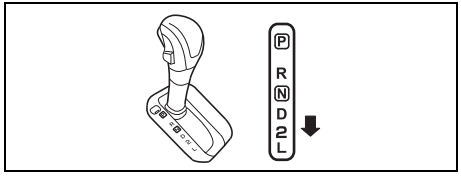

78RB04001

- When driving on steep hills, the vehicle may begin to slow down and show a lack of power. If this happens, you should shift to a lower gear so that the engine will again be operating in its higher power range. Shift rapidly to prevent the vehicle from losing momentum.
- When driving down a hill, the engine should be used for braking by shifting to the next lower gear.

⚠ WARNING

Do not hold the brake pedal down too long or too often while going down a steep or long hill. This could cause the brakes to overheat, resulting in reduced braking efficiency. Failure to take this precaution could result in loss of vehicle control.

NOTICE

When descending a downhill, Never turn the ignition key to "LOCK" position or press the engine switch to change the ignition mode to LOCK (OFF). Emission control system and automatic transmission damage may result.

OTHER CONTROLS AND EQUIPMENT

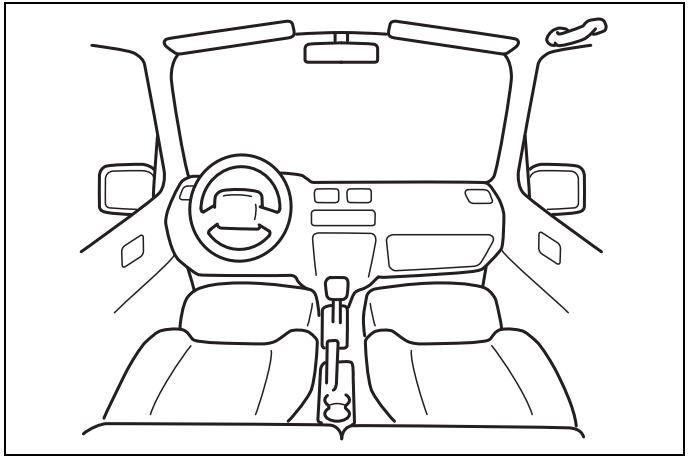

60G407

Fuel filler opening 5-1
Refueling 5-2
Engine hood 5-4
Sun visor 5-6
Interior light 5-7
Accessory socket 5-9
USB socket (if equipped) 5-10
Assist grips (if equipped) 5-10
Ride-in assist grip 5-11
Glove box 5-11
Cup holder and storage area 5-12
Footrest (if equipped) 5-15
Luggage compartment carpet 5-15
Frame hooks 5-16
Heating and air conditioning system 5-18
Manual heating and air conditioning system 5-19
Automatic heating and air conditioning system (climate control) 5-25
Radio antenna 5-32
Installation of radio frequency transmitters 5-33
Remote audio controls (if equipped) 5-33

Fuel filler opening

Make sure to read “Refueling” in this section.

⚠ WARNING

Be sure to observe the following points when refueling. Otherwise, gasoline may catch a fire from fuel and it may cause a fire.

- **Always stop the engine first.**
- **Close all the doors and windows when refueling.**
- **As gasoline is highly flammable, open sparks such as lit cigarettes are strictly prohibited.**

Fuel filler door

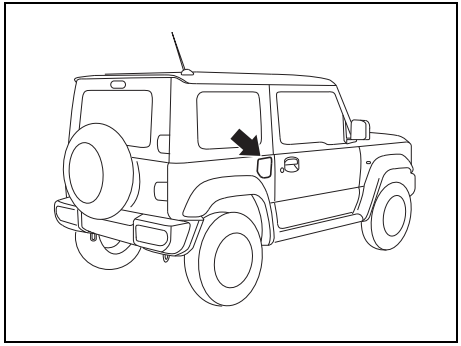

78RB05001

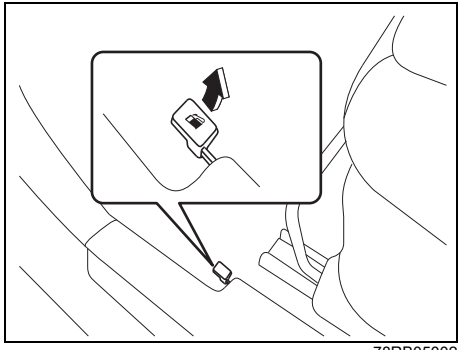

78RB05002

A fuel filler cap is located on the right rear side of the vehicle. The fuel filler door can be unlocked by pulling up the opener lever located on the outboard lower side of the driver’s seat and locked by simply closing the door.

Fuel filler cap

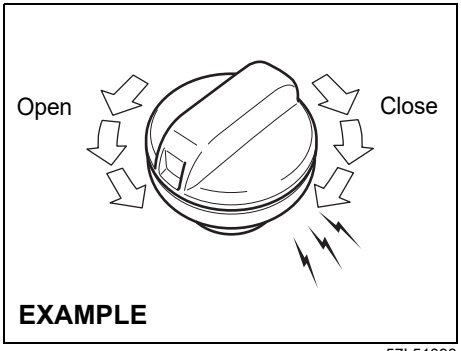

57L51093

- To open the fuel filler cap, turn it counterclockwise.
- To close the fuel filler cap, turn it clockwise until you hear more than 2 clicks.

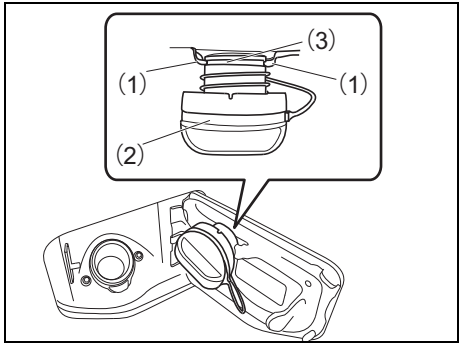

78RB05003

NOTE:
The cap holder (1) holds the fuel filler cap (2) by hooking the groove (3) when refueling.

To reinstall the fuel filler cap:
1) Turn the cap clockwise until you hear several clicks.
2) Close the fuel filler door.

⚠ WARNING

- **If you open the fuel filler cap suddenly, fuel may be under pressure and may spray out. Loosen the fuel filler cap slowly. After air deflating sound stops, open the fuel filler cap.**
- **If fuel spills out, an accident such as a fire may occur. Also, if you leave spilled fuel as it is, it may cause paint staining, discoloration or cracking. Be careful not to spill out fuel. If you spill it out, wipe it off with a soft cloth.**
- **If the fuel filler cap is not closed securely, it may cause fuel leakage or a fire. After refueling, close the fuel filler cap until you hear more than 2 clicks.**
- **If you use the fuel cap other than a genuine SUZUKI cap, it may cause fuel leakage. Do not use the fuel cap other than a genuine SUZUKI cap.**

Refueling

Watch out for fire



69RHS186

⚠ WARNING

Be sure to observe the following points when refueling. Otherwise, gasoline may catch a fire from fuel and it may cause a fire.

- **Always stop the engine first.**
- **Close all the doors and windows when refueling.**
- **As gasoline is highly flammable, open sparks such as lit cigarettes are strictly prohibited.**

When refueling at a self-service gas station

⚠ WARNING

When refueling at a self-service gas station, be sure to observe the following points.

- **If substantial static electricity is accumulated within your body, a spark could ignite fuel vapors and possibly cause burns. Before opening the fuel filler cap, discharge any static electricity* that might have accumulated in your body, by touching a metal part of the vehicle body or the gas pump machine. In addition, do not re-enter the vehicle while refueling, as static electricity could be charged to your body again.**
- **Do not allow others who have not discharged their static electricity to come close to the fuel filler opening.**

***Take special care when air is dry, as this can cause your body to become charged with static electricity more easily. In addition, wearing layers of clothing can generate static electricity due to the friction of the fibers.**

(Continued)

⚠ WARNING

(Continued)

- **If you open the fuel filler cap suddenly, fuel may be under pressure and may spray out. Loosen the fuel filler cap slowly. After air deflating sound stops, open the fuel filler cap.**
- **If you do not insert the fuel filler nozzle securely into the fuel filler opening, fuel may spill out. Insert the fuel filler nozzle securely into the fuel filler opening until it stops.**
- **Pull the gas pump filler nozzle lever until it stops.**

(Continued)

⚠ WARNING

(Continued)

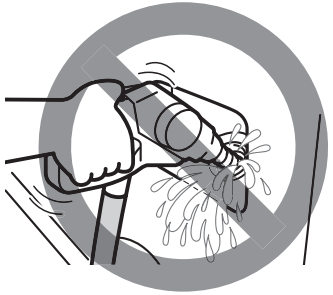

69RHS070

- **If you continue to refuel after the automatic stop to top up the tank, fuel could overflow. When the automatic stop function of gas pump filler nozzle is activated, stop refueling.**

***Depending on the type of gas pump machine being used, the automatic stop function could activate early and refueling might not be possible. Please follow the instructions of the employees at the gas station.**

(Continued)

⚠ WARNING

(Continued)
- **If fuel spills out, an accident such as a fire may occur. Also, if you leave spilled fuel as it is, it may cause paint staining, discoloration or cracking. Be careful not to spill out fuel. If you spill it out, wipe it off with a soft cloth.**
- **If the fuel filler cap is not closed securely, it may cause fuel leakage or a fire. After refueling, return the fuel filler nozzle to its original position and close the fuel filler cap until you hear more than 2 clicks.**
- **Fuel contains substances harmful to the human body. Do not breathe in vaporized fuel.**
- **In addition, be sure to observe all the warnings posted at the gas station.**

Use unleaded gasoline only

NOTICE

Using leaded gasoline, low-quality gasoline or other types of fuel (such as alcohol and diesel oil) can cause harmful effects to the engine and fuel delivery system.
Do not use fuel other than unleaded gasoline.

Engine hood

⚠ WARNING

- **As the hood is heavy, if a child tries to open or close it, the child may get injured. Do not allow a child to open or close the hood.**
- **As the engine compartment becomes hot, it may cause burns. When opening the hood, do not allow a child to come close to the hood**
- **If you leave any tool or cloth in the engine compartment, it may cause a malfunction. Also, as the engine compartment becomes hot, it may result in vehicle fire. Do not leave any tool or cloth for inspection or cleaning in the engine compartment.**

⚠ CAUTION

If you come close to a running drive belt or a cooling fan (radiator fan), hands, hair, clothing, etc. may be caught and you may get injured. When the engine is running, keep away from the drive belt or the cooling fan (radiator fan).

Opening the hood

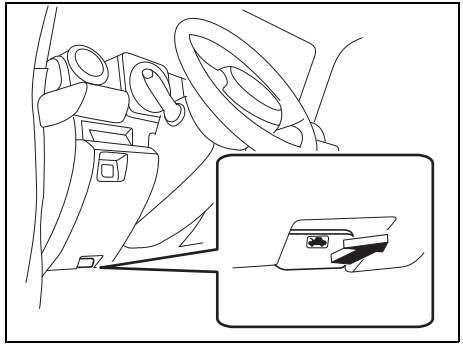

78RB05004

1) Pull the hood release handle located under the driver's side instrument panel in the outboard position. This will disengage the engine hood lock halfway.

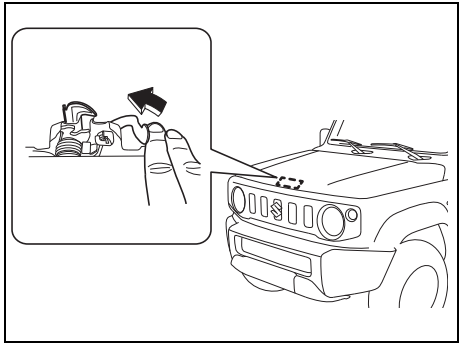

78RB05005

2) Push the under-hood release lever sideways with your finger, as shown in the illustration. While pushing the lever, lift up the engine hood.

⚠ CAUTION

The release lever and its peripheral, or engine food can be hot enough to burn your finger right after driving. Touch after those becomes cool enough.

NOTICE

Check that the wiper arms are not raised before you lift up the engine hood to avoid damaging the wiper arms and the engine hood.

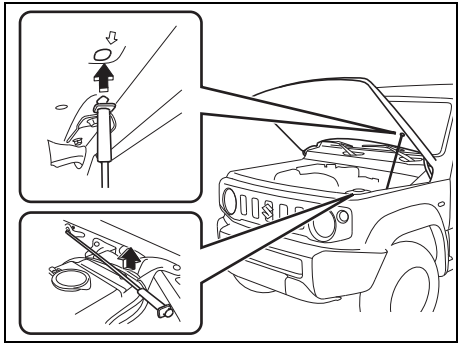

78RB05006

3) While holding the hood, pull the prop rod out from the holding clip, and then insert the end of the rod into the designated hole.

⚠ CAUTION

- **The prop rod can be hot enough to burn your finger right after driving. Touch the rod after it becomes cool enough.**
- **Insert the end of the rod into the hole securely. If the rod slips out, you may get caught in the closing hood.**
- **The rod may slip out when the hood is blown by wind. Be careful on windy days.**

Closing the hood

1) Lift the hood up slightly and remove the prop rod from the hole. Put the prop rod back into the holding clip.

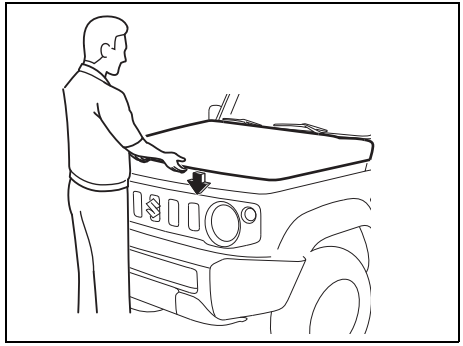

78RB05007

2) Lower the hood to about 20 cm above the hood latch, and then let it drop down. Check that the hood is securely latched after closing.

⚠ WARNING

Check that the hood is fully closed and latched before driving. If it is not, it can fly up unexpectedly during driving, obstructing your view and resulting in an accident.

⚠ CAUTION

To avoid injury, check that no part of the occupant's body such as hands or head is in the path of the hood when closing it.

NOTICE

Pushing on the hood from the top may damage it.

Sun visor

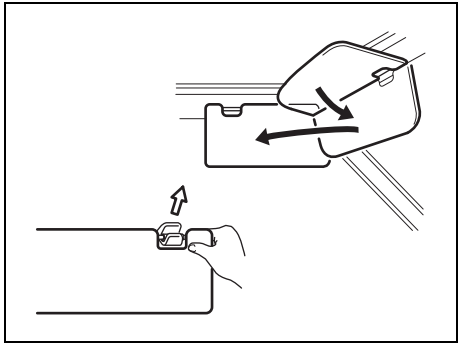

79J161

The sun visors can be pulled down to block glare coming through the windshield, or they can be unhooked and turned to the side to block glare coming through the side window.

NOTICE

When unhooking and hooking a sun visor, handle it by the hard plastic parts or the sun visor can be damaged.

Card holder (if equipped)

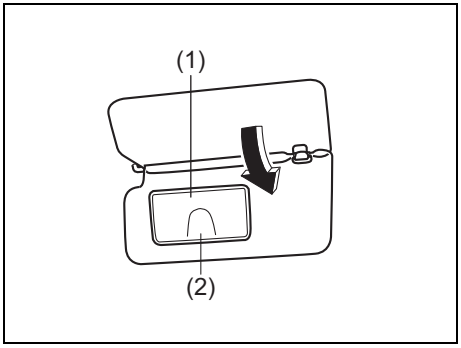

78RB05008

(1) Mirror cover
(2) Card holder

You can put a card in the card holder (2) on the back of the sun visor.

NOTICE

When you park your vehicle outdoors in direct sunlight or in hot weather, do not leave plastic cards in the holder. The heat may distort or crack them.

Vanity mirror (if equipped)

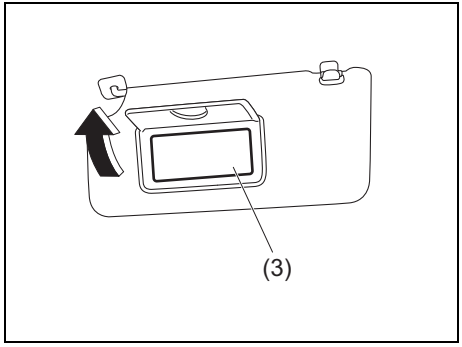

78RB05009

(3) Vanity mirror

To use the vanity mirror (3) on the back of the sun visor, pull up the mirror cover (1).

⚠ WARNING

- **Do not use the mirror while driving your vehicle or you lose control of the vehicle.**
- **When using the vanity mirror, do not move too close to a front airbag location or lean against it. If the front airbag is accidentally inflated, it could hit you hard.**

Interior light

Front

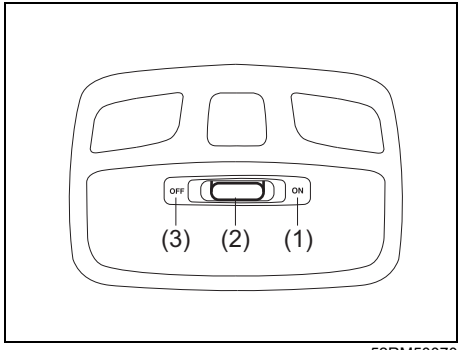

52RM50070

This light switch has three positions which function as described below:

ON (1)
The light comes on and stays on regardless of whether the door is open or closed.

NOTE:
The light will automatically be turned off to prevent the lead-acid battery from discharging when the following conditions are simultaneously met:
- *The ignition switch is in "LOCK" position, or the ignition mode is LOCK (OFF).*
- *The hazard warning lights, the position lights and the headlights are off.*
- *15 minutes passed after the light is turned on.*

DOOR (2)
The light comes on when the door is opened. After closing all doors, the light will remain on for about 15 seconds and then fade out. If you insert the key, or press the engine switch to change the ignition mode to ACC or ON during this time, the light will start to fade out immediately. After removing the key from the ignition switch or press the engine switch to change the ignition mode to LOCK (OFF), the light will turn on for about 15 seconds and then fade out.

NOTE:
The light will automatically be turned off to prevent the lead-acid battery from discharging when the following conditions are simultaneously met:
- *The ignition switch is in "LOCK" position or the ignition mode is LOCK (OFF).*
- *About 15 minutes passed after the light is turned on.*

OFF (3)
The light remains off even when the door is opened.

Luggage compartment (if equipped)

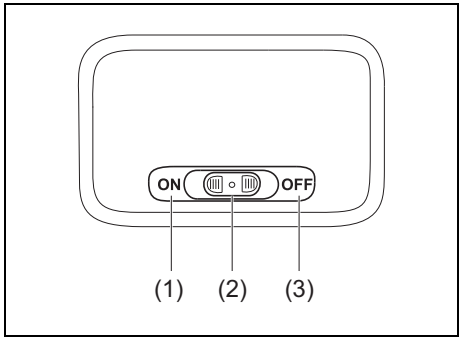

85U050300

This light switch has three positions which function as described below:

ON (1)
The light comes on and stays on regardless of whether the tailgate is open or closed.

NOTE:
The light will automatically be turned off to prevent the lead-acid battery from discharging when the following conditions are simultaneously met:
- *The ignition switch is in "LOCK" position or the ignition mode is LOCK (OFF).*
- *The hazard warning lights, the position lights and the headlights are off.*
- *15 minutes passed after the light is turned on.*

DOOR (2)
The light comes on when the tailgate is opened. After closing the tailgate, the light will remain on for about 15 seconds and then fade out. If you insert the key, or press the engine switch to change the ignition mode to "ACC" or "ON" during this time, the light will start to fade out immediately. After removing the key from the ignition switch or press the engine switch to change the ignition mode to LOCK (OFF), the light will turn on for about 15 seconds and then fade out.

NOTE:
The light will automatically be turned off to prevent the lead-acid battery from discharging when the following conditions are simultaneously met:
- *The ignition switch is in "LOCK" position or the ignition mode is LOCK (OFF).*
- *About 15 minutes passed after the light is turned on.*

OFF (3)
The light remains off even when the tailgate is opened.

NOTICE

Do not leave the tailgate open with the luggage compartment light switch in ON position for a long time, or the lead-acid battery will discharge.

NOTE:
The light will automatically be turned off to prevent the lead-acid battery from discharging when 15 minutes passed after the tailgate is opened.

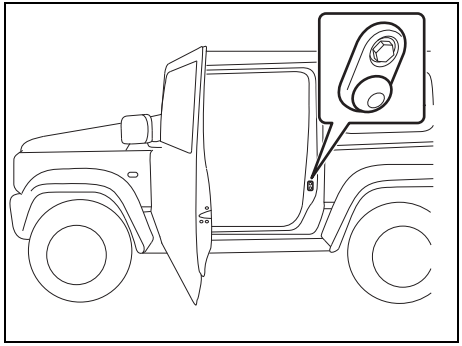

78RB05011

NOTE:
The number of doors involved in the lighting operation of the interior light depends on the vehicle specification. If there is a switch (rubber protrusion) at the door opening as shown, the door is involved in the lighting operation. The tailgate is also involved in this operation even without the rubber protrusion.

Accessory socket

Center console (if equipped)

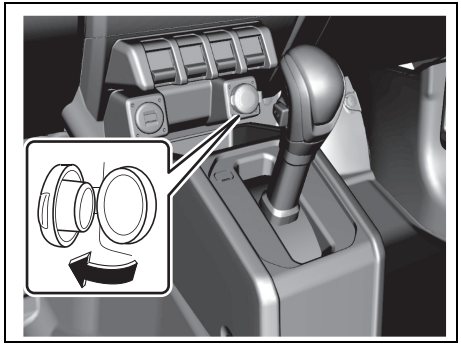

78RB05012

Luggage compartment (if equipped)

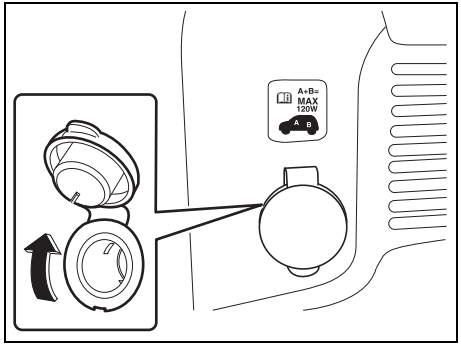

78RB05013

The accessory socket will work when the ignition switch is in “ACC” or “ON” position or the engine switch is in ACC or ON mode.
This socket can be used to provide 12 volt/120 watt/10 ampere power for electrical accessories. Check that the rubber cap remains on the socket when the socket is not in use.

NOTICE

- **To prevent the fuse from being blown, when using sockets at the same time, do not exceed the total combined power capacity of 12 volt/120 watt/10 ampere.**
- **Use of inappropriate electrical accessories can cause damage to your vehicle's electrical system. Check that any electrical accessories you use are designed to plug into this type of socket.**
- **Check that the cap remains on the socket when the socket is not in use.**
- **When the ignition switch is in "LOCK" position or the ignition mode is LOCK (OFF) during using the accessory socket, the following accidents may occur;**
  - **– the audio does not turn off.**
  - **– the keyless entry system does not work, etc.**

If they occur, disconnect the item from the accessory socket and check whether the electrical equipments work properly.
If the problem persists, ask an authorized SUZUKI dealer or a qualified workshop to have the system inspected.

USB socket (if equipped)

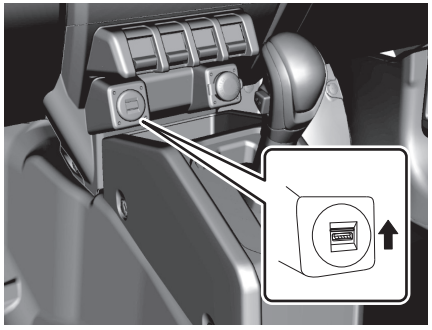

78RB05014

Connect your portable digital music player, etc. to this socket to enjoy music through the vehicle's audio system.

NOTICE

Always close the cover when not in use, since entry of foreign material, dust, water, conductive liquids may damage the audio system or USB device.

Assist grips (if equipped)

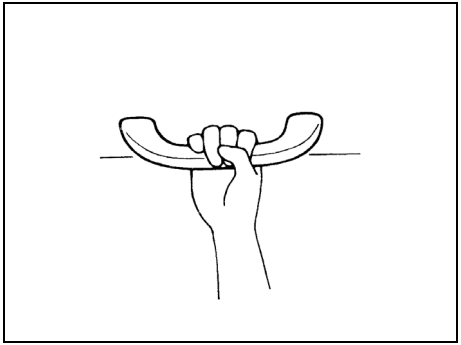

60B110A

Assist grips are provided for convenience.

NOTICE

To avoid damaging the assist grip and the molded headlining, do not hang down the assist grip.

Ride-in assist grip

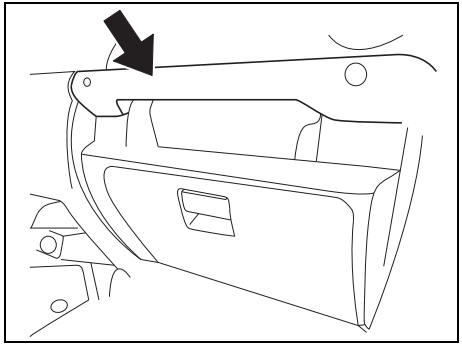

78RB05055

Ride-in assist grip provides solid support for the front passenger when entering or exiting the vehicle.

⚠ WARNING

- **Do not put any objects between the passenger side of the dashboard and the ride-in assist grip. When the passenger's airbag is inflated, objects may be flown toward the passenger and may cause serious injury.**
- **Front passenger should not grip the ride-in assist grip while seating. In this situation, the passenger would be too close to the the inflating airbag, and may suffer severe injury.**

Glove box

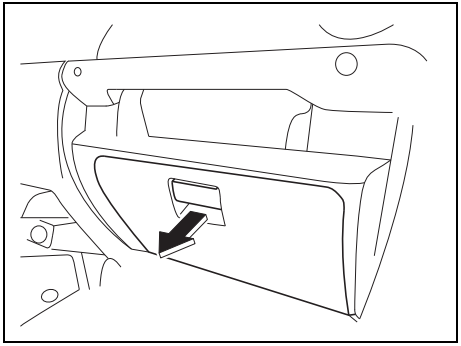

78RB05015

To open the glove box, pull the latch lever. To close it, push the lid until it latches securely.

⚠ WARNING

Never drive with the glove box lid open. It could cause injury if an accident occurs.

⚠ WARNING

Do not leave cigarette lighters or spray cans in the glove box. If a cigarette lighter or spray can is in a place such as the glove box, it may light accidentally when luggage is loaded, causing a fire.

Cup holder and storage area

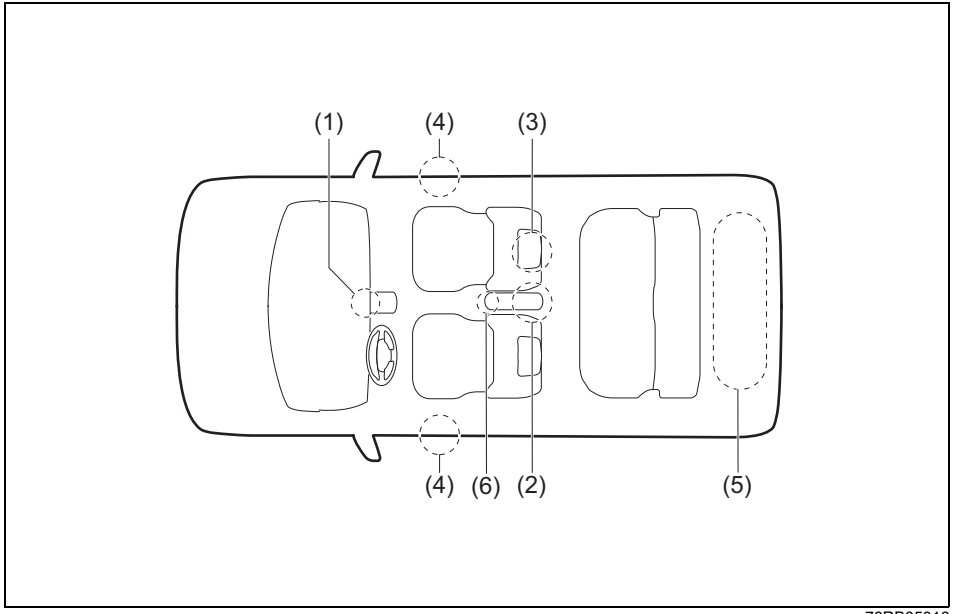

78RB05016

(1) Instrument panel tray
(2) Cup holder
(3) Front seat back pocket
(4) Front door pocket
(5) Luggage box (if equipped)
(6) Center console pocket

Instrument panel tray(1)

⚠ WARNING

Do not place any objects which may fall out from the tray when the vehicle is moving.
Failure to take the precaution may result in an object interfering with the pedals and causing a loss of vehicle control or an accident.

Cup holder (2)

Use the rear cup holder to put a cup with a lid or a bottle with a cap. Also, you can put small articles in the rear cup holder.

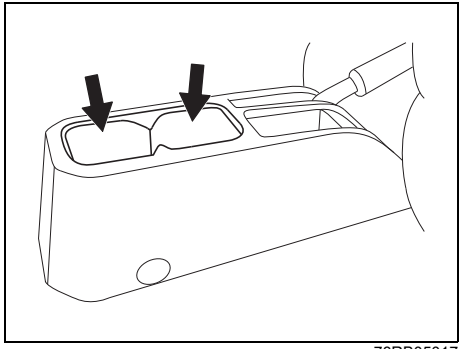

78RB05017

⚠ WARNING

Failure to take the precautions listed below could cause personal injury or vehicle damage.

- **Be careful when you are using the cup holders to hold a cup containing hot liquid. Spilling out hot liquid can cause burn injury.**
- **Do not use the cup holders to hold sharp-edged, hard or breakable objects. Objects in the cup holders may be thrown about during a sudden stop or impact, and could cause personal injury.**
- **Be careful not to spill liquid or insert any foreign materials into the moving part of the gearshift lever, or any electrical components. Liquid or foreign materials may damage these parts.**
- **If you spill, or drop liquid accidentally, have your vehicle inspected by an authorized SUZUKI dealer or a qualified workshop.**

Front seat back pocket (3)

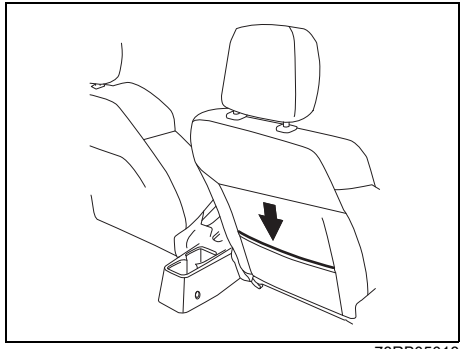

78RB05018

This pocket is provided for holding light and soft things such as gloves, newspapers or magazines.

⚠ CAUTION

Do not put hard or breakable objects in the pocket. If an accident occurs, objects such as bottles, cans, etc. can injure the occupants in the rear seat.

Front door pocket (4)

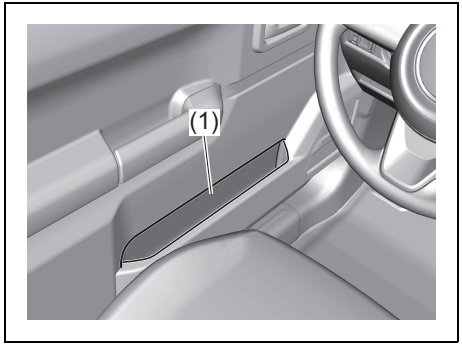

78RB05068

(1) Front door pocket

This pocket is provided for holding light and soft things such as gloves, newspapers or magazines.

⚠ CAUTION

Do not put hard or breakable objects in the pocket. If an accident occurs, objects such as bottles, cans, etc. can injure the occupants in the door pocket.

Luggage box (5) (if equipped)

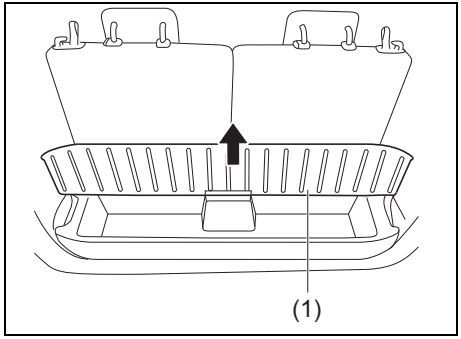

78RB05021

The luggage box (1) is equipped in the luggage compartment. You can place luggage or other cargos under the board.

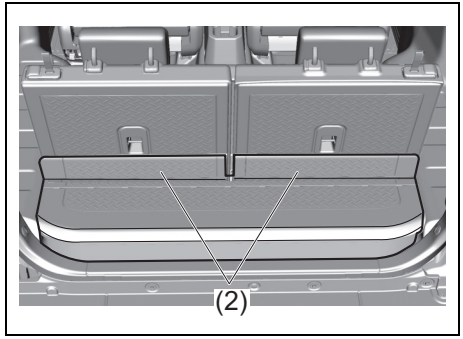

78RB05069

NOTICE

If the rear seatback is raised with heavy objects on the flap (2) of the luggage box, the luggage box may be damaged. Remove heavy objects before raising the rear seatback.

Center console pocket (6)

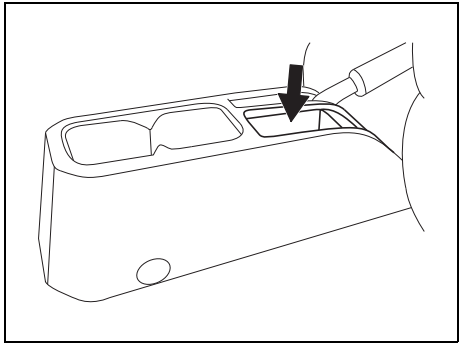

78RB05070

Use the pocket to put small articles in the center console pocket.

⚠ WARNING

Do not place any objects which may fall out from the pocket when the vehicle is moving. Failure to take the precaution may result in objects interfering with the pedals and causing a loss of vehicle control or an accident.

Footrest (if equipped)

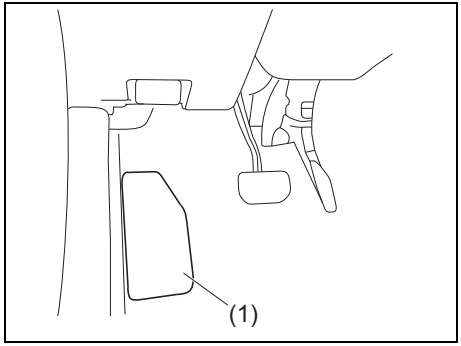

78RB05019

Use the footrest (1) as a support for your left foot and body.

Luggage compartment carpet

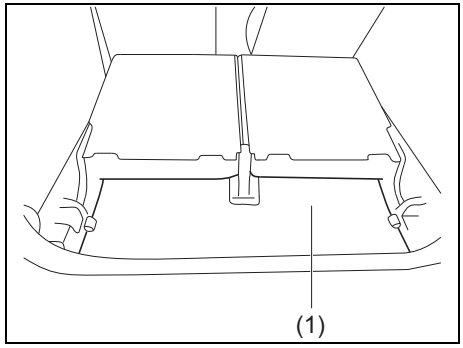

78RB05022

There is a tool box under the luggage compartment carpet (1) in the luggage compartment. You can place luggage or other cargos on the board.

⚠ WARNING

The luggage areas do not feature a structure that can accommodate people. Do not allow a child to ride in such areas. Otherwise, there is the danger of accidents due to sudden braking, etc. Do not let a child play in luggage areas even while the vehicle is stopped on the road.

Frame hooks

It is not recommended that you use the frame hooks for towing another vehicle. They were originally designed to tow your vehicle in emergency situation.
If your vehicle needs to be towed in an emergency, refer to “Towing your vehicle (recreational vehicle)” in “EMERGENCY SERVICE” section.

⚠ WARNING

Observe the following instructions when using frame hooks. The frame hook or vehicle body may break and cause serious injury or damage:
- **Do not use the frame hooks for towing another vehicle.**
- **Avoid pulling the vehicle to get out of severe snowy, muddy or sandy conditions, sudden starts or erratic driving maneuvers which could cause excessive stress on the frame hook.**

In such case, we recommend that you contact a professional service.

Front

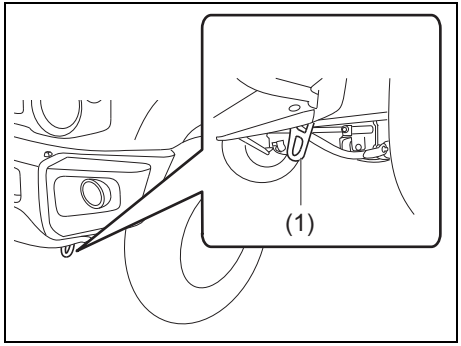

78RB05023

NOTICE

When you use the frame hook (1), avoid the driving that gives significant physical shock on hook. Such operation can damage the hook, or the vehicle body. Do not sudden accelerate.

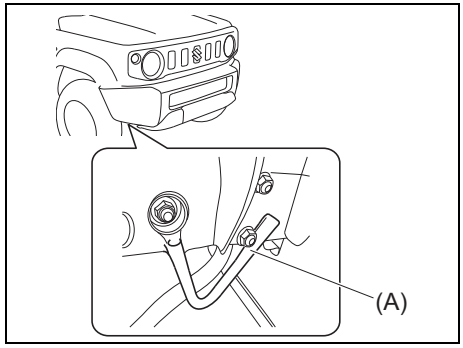

78RB05054

The hook (A) is provided for trailer/train/sea shipping purposes only.

NOTICE

Do not use the hook (A) in emergency situation. If you use this hook (A), the hook or the vehicle may be damaged.

Rear

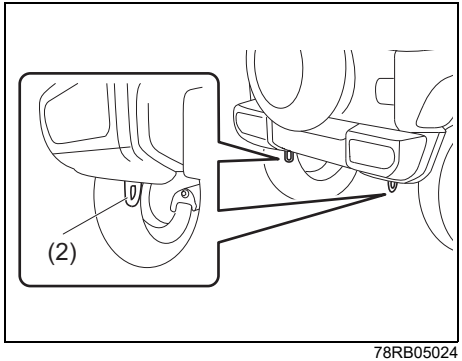

78RB05024

NOTICE

When you use the frame hook (2), avoid the driving that gives significant physical shock on hook. Such operation can damage the hook, the vehicle body or the drive system.

- **Do not sudden accelerate.**
- **Do not tow the vehicle heavier than your vehicle.**

Heating and air conditioning system

There are two types of heating and air conditioning systems as follows:

- Manual heating and air conditioning system
- Automatic heating and air conditioning system (climate control)

Air outlet

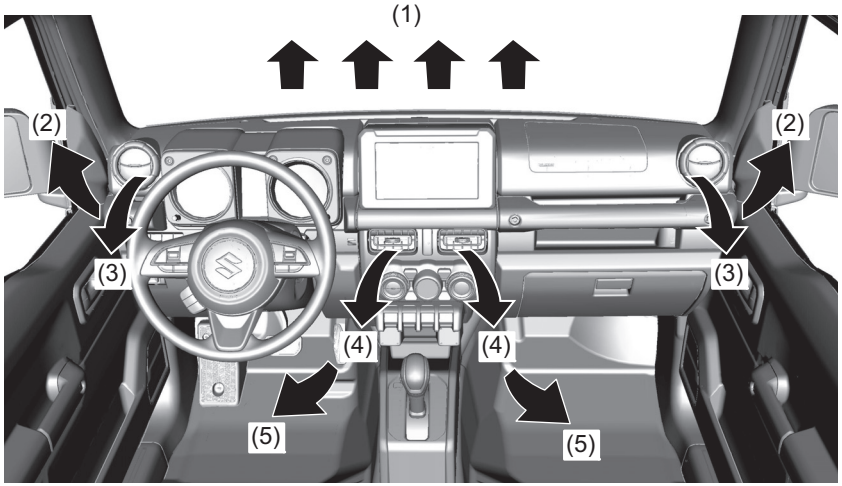

EXAMPLE

78RB05025

(1) Windshield defroster outlet
(2) Side defroster outlet
(3) Side outlet
(4) Center outlet
(5) Floor outlet

Center outlet

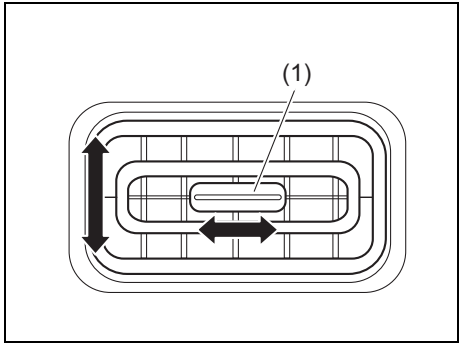

78RB05027

Move the knob (1) vertically or horizontally, to adjust the direction of airflow as desired.

Side outlet

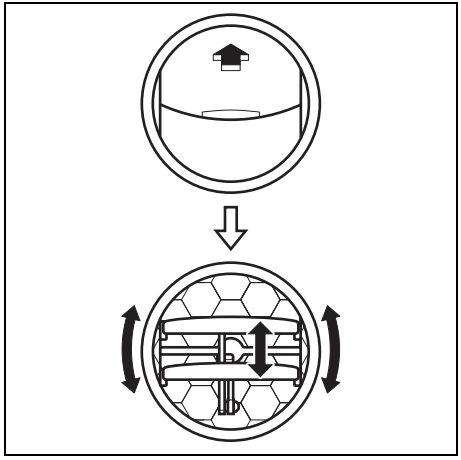

78RB05026

When open, air comes out regardless of the air flow selector position.

⚠ CAUTION

Prolonged exposure to hot air from the heater or air conditioner could result in low temperature burns. All vehicle occupants, particularly children, the elderly, those with special needs, individuals with delicate skin, and sleeping individuals, should maintain sufficient distance from the air outlets to prevent prolonged exposure to hot airflow.

Manual heating and air conditioning system

Description of controls

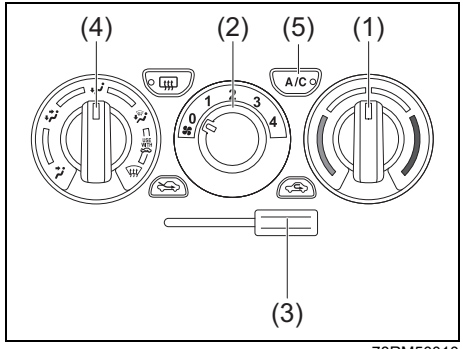

78RM50010

Temperature selector (1)
This is used to adjust the temperature.

Blower speed selector (2)
This is used to turn on the blower and to select blower speed.

Air intake selector (3)

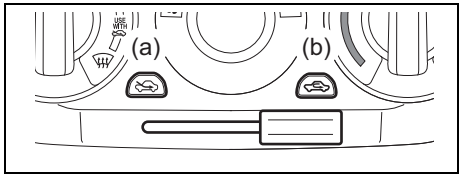

78RM50020

This selector is used to select the following modes.

FRESH AIR (a)
When this mode is selected by moving the lever to the position of (a) in the above illustration, outside air comes in.

RECIRCULATED AIR (b)
When this mode is selected by moving the lever to the position of (b) in the above illustration, inside air is recirculated. This mode is suitable when driving through dusty or polluted air such as in a tunnel, or when attempting to quickly cool down or warm up the interior.

NOTE:
If you select RECIRCULATED AIR for an extended period of time, the air in the vehicle may become contaminated.
Therefore, you should occasionally select FRESH AIR.

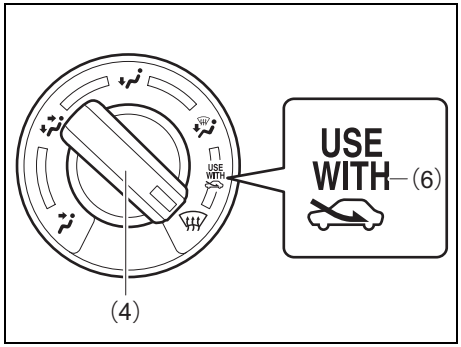

52RS50180

NOTE:
The mark of "USE WITH" (6)
To clear fog on the windshield and/or the side windows quickly, set the air flow selector (4) to "HEAT & DEFROST" or "DEFROST" and air intake selector (3) to "FRESH AIR". These positioning will clear the fogged windshield and/or the side windows faster than the "RECIRCULATED AIR".

Air flow selector (4)

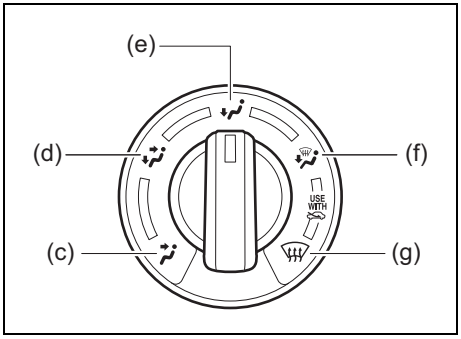

52RM50250

This is used to select one of the following functions.

VENTILATION (c)

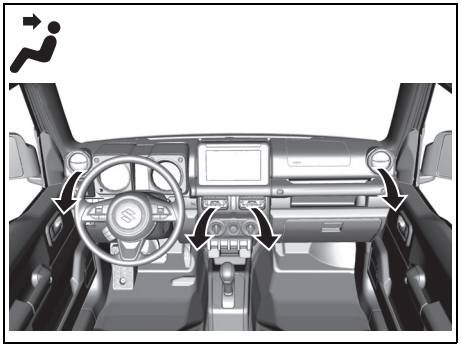

78RB05030

Temperature-controlled air comes out of the center and side air outlets.

BI-LEVEL (d)

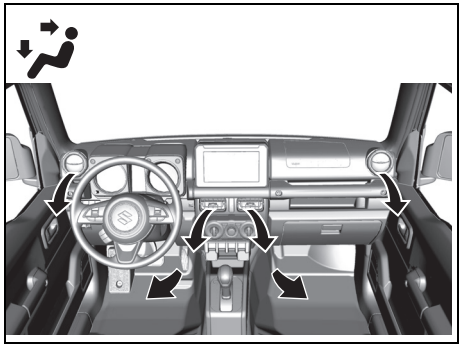

78RB05031

Temperature-controlled air comes out of the floor outlets and cooler air comes out of the center and side outlets. When the temperature selector (1) is in the fully cold position or fully hot position, however, the air from the floor outlets and the air from the center and side outlets will be the same temperature.

HEAT (e)

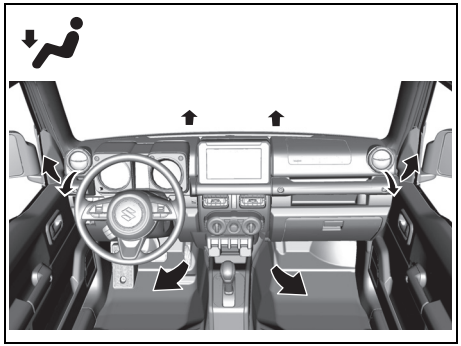

85U050230

Temperature-controlled air comes out of the floor outlets and the side outlets, also comes out of the windshield defroster outlets and also comes slightly out of the side defroster outlets.

HEAT & DEFROST (f)

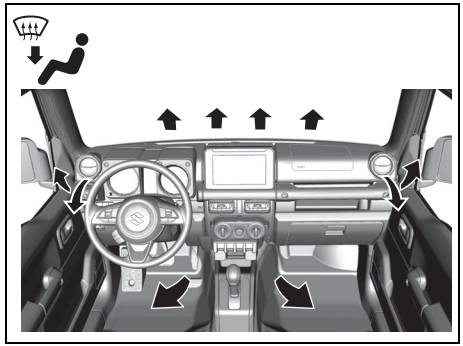

85U050240

Temperature-controlled air comes out of the floor outlets, the windshield defroster outlets, the side defroster outlets and the side outlets.

DEFROST (g)

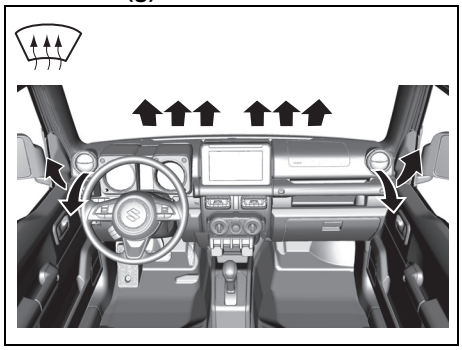

85U050250

Temperature-controlled air comes out of the windshield defroster outlets, the side defroster outlets and the side outlets.

Air conditioning switch (5)

To turn on the air conditioning system, set the blower speed selector to a position other than off and push in “A/C” switch. With this “A/C” switch operation, a indicator light will come on when the air conditioning system is working. To turn off the air conditioning system, push “A/C” switch again.

During operation of the air conditioner, you may notice slight changes in engine speed. These changes are normal, the system is designed so that the compressor turns on or off to maintain the desired temperature.

Less operation of the compressor results in better fuel economy.

System operating instructions

Natural ventilation

Select VENTILATION and FRESH AIR, the temperature selector to the desired temperature position, and the blower speed selector to off. Fresh air will flow through the vehicle during driving.

Forced ventilation

The base settings are the same as for natural ventilation except you set the blower speed selector to a position other than off.

Normal heating (using outside air)

Select HEAT and FRESH AIR, the temperature selector to the desired temperature position and the blower speed selector to the desired blower speed position. Setting the blower speed selector to a higher blower speed position increases heating efficiency.

Quick heating (using recirculated air)

The base settings are the same as for normal heating except you select RECIRCULATED AIR. If you use this heating method for an extended period of time, the air in the vehicle can become contaminated and the windows may become misty. Therefore, use this method only for quick heating and change to the normal heating method as soon as possible.

Head cooled/Feet warmed heating
Select BI-LEVEL and FRESH AIR, the temperature selector to the desired temperature position, and the blower speed selector to the desired blower speed position. Unless the temperature selector is in the fully cold position or fully hot position, the air that comes out of the center and side outlets will be cooler than the air that comes out of the floor outlets.

Normal cooling
Set the air flow selector to VENTILATION, the temperature selector to the desired temperature position and the blower speed selector to the desired blower speed position, and turn on "A/C" switch. Setting the blower speed selector to a higher blower speed position increases cooling efficiency.

You can switch the air intake selector to either FRESH AIR or RECIRCULATED AIR as you desire. Choosing RECIRCULATED AIR increases cooling efficiency.

Quick cooling (using recirculated air)
The base settings are the same as for normal cooling except you select RECIRCULATED AIR and the highest blower speed.

NOTE:
- *If you select RECIRCULATED AIR for an extended period of time, the air in the vehicle can become contaminated and the windows tend to get misted. Therefore, you should select FRESH AIR whenever possible.*
- *If your vehicle has been left in the sun with the windows closed, it will cool faster if you open the windows briefly while you operate the air conditioner with the air intake selector at FRESH AIR and the blower at high speed.*

Dehumidifying
Set the air flow selector to a desired air flow selector position, the temperature selector to the desired temperature position and the blower speed selector to the desired blower speed position. Also select FRESH AIR and turn on "A/C" switch.

NOTE:
Because the air conditioner dehumidifies the air, turning it on will help keep the windows clear, even when blowing heated air using DEFROST or HEAT & DEFROST functions.

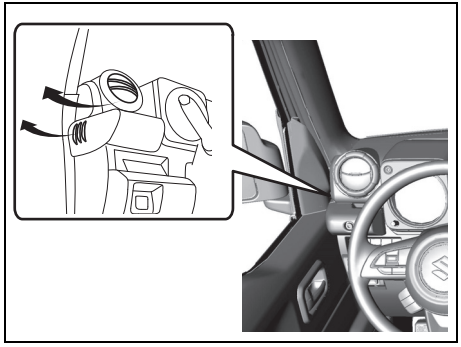

78RB05035

NOTE:
If you need maximum defrosting:
- *select DEFROST and FRESH AIR,*
- *set the blower speed selector to high,*
- *adjust the temperature selector to the hot end,*
- *turn on "A/C" switch, and*
- *adjust the side outlets so the air blows on the side windows.*

Maintenance

If you do not use the air conditioner for a long period, such as during winter, it may not give the best performance when you start using it again. To help maintain optimum performance and durability of your air conditioner, it needs to be run periodically. Operate the air conditioner at least once a month for one minute with the engine idling. This circulates the refrigerant and oil and helps protect the internal components.

If your air conditioner is equipped with air filters, clean or replace them as specified in "Maintenance schedule" in "INSPECTION AND MAINTENANCE" section.

(For models with air conditioner refrigerant R-1234yf)

NOTE:

- *Your vehicle uses the air conditioning refrigerant HFO-1234yf, commonly called R-1234yf. R-1234yf replaced R-134a for automotive applications. Other refrigerants are available, but only R-1234yf should be used in your vehicle.*

NOTICE
Using the wrong refrigerant may damage your air conditioning system. Use R-1234yf only. Do not mix or replace the R-1234yf with other refrigerants.

(For models with air conditioner refrigerant R-134a)

NOTE:

Your vehicle uses the air conditioning refrigerant HFC-134a, commonly called R-134a. R-134a replaced R-12 around 1993 for automotive applications. Other refrigerants are available, including recycled R-12, but only R-134a should be used in your vehicle.

NOTICE
Using the wrong refrigerant may damage your air conditioning system. Use R-134a only. Do not mix or replace the R-134a with other refrigerants.

Automatic heating and air conditioning system (climate control)

Description of controls

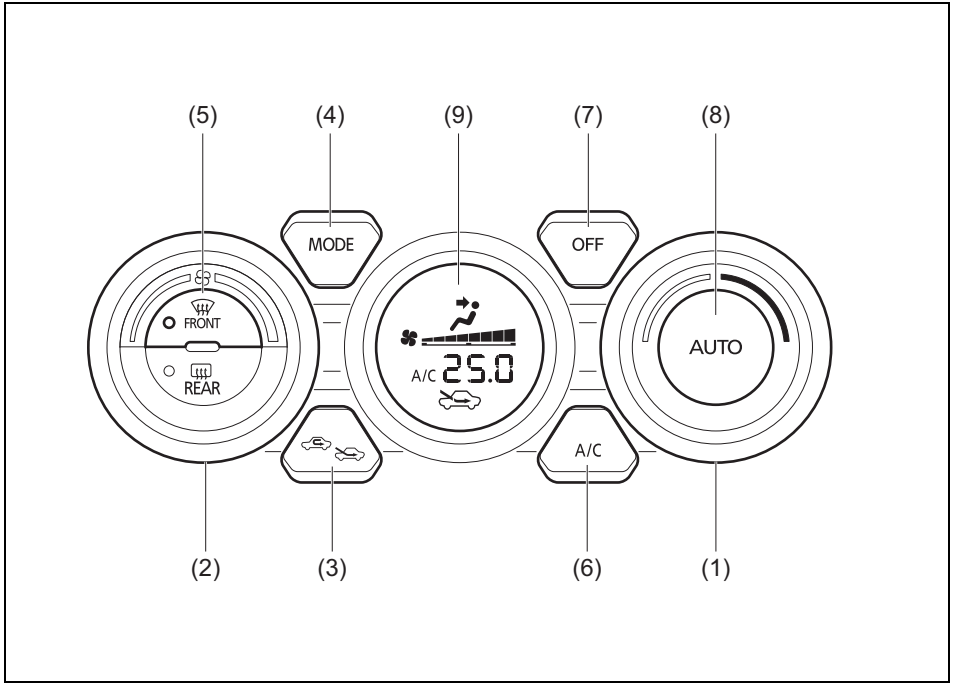

78RB05036

(1) Temperature selector
(2) Blower speed selector
(3) Air intake selector
(4) Air flow selector
(5) Defrost switch
(6) Air conditioning switch
(7) “OFF” switch
(8) “AUTO” switch
(9) Display

Temperature selector (1)

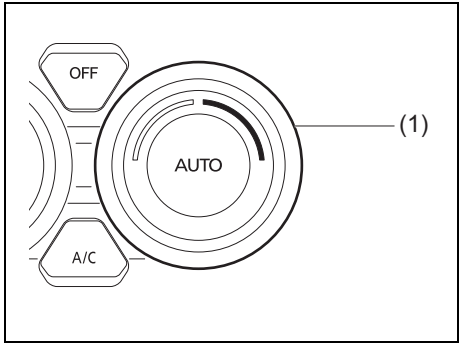

78RB05037

Turn the temperature selector (1) to adjust the temperature.

NOTE:
If you turn the temperature selector (1) until "HI" or "LO" appears on the display, the climate control system will operate at maximum heating or cooling. The temperature of the air from the outlets may change suddenly while "LO" or "HI" is displayed, but this is normal.

NOTE:
When you change the unit of temperature in the information display, the unit of temperature in the air conditioning system will be changed. Refer to "Information display" in the "BEFORE DRIVING" section for details.

Blower speed selector (2)

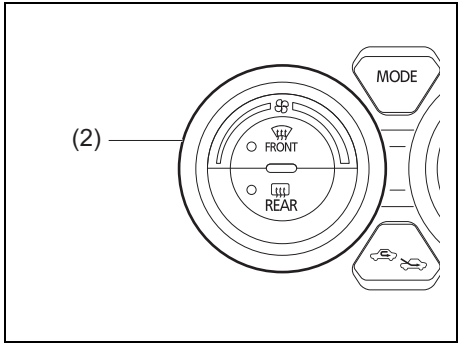

78RB05038

The blower speed selector (2) is used to turn on the blower and to select blower speed.

If "AUTO" switch (8) is pushed, the blower speed will vary automatically as the climate control system maintains the selected temperature.

Air intake selector (3)

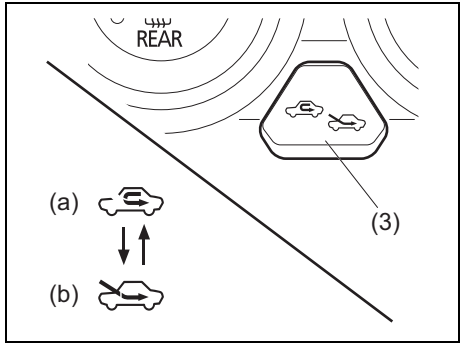

78RB05039

Push the air intake selector (3) to change between the recirculated air and fresh air mode.

If "AUTO" switch (8) is pushed, the air intake will vary automatically as the climate control system maintains the selected temperature.

NOTE:
When the recirculated air mode is selected, the automatic operation system is deactivated even if you push "AUTO" switch (8).

RECIRCULATED AIR (a)
When this mode is selected, inside air is recirculated. This mode is suitable when driving through dusty or polluted air such as a tunnel, or when attempting to quickly cool down or warm up the interior.

FRESH AIR (b)
When this mode is selected, outside air is introduced.

FRESH AIR and RECIRCULATED AIR are selected alternately each time the air intake selector is pushed.

NOTE:
If you select RECIRCULATED AIR for an extended period of time, the air in the vehicle may become contaminated.
Therefore, you should occasionally select FRESH AIR.

Air flow selector (4)

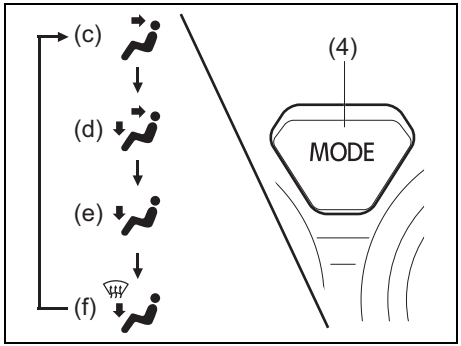

78RB05040

Push the air flow selector (4) to change among the following functions. The indication of the selected mode appears in the display.

If “AUTO” switch (8) is pushed, the air flow will vary automatically as the climate control system maintains the selected temperature.

VENTILATION (c)

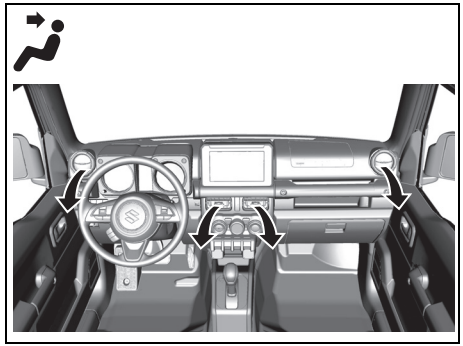

78RB05041

Temperature-controlled air comes out of the center and side outlets.

BI-LEVEL (d)

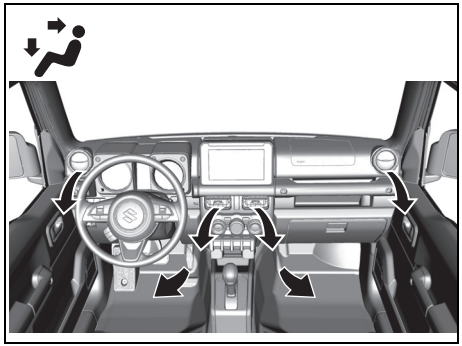

78RB05042

Temperature-controlled air comes out of the floor outlets and cooler air comes out of the center and side outlets. When the temperature selector (1) is in the fully cold position or fully hot position, however, the air from the floor outlets and the air from the center and side outlets will be the same temperature.

HEAT (e)

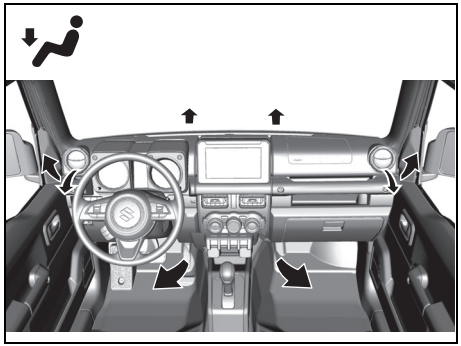

85U050260

Temperature-controlled air comes out of the floor outlets and the side outlets, a small amount of air comes out of the windshield defroster outlets and also comes slightly out of the side defroster outlets.

HEAT & DEFROST (f)

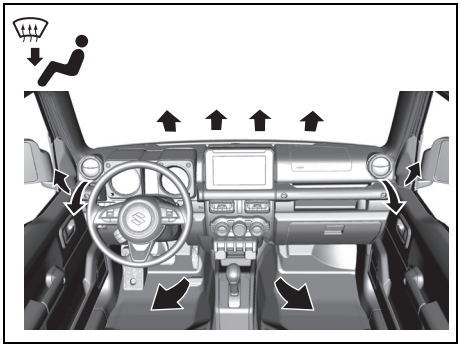

85U050270

Temperature-controlled air comes out of the floor outlets, the windshield defroster outlets, the side defroster outlets and the side outlets.

Defrost switch (5)

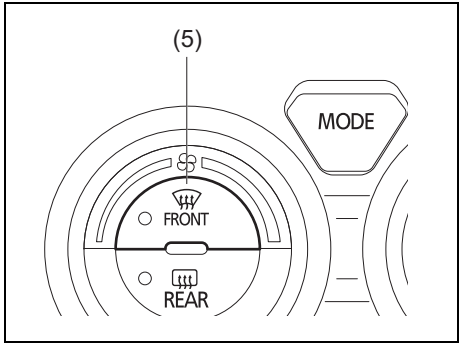

78RB05045

Push the defrost switch (5) to turn on the defroster.

DEFROST

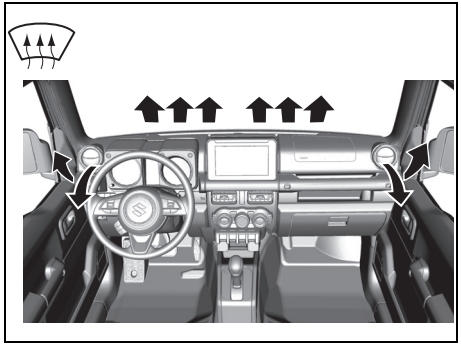

85U050280

Temperature-controlled air comes out of the windshield defroster outlets, the side defroster outlets and the side outlets.

NOTE:
When the defrost switch (5) is pushed to turn on the defroster, the air conditioning system will operate and FRESH AIR mode will be selected automatically. In very cold weather, however, the air conditioning system will not operate.

Air conditioning switch (6)

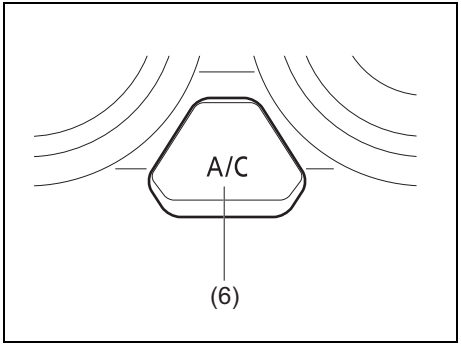

78RB05047

The air conditioning switch (6) is used to turn on and off the air conditioning system only when the blower is on. To turn on the air conditioning system, push in the switch and “A/C” will appear in the display. To turn off the air conditioning system, push in the switch again and “A/C” will go off.

System operating instructions

Automatic operation

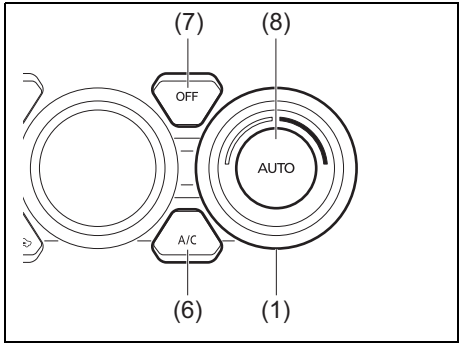

78RB05048

You can let the climate control system work automatically. To set the system for fully-automatic operation, follow the procedure below.

1) Start the engine.
2) Push “AUTO” switch (8).
3) Set the desired temperature by turning the temperature selector (1).
4) Push air conditioning switch(6).

The blower speed, air intake and air flow are controlled automatically to maintain the set temperature. However, the air flow is not changed to DEFROST position automatically.

NOTE:
When the recirculated air mode is selected, the automatic operation system is deactivated even if you push “AUTO” switch (8).

You can use the air conditioning switch (6) to manually turn the air conditioner on or off according to your preference. When you turn the air conditioning switch off, the climate control system cannot lower the inside temperature below outside temperature.

To turn the climate control system off, push “OFF” switch (7).

NOTE:
If “AUTO” in the display blinks, there is a problem in the heating system and/or air conditioning system. You should have the system inspected by an authorized SUZUKI dealer or a qualified workshop.

NOTE:
- *To find the temperature at which you are most comfortable, start with the 22°C (72°F) or 25°C (77°F) setting. (the temperature vary depending on vehicle specifications.).*
- *If you turn the temperature selector (1) until “HI” or “LO” appears on the display, the climate control system will operate at maximum heating or cooling and the blower will run at full speed.*
- *To avoid blowing cold air in cold weather or hot air in hot weather, the system will delay turning on the blower until warmed or cooled air is available.*
- *If your vehicle has been left in the sun with the windows closed, it will cool faster if you open the windows briefly.*
- *Even under the automatic operation, you can set individual selectors to the manual mode. The manually selected functions are maintained, and the other functions remain under automatic operation.*
- *If the windshield and/or the front door windows are fogged, push the defrost switch (5) to turn on the defroster, or push the air flow selector (4) to change the air flow to HEAT & DEFROST position to defog the windows.*
- *To return the blower speed selector (2), air intake selector (3), and air flow selector (4) to automatic operation, push “AUTO” switch (8).*

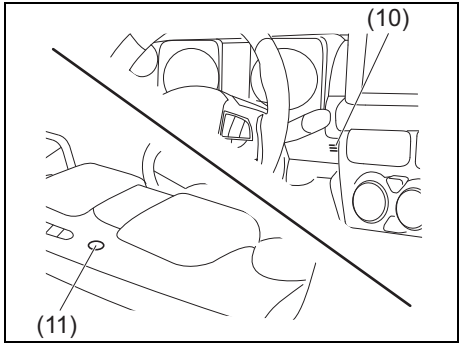

78RB05049

Be careful not to cover the interior temperature sensor (10) located between the steering wheel and the climate control panel, or the solar sensor (11) located at the top of the passenger's side dashboard. These sensors are used by the automatic system to regulate temperature.

Manual operation

You can manually control the climate control system. Set the selectors to the desired positions.

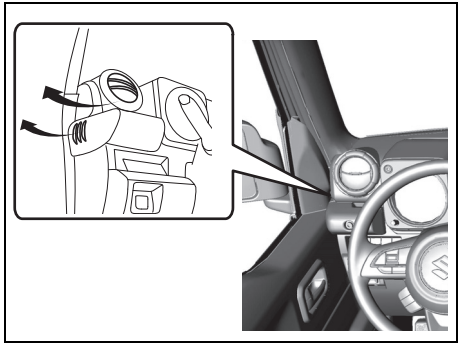

78RB05050

NOTE:
If you need maximum defrosting:

- *push the defrost switch (5) to turn on the defroster (the air conditioning system will operate and FRESH AIR mode will be selected automatically),*
- *set the blower speed selector to high,*
- *adjust the temperature selector to "HI" indication on the display, and*
- *adjust the side outlets so the air blows on the side windows.*

Models with idling stop system (if equipped)

- If the cooling and heating performance is insufficient when the engine is stopped automatically, push the idling stop system OFF switch to deactivate the idling stop system. (The engine is restarted automatically, and the cooling and heating performance is restored.)
- If the windshield and/or front door windows are fogged, push the defrost switch. (When the defrost switch is pushed, the engine is restarted automatically and the defroster is turned on.)

Maintenance

If you do not use the air conditioner for a long period, such as during winter, it may not give the best performance when you start using it again. To help maintain optimum performance and durability of your air conditioner, it needs to be run periodically. Operate the air conditioner at least once a month for one minute with the engine idling. This circulates the refrigerant and oil and helps protect the internal components.

If your air conditioner is equipped with air filters, clean or replace them as specified in “Maintenance schedule” in “INSPECTION AND MAINTENANCE” section. Have this job done by an authorized SUZUKI dealer or a qualified workshop as the lower glove box must be lowered for this job.

(For models with air conditioner refrigerant R-1234yf)

NOTE:

- *Your vehicle uses the air conditioning refrigerant HFO-1234yf, commonly called R-1234yf. R-1234yf replaced R-134a for automotive applications. Other refrigerants are available, but only R-1234yf should be used in your vehicle.*

(For the country of Singapore)

- *For repair and parts replacement, have your vehicle repaired or replaced parts by an authorized SUZUKI dealer that has the mechanic qualified with SAE J2845 for air conditioner of R-1234yf.*

NOTICE

Using the wrong refrigerant may damage your air conditioning system. Use R-1234yf only. Do not mix or replace the R-1234yf with other refrigerants.

(For models with air conditioner refrigerant R-134a)

NOTE:
Your vehicle uses the air conditioning refrigerant HFC-134a, commonly called R-134a. R-134a replaced R-12 around 1993 for automotive applications. Other refrigerants are available, including recycled R-12, but only R-134a should be used in your vehicle.

NOTICE

Using the wrong refrigerant may damage your air conditioning system. Use R-134a only. Do not mix or replace the R-134a with other refrigerants.

Radio antenna

Type A

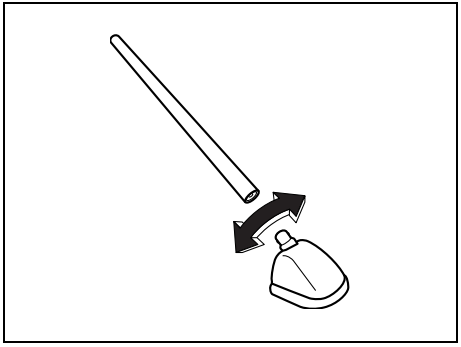

63J055

Type B

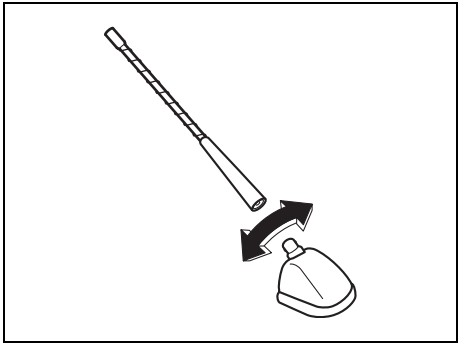

61MM0A113

The radio antenna on the roof is removable. To remove the antenna, turn it counterclockwise. To reinstall the antenna, turn it clockwise firmly by hand.

NOTE:
Adjust the antenna angle to maximum for optimum radio reception.

NOTICE

To avoid damage to the radio antenna:
- **Remove the antenna when using an automatic car wash.**
- **Remove the antenna when the antenna hits anything such as a low ceiling in a parking garage or putting a car cover over your vehicle.**

Installation of radio frequency transmitters

NOTE:
When you intend to use Radio Frequency (RF) transmitting equipment in your vehicle, refer to "Installation of Radio Frequency (RF) Transmitting Equipment" in the end of this book.

NOTICE

Improper installation of mobile communication equipment such as cellular telephones, CB (Citizen's Band) radios or any other wireless transmitters may cause electronic interference with your vehicle's ignition system or any other electrical systems resulting in vehicle performance problems. Consult an authorized SUZUKI dealer or a qualified service technician for advice.

Remote audio controls (if equipped)

Controlling basic functions of the audio system is available using the switches on the steering wheel.
The remote audio switches are available when the ignition switch is in "ACC" or "ON" position or engine switch is in ACC or ON mode.
- For operation of an audio system, refer to the supplementary manual, provided along with it.
- The operating procedure may be different depending on an audio system.

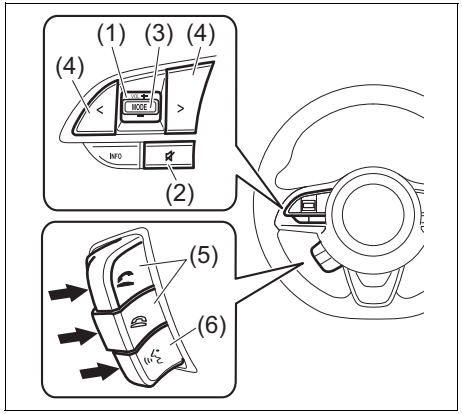

85U050290

(1) Volume switch
(2) Mute switch
(3) “MODE” switch
(4) Select switch
(5) Hands-free switch
(6) Voice recognition switch (if equipped)

NOTE:
To use the button (5) or (6), press each button in the arrow direction as shown in the illustration.

Volume Switch (1)

You can adjust volume with this switch.
- To increase the volume, press “+” side.
- To decrease the volume, press “–” side.
- The volume will continue to increase or decrease until this switch is released.

Mute Switch (2)

To mute this sound, press the switch (2).

“MODE” Switch (3)

Every time you press this switch, the audio modes such as radio, etc. will be switched in order.
Depending on an audio systems, you can turn on the system by pressing this switch, even when the equipment itself is turned off.

Select Switch (4)

Every time you press this switch, you can select broadcast station or music according to your preference, along with the currently selected mode.

Hands-free Switch (5)

You can use this switch for the equipment which has the hands-free function. To use the function, you need to set up for the equipment. Refer to the supplementary manual for details.

Voice Recognition Switch (6)* (if equipped)

You can use this switch for the equipment which has the voice recognition function. To use the function, you need to set up for the equipment. Refer to the supplementary manual for details.

*: When using Apple CarPlay® or Android Auto™ on infotainment system

Apple CarPlay® may not be available in your country or region.
For details about Apple CarPlay, visit the following site:
http://www.apple.com/ios/carplay

Android Auto™ may not be available in your country or region.
For details about Android Auto, please refer to the Google support site:
http://support.google.com/androidauto

MEMO

INSPECTION AND MAINTENANCE

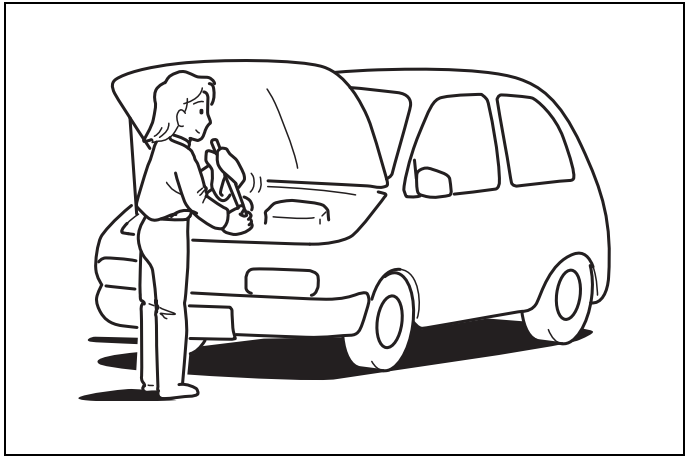

60G410

Maintenance schedule 6-2
Periodic maintenance schedule
(except for vehicle with oil life monitoring system) 6-3
Maintenance recommended under severe driving conditions
(except for vehicle with oil life monitoring system) 6-8
Drive belt 6-13
Engine oil and filter 6-13
Engine coolant 6-17
Air cleaner 6-19
Spark plugs 6-19
Automatic Transmission (AT) fluid 6-21
Gear oil 6-22
Brakes 6-24
Steering wheel 6-27
Tyres 6-27
Battery 6-32
Fuses 6-35
Headlight aiming 6-38
Headlight washer fluid 6-39
Bulb replacement 6-39
Wiper blades 6-48
Windshield washer fluid 6-52
Air conditioning system 6-52
Preparation before winter Season 6-54



60B128S

⚠ WARNING

Take extreme care when working on your vehicle to prevent accidental injury. Carefully observe the following precautions:

- **To prevent damage or unintended activation of the airbag system or seat belt pretensioner system, check that the lead-acid battery is disconnected and the ignition switch has been in "LOCK" position or the ignition mode has been in LOCK (OFF) position for at least 90 seconds before performing any electrical service work on your SUZUKI vehicle. Do not touch airbag system components, seat belt pretensioner system components or wires.**
  The wires are wrapped with yellow tape or yellow tubing, and the couplers are yellow for easy identification.
- **Do not leave the engine running in garages or other confined areas.**

(Continued)

⚠ WARNING

(Continued)

- **When the engine is running, keep hands, clothing, tools, and other objects away from the fan and drive belt. Even though the fan may not be moving, it can automatically turn on without warning.**
- **When it is necessary to perform service work with the engine running, check that the parking brake is set fully and the transmission is in Neutral (for manual transmission vehicles) or Park (for automatic transmission vehicles).**
- **Do not touch ignition wires or other ignition system parts when starting the engine or when the engine is running, or you could receive an electric shock.**
- **Be careful not to touch a hot engine, exhaust manifold and pipes, muffler, radiator and water hoses.**
- **Do not allow smoking, sparks, or flames around fuel or the battery. Flammable fumes are present.**
- **Do not get under your vehicle if it is supported only with the portable jack provided in your vehicle.**
- **Be careful not to cause accidental short circuits between the positive and negative battery terminals.**

(Continued)

⚠ WARNING

(Continued)

- **Keep used oil, coolant, and other fluids away from children and pets. Dispose of used fluids properly; never pour them on the ground, into sewers, etc.**

Maintenance schedule

The following table shows the timing when you should perform regular maintenance on your vehicle. This table shows in miles, kilometers and months when you should perform inspections, adjustments, lubrication and other services. These intervals should be shortened if driving is usually done under severe conditions (refer to “Maintenance recommended under severe driving conditions”).

⚠ WARNING

SUZUKI recommends that maintenance on items marked with an asterisk (*) be performed by an authorized SUZUKI dealer or a qualified workshop. If you are qualified, you may perform maintenance on the unmarked items by referring to the instructions in this section. If you are not sure whether you can successfully complete any of the unmarked maintenance jobs, ask an authorized SUZUKI dealer or a qualified workshop to do the maintenance for you.

NOTICE

Whenever it becomes necessary to replace parts on your vehicle, it is recommended that you use genuine SUZUKI replacement parts or their equivalent.

Periodic maintenance schedule (except for vehicle with oil life monitoring system)

"R" : Replace or Change
"I" : Inspect, clean, adjust, lubricate or replace as necessary

NOTE:
This table shows the service schedule up to 150000 km (94000 miles). Beyond 150000 km, perform the same services at the same intervals shown in the chart.

*Interval: This interval should be judged by odometer reading or months, whichever comes first.	km (x1,000)	1	10	20	30	40	50	60	70	80	90	100	110	120	130	140	150
	months	1	6	12	18	24	30	36	42	48	54	60	66	72	78	84	90
ENGINE																	
*1-1. Belt		I	I	I	I	I	I	I	I	I	I	R	I	I	I	I	I
Adjustment, *Replacement		I	I	I	I	I	I	I	I	I	I	R	I	I	I	I	I
*1-2. Valve clearance		–	–	–	I	–	–	I	–	–	I	–	–	I	–	–	I
1-3. Engine oil and engine oil filter		I	R	R	R	R	R	R	R	R	R	R	R	R	R	R	R
1-4. Engine coolant	SUZUKI LLC: Super (Blue) (#2)	–	–	–	–	–	–	–	–	–	–	R	–	–	–	–	–
	SUZUKI LLC: Standard (Green)	–	–	–	–	–	–	R	–	–	–	–	–	R	–	–	–
*1-5. Exhaust system (except catalyst)		–	–	–	I	–	–	I	–	–	I	–	–	I	–	–	I
IGNITION																	
2-1. Nickel plug Use unleaded fuel		–	–	–	–	–	–	R	–	–	–	–	–	R	–	–	–
Iridium plug Use unleaded fuel		–	–	–	–	–	–	–	–	–	–	R	–	–	–	–	–

*Interval: This interval should be judged by odometer reading or months, whichever comes first.	km (x1,000)	1	10	20	30	40	50	60	70	80	90	100	110	120	130	140	150
	months	1	6	12	18	24	30	36	42	48	54	60	66	72	78	84	90
FUEL																	
3-1. Air cleaner filter element		I	I	I	I	I	I	R	I	I	I	I	I	R	I	I	I
*3-2. Fuel lines		–	–	–	I	–	–	I	–	–	I	–	–	I	–	–	I
*3-3. Fuel filter		–	–	–	–	–	–	–	–	–	–	R	–	–	–	–	–
*3-4. Fuel tank		–	–	–	–	I	–	–	–	I	–	–	I	–	–	I	–
EMISSION CONTROL SYSTEM																	
*4-1. PCV Valve		–	–	–	–	–	–	–	–	–	I	–	–	–	–	–	–
*4-2. Fuel evaporative emission control system		–	–	–	–	–	–	–	–	–	I	–	–	–	–	–	–
BRAKE																	
*5-1. Brake discs and pads (front, rear)		I	I	I	I	I	I	I	I	I	I	I	I	I	I	I	–
Brake drums and shoes (rear)		I	I	I	I	I	I	I	I	I	I	I	I	I	I	I	–
*5-2. Brake hoses and pipes		–	–	–	I	–	–	I	–	–	I	–	–	I	–	–	I
5-3. Brake fluid check, *Replacement		–	I	I	I	R	I	I	I	R	I	I	I	R	I	I	I
5-4. Parking brake lever and cable check, *Adjustment (20,000 km for first time only)		–	–	I	–	–	–	–	–	–	–	–	–	–	–	–	–

*Interval: This interval should be judged by odometer reading or months, whichever comes first.	km (x1,000)	1	10	20	30	40	50	60	70	80	90	100	110	120	130	140	150
	months	1	6	12	18	24	30	36	42	48	54	60	66	72	78	84	90
CHASSIS AND BODY																	
*6-1. Clutch fluid (#1)		–	–	–	–	R	–	–	–	R	–	–	–	R	–	–	–
*6-2. Clutch (clutch fluid level)		I	I	I	I	I	I	I	I	I	I	I	I	I	I	I	I
6-3. Tyres, Wheels		I	I	I	I	I	I	I	I	I	I	I	I	I	I	I	I
*6-4. Wheel bearings		–	–	–	I	–	–	I	–	–	I	–	–	I	–	–	I
*6-5. Propeller shafts		–	–	–	–	I	–	–	–	I	–	–	–	I	–	–	–
*6-6. Suspension system		–	–	I	–	I	–	I	–	I	–	I	–	I	–	I	–
*6-7. Steering system		–	–	I	–	I	–	I	–	I	–	I	–	I	–	I	–
*6-8. Manual transmission oil (Genuine Suzuki Gear Oil 75W-90)		–	–	–	–	–	–	R	–	–	–	–	–	R	–	–	–
*6-9. Automatic transmission Fluid level		–	–	–	I	–	–	I	–	–	I	–	–	I	–	–	I
* Fluid change		–	–	–	–	–	–	R	–	–	–	–	–	R	–	–	–
* Fluid hose		–	–	–	I	–	–	I	–	–	I	–	–	I	–	–	I
*6-10. Transfer oil		–	–	–	–	–	–	R	–	–	–	–	–	R	–	–	–
*6-11. Differential oil		–	–	R	–	–	–	–	–	–	–	R	–	–	–	–	–
6-12. All latches, hinges and locks		–	–	I	–	I	–	I	–	I	–	I	–	I	–	I	–
*6-13. Air conditioner filter element		I	I	I	I	R	I	I	I	R	I	I	I	R	I	I	I

#1: For further details, see “Engine oil and filter” in this section.
#2: Perform the engine coolant level check under the daily inspection in the “OPERATING YOUR VEHICLE” section.
If you use the engine coolant other than “SUZUKI LLC: Super (Blue)” for replacement, follow the schedule of “SUZUKI LLC: Standard (Green)”. (Replace every 60000 km or 36 months.)

⚠ WARNING

The shock absorbers are filled with high pressure gas. Never attempt to disassemble them or throw them into a fire. Avoid storing them near a heater or heating device. When scrapping the absorber, the gas must be released from the absorber safely. Ask your dealer for assistance.

Maintenance recommended under severe driving conditions (except for vehicle with oil life monitoring system)

Follow this schedule if your vehicle is mainly operated under one or more of the following conditions:
- When most trips are less than 6 km (4 miles).
- When most trips are less than 16 km (10 miles) and outside temperature remains below freezing.
- Idling and/or low-speed operation in stop-and-go traffic.
- Operating in extremely cold weather and/or on salted roads.
- Operating in rough and/or muddy areas.
- Operating in dusty areas.
- Repeated high speed drive or high engine revolutions.
- Towing a trailer, if admitted.

Schedule should also be followed if the vehicle is used for delivery service, police, taxi or other commercial applications.

*Interval: This interval should be judged by odometer reading or months, whichever comes first.	km (x1,000)	1	10	20	30	40	50	60	70	80	90	100	110	120	130	140	150
	months	1	6	12	18	24	30	36	42	48	54	60	66	72	78	84	90
ENGINE																	
*1-1. Belt		I	I	I	I	I	I	R	I	I	I	I	I	R	I	I	I
Belt tension check Adjustment, *Replacement		I	I	I	I	I	I	R	I	I	I	I	I	R	I	I	I
*1-2. Valve clearance		–	–	–	I	–	–	I	–	–	I	–	–	I	–	–	I
1-3. Engine oil and engine oil filter		I	R	R	R	R	R	R	R	R	R	R	R	R	R	R	R
1-4. Engine coolant	SUZUKI LLC: Super (Blue) (#2)	–	–	–	–	–	–	–	–	R	–	–	–	–	–	–	–
	SUZUKI LLC: Standard (Green)	–	–	–	–	R	–	–	–	R	–	–	–	R	–	–	–
*1-5. Exhaust system (except catalyst)		–	–	–	I	–	–	I	–	–	I	–	–	I	–	–	I
IGNITION																	
2-1. Nickel plug Use unleaded fuel		–	–	–	–	–	–	R	–	–	–	–	–	R	–	–	–
Iridium plug Use unleaded fuel		–	–	–	–	–	–	–	–	–	–	R	–	–	–	–	–
If leaded fuel is used, refer to Maintenance recommended under severe driving conditions.																	

*Interval: This interval should be judged by odometer reading or months, whichever comes first.	km (x1,000)	1	10	20	30	40	50	60	70	80	90	100	110	120	130	140	150
	months	1	6	12	18	24	30	36	42	48	54	60	66	72	78	84	90
FUEL																	
3-1. Air cleaner filter element		I	I	I	I	R	I	I	I	R	I	I	I	R	I	I	I
*3-2. Fuel lines		–	–	–	I	–	–	I	–	–	I	–	–	I	–	–	I
*3-3. Fuel filter		–	–	–	–	–	–	–	–	–	–	R	–	–	–	–	–
*3-4. Fuel tank		–	–	–	–	I	–	–	–	I	–	–	I	–	–	I	–
EMISSION CONTROL SYSTEM																	
*4-1. PCV Valve		–	–	–	–	–	–	–	–	–	I	–	–	–	–	–	–
*4-2. Fuel evaporative emission control system		–	–	–	–	–	–	–	–	–	I	–	–	–	–	–	–
BRAKE																	
*5-1. Brake discs and pads (front, rear)		I	I	I	I	I	I	I	I	I	I	I	I	I	I	I	–
Brake drums and shoes (rear)		I	I	I	I	I	I	I	I	I	I	I	I	I	I	I	–
*5-2. Brake hoses and pipes		–	–	–	I	–	–	I	–	–	I	–	–	I	–	–	I
5-3. Brake fluid check, *Replacement		–	I	I	I	R	I	I	I	R	I	I	I	R	I	I	I
5-4. Parking brake lever and cable check, *Adjustment (20,000 km for first time only)		–	–	I	–	–	–	–	–	–	–	–	–	–	–	–	–

*Interval: This interval should be judged by odometer reading or months, whichever comes first.	km (x1,000)	1	10	20	30	40	50	60	70	80	90	100	110	120	130	140	150
	months	1	6	12	18	24	30	36	42	48	54	60	66	72	78	84	90
CHASSIS AND BODY																	
*6-1. Clutch fluid (#1)		–	–	–	–	R	–	–	–	R	–	–	–	R	–	–	–
*6-2. Clutch (clutch fluid level)		I	I	I	I	I	I	I	I	I	I	I	I	I	I	I	I
6-3. Tyres, Wheels		I	I	I	I	I	I	I	I	I	I	I	I	I	I	I	I
*6-4. Wheel bearings		–	–	–	I	–	–	I	–	–	I	–	–	I	–	–	I
*6-5. Propeller shafts		–	–	–	–	I	–	–	–	I	–	–	–	I	–	–	–
*6-6. Suspension system		–	–	I	–	I	–	I	–	I	–	I	–	I	–	I	–
*6-7. Steering system		–	–	I	–	I	–	I	–	I	–	I	–	I	–	I	–
*6-8. Manual transmission oil (Genuine Suzuki Gear Oil 75W-90)		–	–	–	–	–	–	R	–	–	–	–	–	R	–	–	–
*6-9. Automatic transmission	Fluid level	–	–	–	I	–	–	I	–	–	I	–	–	I	–	–	I
	* Fluid change	–	–	–	–	–	–	R	–	–	–	–	–	R	–	–	–
	* Fluid hose	–	–	–	I	–	–	I	–	–	I	–	–	I	–	–	I
*6-10. Transfer oil		–	–	–	–	–	–	R	–	–	–	–	–	R	–	–	–
*6-11. Differential oil		–	–	R	–	–	–	R	–	–	–	R	–	–	–	R	–
6-12. All latches, hinges and locks		–	–	I	–	I	–	I	–	I	–	I	–	I	–	I	–
*6-13. Air conditioner filter element		I	I	I	I	R	I	I	I	R	I	I	I	R	I	I	I

#1: For further details, see “Engine oil and filter” in this section.
#2: Perform the engine coolant level check under the daily inspection in the “OPERATING YOUR VEHICLE” section.
If you use the engine coolant other than “SUZUKI LLC: Super (Blue)” for replacement, follow the schedule of “SUZUKI LLC: Standard (Green)”. (Replace every 60000 km or 36 months.)
*1 Inspect more frequently if the vehicle is used under dusty conditions.

⚠ WARNING

The shock absorbers are filled with high pressure gas. Never attempt to disassemble them or throw them into a fire. Avoid storing them near a heater or heating device. When scrapping the absorber, the gas must be released from the absorber safely. Ask your dealer for assistance.

Drive belt

⚠ WARNING

When the engine is running, keep hands, hair, clothing, tools, etc. away from the moving fan and drive belts.

Check that the drive belt tension is correct while the engine is stopped. If the belt is too loose, insufficient battery charging, engine overheating, poor air conditioning, or excessive belt wear can result. When you push the belt with your thumb midpoint between the pulleys, there should be a deflection according to the following chart.

The belts should also be examined to ensure that they are not damaged.

If you need to replace or adjust the belt have it done by an authorized SUZUKI dealer or a qualified workshop.

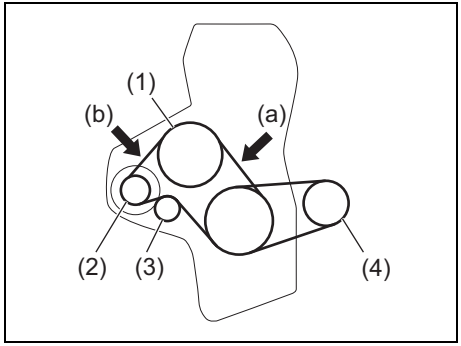

78RB07001

(1) Water pump (2) Generator
(3) Idler pulley
(4) Air conditioner compressor

Drive belt deflection (100 N (10 kg, 22 lbs) press)

(a) New:
4.8 - 5.9 mm (0.19 - 0.23 in.)
Readjustment:
7.2 - 8.2 mm (0.28 - 0.32 in.)

(b) New:
3.5 - 4.4 mm (0.14 - 0.17 in.)
Readjustment:
5.4 - 6.2 mm (0.21 - 0.24 in.)

Engine oil and filter

Specified oil

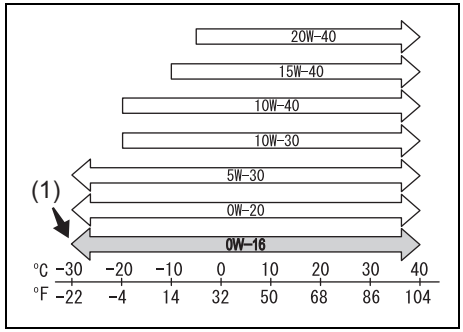

69RH173

(1) Preferred

Be sure that the engine oil you use comes under the quality classification as listed below.

- API SL, SM, SN, SP
- ILSAC GF-6
- ACEA A3/B4, A5/B5

Select the appropriate oil viscosity according to the above chart.

SAE 0W-16 (1) is the best choice for good fuel economy and good starting in cold weather.

NOTE:
- *We recommend that you use SUZUKI genuine oil. To purchase it, see an authorized SUZUKI dealer or a qualified workshop.*
- *(For vehicle with oil life monitoring system)*
  The replacement timing varies with the type of engine oil that you choose.
  Refer to "Maintenance schedule" in this section for corresponding maintenance schedule.

Oil level check

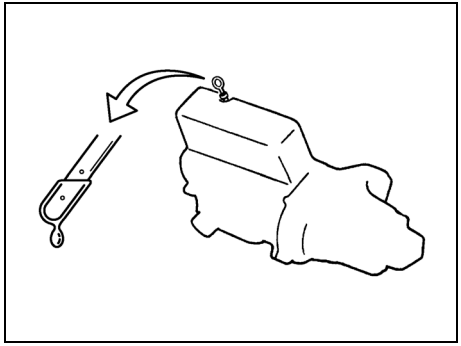

80G064

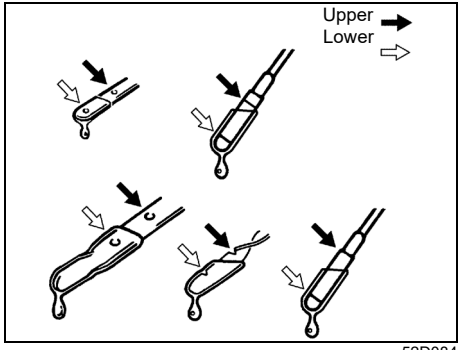

52D084

It is important to keep the engine oil at the correct level for proper lubrication of your vehicle's engine. Check the oil level with the vehicle on a level surface. The oil level indication may be inaccurate if the vehicle is on a slope. The oil level should be checked either before starting the engine or at least 5 minutes after stopping the engine.

Pull out the oil dipstick, wipe the oil off with a clean cloth, insert the dipstick all the way into the engine, and then remove it again. The oil on the stick should be between the upper and lower limits shown on the stick. If the oil level indication is near the lower limit, add enough oil to raise the level to the upper limit.

NOTICE

Failure to check the oil level regularly could lead to serious engine trouble due to insufficient oil.

Refilling

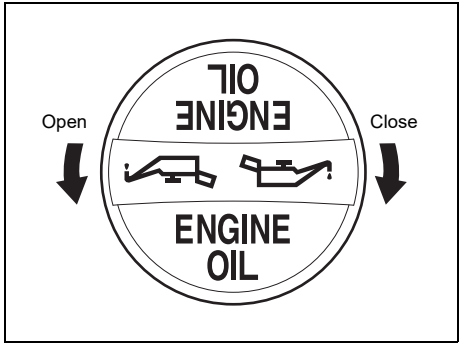

52RM60020

Remove the oil filler cap and pour oil slowly through the filler hole to bring the oil level to the upper limit on the dipstick. Be careful not to overfill the oil. Too much oil is almost as bad as too little oil. After refilling, start the engine and allow it to idle for about a minute. Stop the engine, wait about 5 minutes and check the oil level again.

Changing engine oil and filter

Drain the engine oil while the engine is still warm.

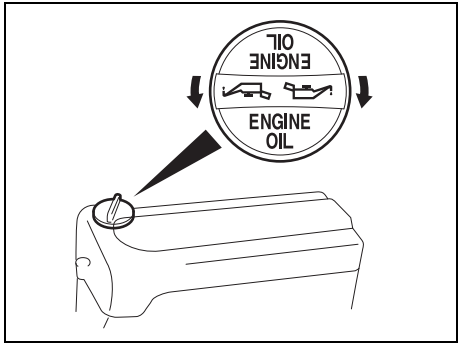

78RB07003

1) Remove the oil filler cap.
2) Place a drain pan under the drain plug.
3) Using a wrench, remove the drain plug and drain the engine oil.

⚠ CAUTION

The engine oil temperature may be high enough to burn your fingers when the drain plug is loosened. Wait until the drain plug is cool enough to touch with your bare hands.

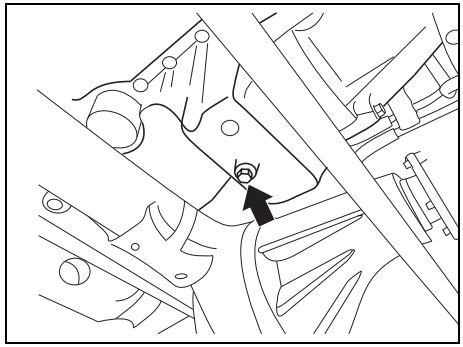

78RB07004

Tightening torque for drain plug: 35 Nm (3.6 kg-m, 25.8 lb-ft)

⚠ WARNING

Engine oil can be hazardous. Children and pets may be harmed by swallowing new or used oil. Keep new and used oil and used oil filters away from children and pets.
Repeated, prolonged contact with used engine oil may cause skin cancer.
Brief contact with used oil may irritate skin.

(Continued)

⚠ WARNING

(Continued)
To minimize your exposure to used oil, wear a long-sleeve shirt and moisture-proof gloves (such as dish-washing gloves) when changing oil. If oil contacts your skin, wash thoroughly with soap and water.
Launder any clothing or rags if it is with oil.
Recycle or properly dispose of used oil and oil filters.

4) Reinstall the drain plug with new gasket. Tighten the plug with a wrench to the specified torque.

NOTE:
- *Whenever the engine oil is changed, the oil life monitoring must be reset to monitor the next oil change timing properly. To reset the light, consult an authorized SUZUKI dealer or a qualified workshop. If you reset it by yourself, refer to "Setting mode" in "BEFORE DRIVING" section.*
- *For more information of the oil change reminder light and oil life monitoring, refer to "Oil change reminder light (if equipped)" or "Information display" in "BEFORE DRIVING" section.*
- *Ask an authorized SUZUKI dealer or a qualified workshop for changing engine oil and filter if you have difficulties.*

Oil filter replacement

1) Using an oil filter wrench, turn the oil filter counterclockwise and remove it.
2) Using a clean rag, wipe off the mounting surface on the engine where the new filter will be seated.
3) Smear a small amount of engine oil around the rubber gasket of the new oil filter.
4) Screw the new filter by hand until the filter gasket contacts the mounting surface.

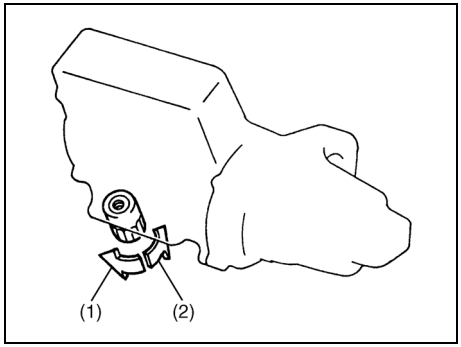

54G092

(1) Loosen
(2) Tighten

Tightening (viewed from filter top)

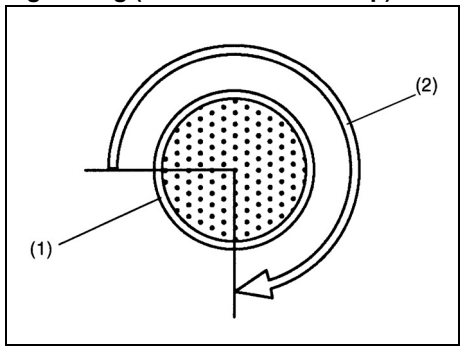

54G093

(1) Oil filter
(2) 3/4 turn

NOTICE

To tighten the oil filter properly, it is important to accurately identify the position at which the filter gasket first contacts the mounting surface.

5) Tighten the filter as specified below from the point of contact with the mounting surface (or to the specified torque) using an oil filter wrench.

Tightening torque for oil filter:
3/4 turn or
14 Nm (1.4 kg-m, 10.3 lb-ft)

NOTICE

To prevent oil leakage, check that the oil filter is tight, but do not overtighten it.

Refill with oil and oil leakage check

1) Pour oil through the filler hole and install the filler cap.
   For the approximate capacity of the oil, refer to "Recommended fuel / lubricants and capacities (approx.)" in "SPECIFICATIONS" section.
2) Start the engine and carefully check the oil filter and the drain plug for leakage. Run the engine at various speeds for at least 5 minutes.
3) Stop the engine and wait about 5 minutes. Check the oil level again and add oil if necessary. Check for leakage again.

NOTICE

- **When replacing the oil filter, it is recommended that you use a genuine SUZUKI replacement filter. If you use an aftermarket filter, check that it is of equivalent quality and follow the manufacturer's instructions.**
- **Oil leakage from the periphery of the oil filter or drain plug indicate incorrect installation or gasket damage. If you find any leakage or are not sure that the filter has been properly tightened, have the vehicle inspected by an authorized SUZUKI dealer or a qualified workshop.**

Engine coolant

Selection of coolant

NOTICE

SUZUKI LLC: Super (Blue) coolant; This coolant is already diluted to the proper percentage. Do not dilute with distilled water additionally. Doing so may result in the possibility of freezing and/or overheating coolant.

To maintain optimum performance and durability of your engine, use SUZUKI genuine coolant or equivalent.

NOTE:
If you use the engine coolant other than the SUZUKI LLC: Super (Blue) for replacement, follow the schedule of SUZUKI LLC: Standard (Green). To see the detail of the maintenance schedule, refer to "Periodic maintenance schedule" in this section.

This type of coolant is the best for cooling system for the following reasons:
- The coolant helps maintain proper engine temperature.
- It gives proper protection against freezing and boiling.
- It gives proper protection against corrosion and rust.

Failure to use the proper coolant can damage your cooling system. An authorized SUZUKI dealer or a qualified workshop can help you select the proper coolant.

NOTICE

To avoid damaging your cooling system:
- **Always use a high quality ethylene glycol base non-silicate type coolant diluted with distilled water at the correct mixture concentration.**
- **Check that the proper mix is 50/50 coolant to distilled water and in no case higher than 70/30. Concentrations greater than 70/30 coolant to distilled water will cause overheating conditions.**
- **Do not use straight coolant nor plain water (except "SUZUKI LLC: Super (Blue)").**
- **Do not add extra inhibitors or additives. They may not be compatible with your cooling system.**
- **Do not mix different types of base coolants. Doing so may result in accelerated seal wear and/or the possibility of severe overheating and extensive engine/automatic transmission damage.**

NOTE:
SUZUKI highly recommends the use of ECSTAR brand coolant. ECSTAR has been specially formulated for your SUZUKI product and contributes to the desired vehicle performance and ideal driving experience.

Coolant level check

Check the coolant level at the reservoir tank, not at the radiator. With the engine cool, the coolant level should be between "FULL" and "LOW" marks.

Adding coolant

⚠ WARNING

Swallowing engine coolant can cause severe injury or death. Inhaling coolant mist or vapors or getting coolant in your eyes could result in severe injury.
- **Do not drink antifreeze or coolant solution. If swallowed, do not induce vomiting. Immediately contact a poison control center or a physician.**
- **Avoid inhaling coolant mist or hot vapors. If inhaled, remove to a fresh air area.**

(Continued)

⚠ WARNING

(Continued)
- **If coolant gets in the eyes, flush with water and seek medical attention.**
- **Wash thoroughly after handling coolant.**
- **Keep engine coolant out of the reach of children and pets.**

NOTICE

SUZUKI LLC: Super (Blue) coolant;
This coolant is already diluted to the proper percentage. Do not dilute with distilled water additionally. Doing so may result in the possibility of freezing and/or overheating coolant.

NOTICE

SUZUKI LLC: Standard (Green) coolant;
- **The mixture you use should contain 50% concentration of antifreeze.**
- **If the lowest ambient temperature in your area is expected to be –35°C (–31°F) or below, use higher concentrations up to 60% following the instructions on the antifreeze container.**

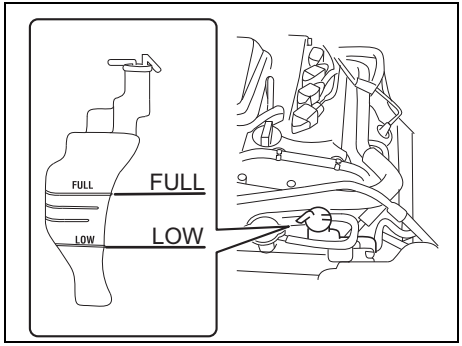

78RB07005

If the coolant level is below “LOW” mark, coolant should be added. While the engine is cool, remove the reservoir tank cap and add coolant until the reservoir tank level reaches “FULL” mark. Never fill the reservoir tank above “FULL” mark.

NOTICE
When putting the cap on the reservoir tank, line up the mark on the cap and the mark on the tank. Failure to follow this can result in coolant leakage.

Coolant replacement

Since special procedures are required, ask an authorized SUZUKI dealer or a qualified workshop for this job.

Air cleaner

If the air cleaner is clogged with dust, there will be greater intake resistance, resulting in decreased power output and increased fuel consumption.

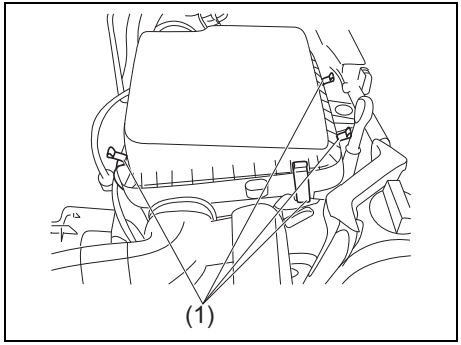

78RM70010

1) Unclamp the clamps (1).
2) Hold up the air cleaner upper case.
3) Remove the element from the air cleaner case. If it appears to be dirty, clean or replace it with a new one.
4) If the element is installed on the air cleaner case, confirm the mark of “FRONT” on the element and fit the boss of the element in the groove of the front on the air cleaner case.
5) Clamp the clamps securely.

Spark plugs

Spark plug replacement and inspection

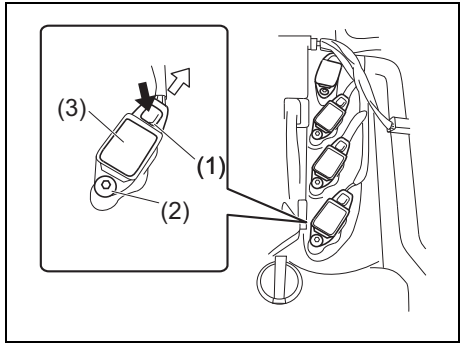

78RB07006

To access the spark plug:
1) Disconnect the coupler (1) while pushing the release lever.
2) Remove the bolt (2).
3) Pull out the ignition coil (3) straight.

NOTE:
During installation, check that the wires, couplers, sealing rubber of air cleaner chassis and washers, are correctly returned in place.

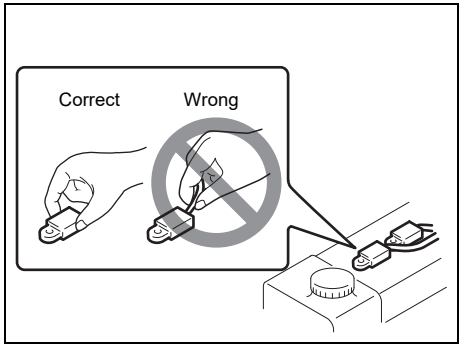

78K179

NOTICE

- **When pulling out the ignition coils, do not pull on the cable. Pulling on the cable can damage it.**
- **When servicing the iridium/platinum spark plugs (slender center electrode type plugs), do not touch the center electrode, as it is easy to be damaged.**

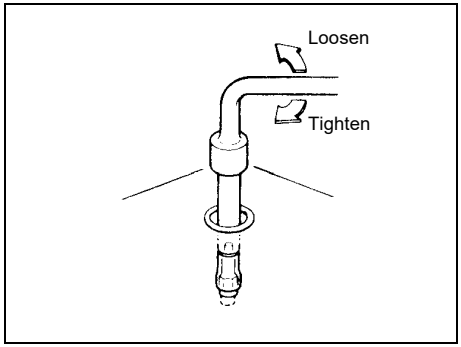

60G160

NOTICE

- **When installing the spark plugs, screw them in with your fingers to avoid stripping the threads. Tighten the spark plugs with a torque wrench to 17.5 Nm (1.7 kg-m, 12.9 lb-ft). Do not allow contaminants to enter the engine through the spark plug holes when the plugs are removed.**
- **Never use spark plugs with the wrong thread size.**

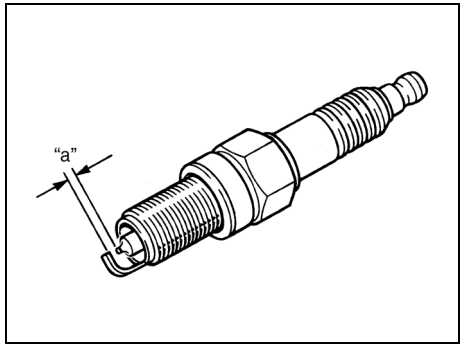

54G106

Spark plug gap "a":

ZXU20PR11
1.0-1.1mm (0.039-0.043 in.)
KR6A-10
0.95-1.05mm (0.037-0.041 in.)

NOTICE

When replacing spark plugs, you should use the brand and type specified for your vehicle. For the specified plugs, refer to "SPECIFICATIONS" section in the end of this book. If you wish to use a brand of spark plug other than the specified plugs, consult an authorized SUZUKI dealer or a qualified workshop.

Automatic Transmission (AT) fluid

Specified fluid

Use an automatic transmission fluid SUZUKI ATF3317 or Mobil ATF3309.

Fluid level check

NOTICE

Driving with too much or too little fluid can damage the transmission.

You must check the fluid level with the automatic transmission fluid at normal operating temperature.

To check the fluid level:
1) To warm up the transmission fluid, drive the vehicle or idle the engine until the engine coolant temperature light (blue color) goes off.
2) Then drive for ten more minutes.

NOTICE

Be sure to use the specified automatic transmission fluid. Using automatic transmission fluid other than SUZUKI ATF3317 or Mobil ATF3309 may damage the automatic transmission of your vehicle.

NOTE:
Do not check the fluid level if you have just driven the vehicle for a long time at high speed, or if you have driven in city traffic in hot weather. Wait until the fluid cools down (about 30 minutes), or the fluid level indication will not be correct.

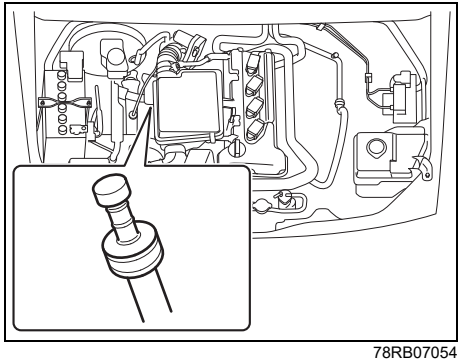

78RB07054

3) Park your vehicle on level ground.
4) Apply the parking brake and then start the engine in "P" (Park). Let it idle for two minutes and keep it running during the fluid level check.
5) With your foot on the brake pedal, move the gearshift lever through each gear, pausing for about three seconds in each range. Then move it back to the "P" (Park) position.

⚠ WARNING

Be sure to depress the brake pedal when moving the gearshift lever, or the vehicle can move suddenly.

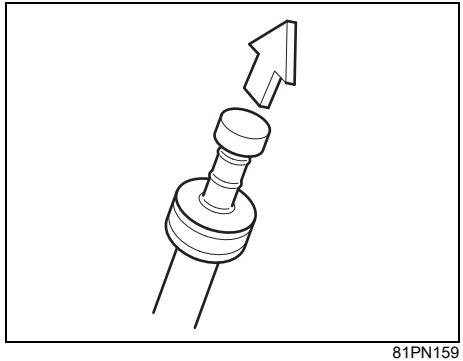

81PN159

6) Remove the dipstick, clean it and push it back in until the cap seats. Then pull out the dipstick.

7) Check both sides of the dipstick, and read the lowest level. The fluid level should be between the two marks in the hot range on the dipstick.

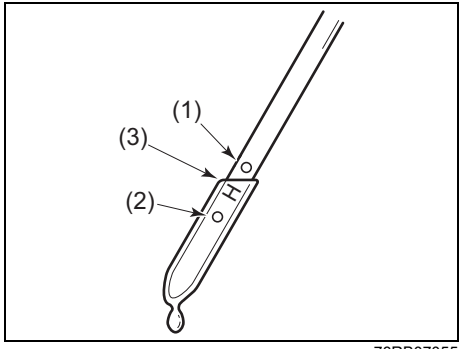

78RB07055

(1) FULL
(2) LOW
(3) The lowest point = Fluid level

8) Add just enough specified fluid through the dipstick hole to fill the transmission oil to the proper level.

NOTICE
After checking or adding oil, be sure to insert the dipstick securely.

Changing oil

Since special procedures, materials, and tools are required to change the automatic transmission oil, ask an authorized SUZUKI dealer or a qualified workshop for this job.

Gear oil

Manual transmission oil / transfer oil / rear differential oil

When adding gear oil, use gear oil with the appropriate viscosity and grade as shown in the chart below.

We highly recommend you use “SUZUKI GEAR OIL 75W” for manual transmission oil and transfer oil.

Manual transmission oil
Transfer oil

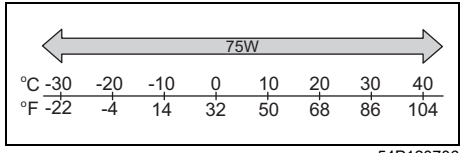

54P120706

We highly recommend you use “SUZUKI SUPER GEAR OIL 75W-85 SYNTHETIC” for front/rear differential oil.

Front/rear differential oil

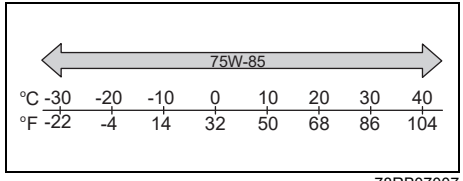

78RB07007

Gear oil level check

Manual transmission

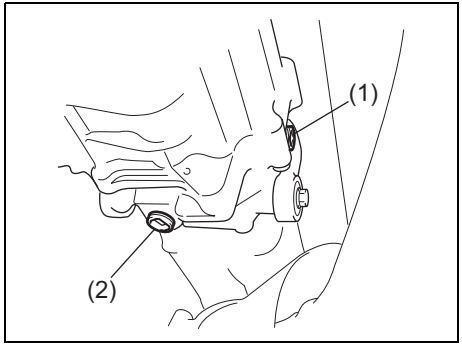

78RB07008

(1) Oil filler and level plug
(2) Oil drain plug

Transfer

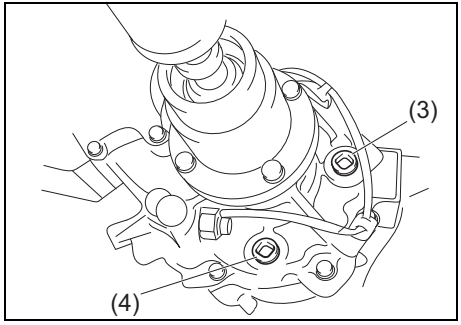

78RB07009

(3) Oil filter and level plug
(4) Oil drain plug

Front/rear differential

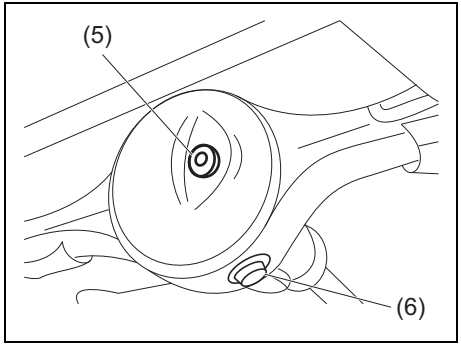

78RB07010

(5) Oil filter and level plug
(6) Oil drain plug

To check the gear oil level, use the following procedure:

1) Park the vehicle on a level surface with the parking brake applied. Then, stop the engine.
2) Remove the oil filler and level plug.

For the manual transmission;

3) If gear oil flows from the plug hole, the oil level is correct. Reinstall the plug. If gear oil does not flow from the plug hole, add oil through the filler plug hole until oil flows a little from the plug hole.

For the transfer and front/rear differential;

3) Check the inside of the hole with your finger. If the oil level comes up to the bottom of the plug hole, the oil level is correct. If so, reinstall the plug.
4) If the oil level is low, add gear oil through the oil filler and level plug hole until the oil level reaches the bottom of the filler hole, and then reinstall the plug.

Tightening torque for oil filler and level plug

Manual transmission (1)(2):
23 Nm (2.3 kg-m, 16.6 lb-ft)

Transfer (3)(4):
23 Nm (2.3 kg-m, 16.6 lb-ft)

Front/rear differential (5)(6):
(5)50 Nm (5.0 kg-m, 36.2 lb-ft)
(6)55 Nm (5.6 kg-m, 40.5 lb-ft)

⚠ CAUTION

After driving the vehicle, the gear oil temperature may be high enough to burn you. Wait until the oil filler and level plug are cool enough to touch with your bare hands before inspecting gear oil level.

NOTICE

Be sure to use new plug with new gasket to avoid looseness of the plug and oil leakage.

Gear oil change

Since special procedures, materials and tools are required, ask an authorized SUZUKI dealer or a qualified workshop for this job.

Brakes

Brake fluid

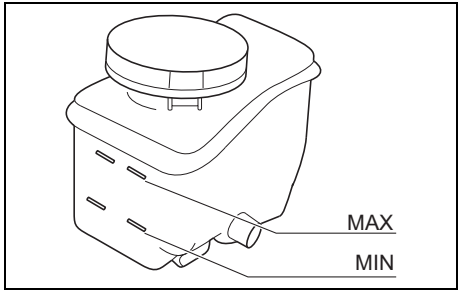

78RB07011

Check the brake fluid level by looking at the reservoir in the engine compartment. Check that the fluid level is between “MAX” and “MIN” lines.

NOTE:
SUZUKI highly recommends the use of ECSTAR brand brake fluid. ECSTAR has been specially formulated for your SUZUKI product and contributes to the desired vehicle performance and ideal driving experience.

⚠ WARNING

- **Failure to follow the guidelines below can result in personal injury or serious damage to the brake system.**
  - **If the brake fluid in the reservoir drops below a certain level, the brake warning light on the instrument cluster will come on (the engine must be running with the parking brake fully disengaged). Should the light come on, immediately ask an authorized SUZUKI dealer or a qualified workshop to inspect the brake system.**
  - **A rapid fluid loss indicates leakage in the brake system which should be inspected by an authorized SUZUKI dealer or a qualified workshop immediately.**
  - **Do not use any fluid other than DOT3 or SAE J1703 brake fluid. Do not use reclaimed fluid or fluid that has been stored in old or open containers. It is essential that foreign particles and other liquids are kept out of the brake fluid reservoir.**

(Continued)

⚠ WARNING

(Continued)

- **Brake fluid is harmful or fatal if swallowed, and harmful if it comes in contact with skin or eyes. If swallowed, do not induce vomiting. Immediately contact a poison control center or a physician. If brake fluid gets in eyes, flush eyes with water and seek medical attention. Wash thoroughly after handling. Solution can be poisonous to animals. Keep out of reach of children and animals.**

NOTICE

- **If your brake fluid level is near the "MIN" line, there is a possibility of brake pad and/or shoe wear and brake fluid leakage. Consult with an authorized SUZUKI dealer or a qualified workshop regarding this possibility before filling the reservoir.**
- **Brake fluid can harm your eyes and damage painted surfaces. Be careful when refilling the reservoir.**

NOTE:

- *The fluid level can be expected to gradually fall as the brake pad and/or shoe wear.*
- *Brake fluid absorbs water over time and brake fluid with high water content may cause vapor lock or brake system malfunction.*
  Replace your brake fluid in accordance with the maintenance schedule in your Owner's Manual.

Brake pedal

Check brake pedal stroke. If the stroke is so large, have the brake system inspected by an authorized SUZUKI dealer or a qualified workshop. If you doubt the brake pedal is at its normal height, check it as follows:

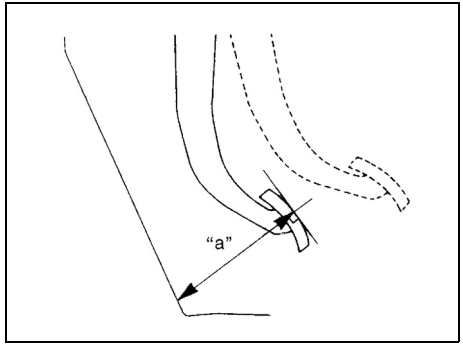

54G108

Minimum distance between brake pedal and floor carpet "a"

95 mm (3.7 in.)

With the engine running, measure the distance between the brake pedal and floor carpet when the pedal is depressed with approximately 30 kg (66 lbs) of force. The minimum distance required is as specified. Since your vehicle's brake system is self-adjusting, there is no need for pedal adjustment. If the pedal to floor carpet distance as measured above is less than the minimum distance required, have your vehicle inspected by an authorized SUZUKI dealer or a qualified workshop.

NOTE:
- *When measuring the distance between the brake pedal and floor wall, be sure not to include the floor mat or rubber on the floor carpet in your measurement.*
- *Measure the distance at the brake pedal's side facing toward the passenger's door.*

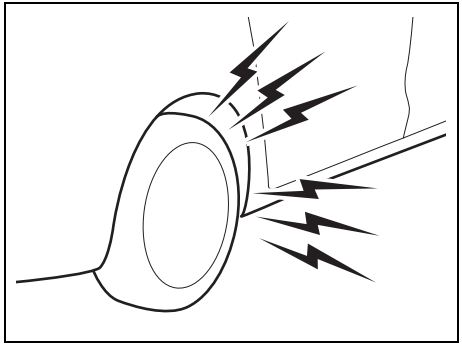

52RM70500

⚠ WARNING

If the brake pad lining becomes worn and it has reached its minimum thickness, squealing noise sounds during braking.
If you hear this noise, have the vehicle inspected immediately by an authorized SUZUKI dealer or a qualified workshop.
Continued driving with this condition can cause an accident.

⚠ CAUTION

If you experience any of the following problems with your vehicle's brake system, have the vehicle inspected immediately by an authorized SUZUKI dealer or a qualified workshop.
- **Poor braking performance**
- **Uneven braking (brakes not working uniformly on all wheels)**
- **Excessive pedal travel**
- **Brake dragging**

Parking brake

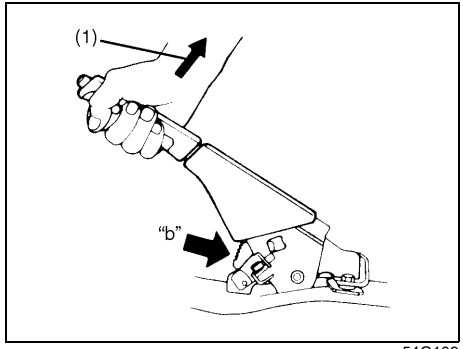

54G109

Ratchet tooth specification "b":
4th – 9th
Lever pull force (1):
200 N (20 kg, 45 lbs)

Check the parking brake for proper adjustment by counting the number of clicks made by the ratchet teeth as you slowly pull up on the parking brake lever to the point of full engagement. The parking brake lever should stop between the specified ratchet teeth and the rear wheels should be securely locked. If the parking brake is not properly adjusted or the brakes drag is suspected even after the lever has been fully released, have the parking brake inspected and/or adjusted by an authorized SUZUKI dealer or a qualified workshop.

Brake discs and brake drums

Brake disc

Brake location	Minimum thickness
Front wheels	8.0 mm (0.3 in.)

Brake drum

Brake location	Maximum inner diameter
Rear wheels	222 mm (8.74 in.)

If the measured thickness or inner diameter of the most worn part falls below or exceeds the value indicated above, the parts should be replaced with a new one. The measurement involves disassembling each brake and requires the use of a micrometer or caliper, which must be done according to the instructions described in the relevant service manual or available from the relevant repair information site.

Steering wheel

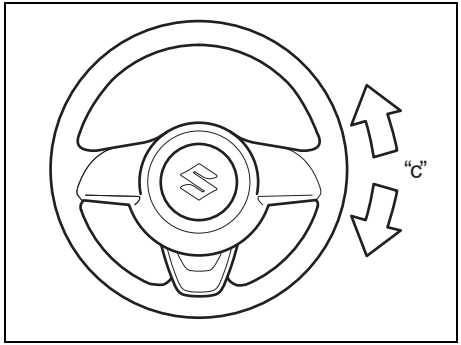

78RB07012

Steering wheel play "c":
0 – 30 mm (0.0 – 1.2 in.)

Check the free play of the steering wheel by gently turning it from left to right and measuring the distance that it moves before you feel slight resistance. The play should be between the specified values.

Check that the steering wheel turns easily and smoothly without rattling by turning it all the way to the right and to the left while driving very slowly in an open area. If the amount of free play is not as specified or you find anything else to be wrong, an inspection must be performed by an authorized SUZUKI dealer or a qualified workshop.

Tyres

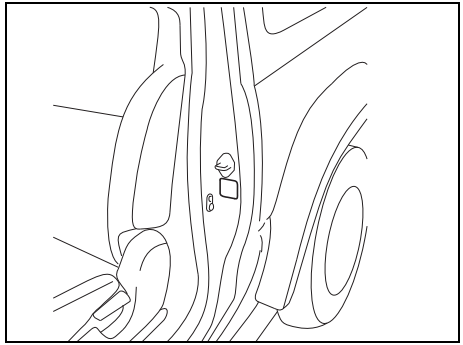

78RB07013

The front and rear tyre pressure specifications are listed in the tyre information label. Both front and rear tyres should have the specified tyre pressure.

NOTE:
The tyre pressure will change due to changes in atmospheric pressure, temperature or tyre temperature when driving. To reduce the chance that the low tyre pressure warning light (if equipped) will come on due to normal changes in temperature and atmospheric pressure, it is important to check and adjust the tyre pressures when the tyres are cold. If you check tyres after driving, they are warm. Even if the tyre pressure seems to be good in this condition, it could fall below the

specified pressure when tyres cool down. Also, tyres that are inflated to the specified pressure in a warm garage may have pressure below the specification when the vehicle is driven outside in very cold temperature. If you adjust the tyre pressure in a garage that is warmer than the outside temperature, you should add 1 kPa to the recommended cold tyre pressure for every 0.8°C difference between garage temperature and outside temperature.

Tyre inspection

Inspect your vehicle's tyres at least once a month or before long trip by performing the following checks:

1) Measure the air pressure with a tyre gauge. Adjust the pressure if necessary. Remember to check the spare tyre, too.

⚠ WARNING

- **Air pressures should be checked when the tyres are cold or you may get inaccurate readings.**
- **Check the inflation pressure from time to time while inflating the tyre gradually, until the specified pressure is obtained.**
- **Never under-inflate or over-inflate the tyres.**
  Under-inflation can cause unusual handling characteristics or can cause the rim to slip on the tyre bead, resulting in an accident or damage to the tyre or rim.
  Over-inflation can cause the tyre to burst, resulting in personal injury. Over-inflation can also cause unusual handling characteristics which may result in an accident.

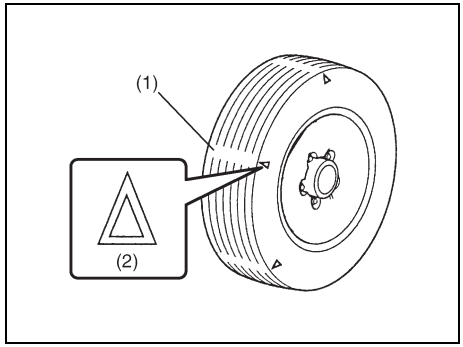

78RB07048

(1) Tread wear indicator
(2) Indicator location mark

2) Check that the depth of the tread groove is more than 1.6 mm (0.06 in.). To help you check this, the tyres have molded-in tread wear indicators in the grooves. When the indicators appear on the tread surface, the remaining depth of the tread is 1.6 mm (0.06 in.) or less and the tyre should be replaced.
3) Check for abnormal wear, cracks and damage. Any tyres with cracks or other damage should be replaced. If any tyres show abnormal wear, have them inspected by an authorized SUZUKI dealer or a qualified workshop.

⚠ CAUTION

Hitting curbs and running over rocks can damage tyres and affect wheel alignment. Have tyres and wheel alignment checked periodically by an authorized SUZUKI dealer or a qualified workshop.

4) Check for loose wheel nuts.
5) Check that there are no nails, stones or other objects sticking into the tyres.

⚠ WARNING

- **Your SUZUKI vehicle is equipped with tyres which are all the same type and size. This is important to ensure proper steering and handling of the vehicle. Never mix tyres of different size or type on the four wheels of your vehicle. The size and type of tyres used should be only those approved by SUZUKI as standard or optional equipment for your vehicle.**
  If accurate tyre rotation speed cannot be detected, following functions may not operate properly.
  – Some functions of SUZUKI SAFETY SUPPORT
- **Replacing the wheels and tyres equipped on your vehicle with certain combinations of aftermarket wheels and tyres can significantly change the steering and handling characteristics of your vehicle.**
- **Therefore, use only those wheel and tyre combinations approved by SUZUKI as standard or optional equipment for your vehicle.**

NOTICE

- **Replacing the original tyres with tyres of a different size may result in false speedometer or odometer readings. Check with an authorized SUZUKI dealer or a qualified workshop before purchasing replacement tyres that differ in size from the original tyres.**
- **Replacing a tyre with one of a different size, or using different brands among the four tyres can result in damage to the drive train.**

Tyre rotation

5-tyre rotation

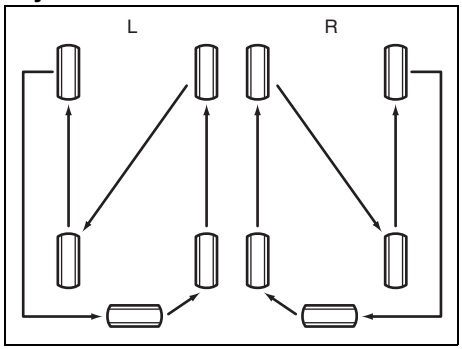

65D445

L: Left hand drive
R: Right hand drive

NOTE:
If your vehicle is equipped with the tyre pressure monitoring system, the spare tyre TPMS sensor must be recognized when you include the spare tyre during a tyre rotation. For details, refer to "Replacing Tyres and/or Wheels" in "Tyre Pressure Monitoring System (TPMS)" in the "OPERATING YOUR VEHICLE" section.

4-tyre rotation

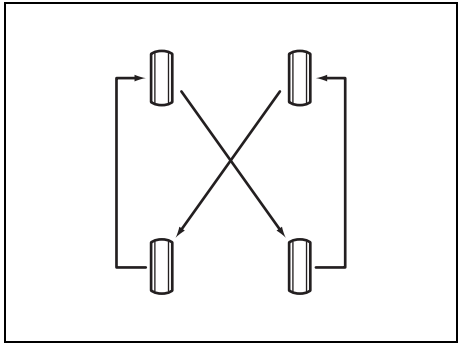

65D459

To avoid uneven wear of your tyres and to prolong their life, rotate the tyres as illustrated. Tyres should be rotated every 10000 km (6000 miles). After rotation, adjust front and rear tyre pressures to the specification listed on your vehicle's Tyre Information Label.

Changing Wheels

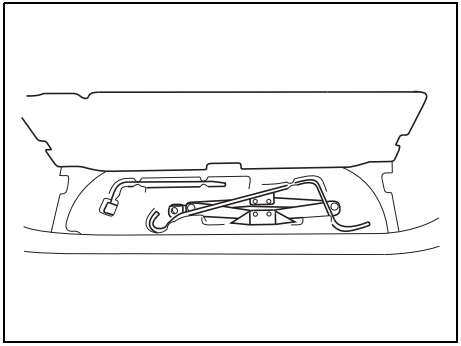

78RB07014

To change a wheel, use the following procedure:

1) Remove the jack, tools and spare wheel from the vehicle.

NOTE:
How to remove the spare wheel:

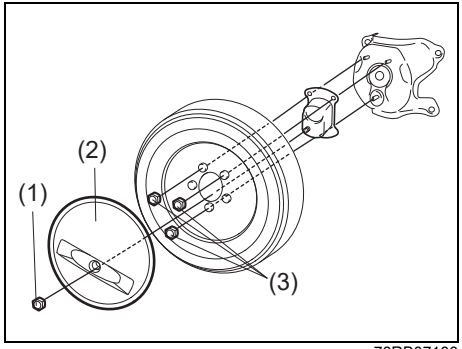

78RB07100

1. *Remove the center nut (1), then remove the spare wheel half cover (2) (if equipped).*
2. *Remove the wheel nuts (3) of the spare wheel, then remove the spare wheel with both hands.*

2) Loosen, but do not remove the wheel nuts.
3) Jack up the vehicle (follow the jacking instructions in the “EMERGENCY SERVICE” section in this manual)
4) Remove the wheel nuts and wheel.
5) Before installing the new wheel, clean any mud or dirt off from the surface of the wheel and hub with a clean cloth. Clean the hub carefully; it may be hot from driving.
6) Install the new wheel and replace the wheel nuts with their cone shaped end facing the wheel. Tighten each nut snugly by hand until the wheel is securely seated on the hub.

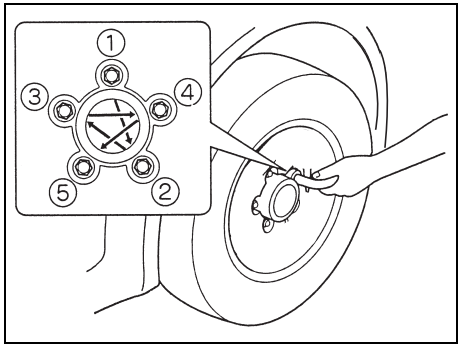

78RB07017

Tightening torque for wheel nut:
100 Nm (10.0 kg-m, 72.3 lb-ft)

7) Lower the jack and fully tighten the nuts in a crisscross fashion with a wrench as shown in the illustration.

⚠ WARNING

Use genuine wheel nuts and tighten them to the specified torque as soon as possible after changing wheels. Incorrect wheel nuts or improperly tightened wheel nuts may come loose or fall off, which can result in an accident. If you do not have a torque wrench, have the wheel nut torque checked by an authorized SUZUKI dealer or a qualified workshop.

NOTE:
How to install the spare wheel:

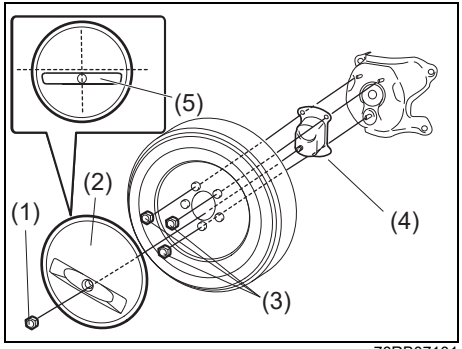

78RB07101

When you install a 195/80R15 spare wheel to the vehicle, set the spare tyre bracket (4) (if equipped) with the mark of "195" on up position. Tighten each nut (3) with the following torque. For vehicles equipped with the spare wheel half cover (2), when you install the spare wheel half cover, check that the hollow (5) of the cover is positioned below the center of the spare wheel half cover, and tighten the nut (1) with the following torque.

Tightening torque for nut (3):
80 Nm (8.2 kg-m, 59.0 lb-ft)

Tightening torque for nut (1):
29 Nm (3.0 kg-m, 21.5 lb-ft)

Battery

⚠ WARNING

- **Batteries produce flammable hydrogen gas. Keep flames and sparks away from the battery or an explosion may occur. Never smoke when working near the battery.**
- **When checking or servicing the battery, disconnect the negative cable. Be careful not to cause a short circuit by allowing metal objects to contact the battery posts and the vehicle at the same time.**
- **To avoid harm to yourself or damage to your vehicle or battery, follow the jump-starting instructions in "EMERGENCY SERVICE" section if it is necessary to jump-start your vehicle.**
- **Diluted sulfuric acid spilled from battery can cause blindness or severe burns. Use proper eye protection and gloves. Flush eyes or body with ample water and get medical care immediately if suffered. Keep batteries out of reach of children.**

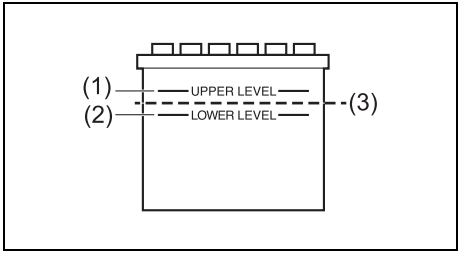

69TJ052070

For maintenance-free battery (cap-less type), you need not add water. For traditional type battery, which has water filler caps, the level of the battery fluid (acid) fluid (acid) must be kept between the upper level line (1) and lower level line (2) at all times. If the fluid level is lower than the intermediate line (3) between the upper level line (1) and lower level line (2), add distilled water to the upper level line (1). You should periodically check the battery, battery terminals, and battery hold-down bracket for corrosion. Remove corrosion using a stiff brush and ammonia mixed with water, or baking soda mixed with water. After removing corrosion, rinse with clean water.

If your vehicle is not going to be driven for a month or longer, disconnect the cable from the negative terminal of the battery to help prevent discharge.

⚠ WARNING

If the battery is used with battery level being less than the lower level line "MIN" (2), it may cause reduced battery life, an exothermic heat, or an explosion by hydrogen gas occurring from the battery. Do not use the battery with battery level being less than the lower level line "MIN" (2).

NOTICE

- **If the battery liquid is added more than the upper level line "MAX" (1), liquid may leak by vibrations during driving or liquid may spray out in some case depending on the condition of battery charging. These may cause damage to the parts near the battery. If the battery liquid overspills, immediately wash away with water. Do not add the battery liquid more than the upper level line "MAX" (1).**

(Continued)

NOTICE

(Continued)

- **If your vehicle is equipped with the idling stop system and the battery which is exclusive for the idling stop system is used, only use the specified type of battery for idling stop system. Refer to "SPECIFICATIONS" section for details. Otherwise, you could damage your vehicle, and the idling stop system could not be available. If a vehicle battery has to be replaced, consult an authorized SUZUKI dealer or a qualified workshop.**

NOTE:
The battery liquid is consumed when the battery is used. If the level is found to be less than the center of upper level "MAX" (1) and lower level "MIN" (2), add distilled water till it reaches the upper level line "MAX" (1).

Replacement of the battery

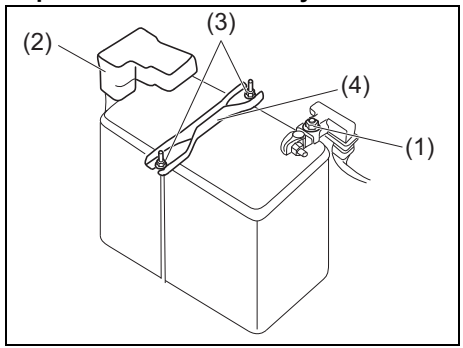

78RB07019

To remove the battery:
1) Disconnect the negative cable (1).
2) Disconnect the positive cable (2).
3) Remove the retainer nuts (3) and remove the retainer (4).

To install the battery:
1) Install the battery in the reverse order of removal.
2) Tighten the bracket bolt and battery cables securely.

NOTE:
- *When the battery is disconnected, some of the vehicle's functions will be initialized and/or deactivated.*
  These functions must be required to reset after the battery is reconnected.
- *Do not disconnect the battery terminals for at least one minute after the ignition switch is turned off, or the engine switch is pressed to change the ignition mode to "LOCK" (OFF).*

⚠ WARNING

Batteries contain toxic substances including sulfuric acid and lead. They could have potential negative consequences for the environment and human health. Used batteries must be disposed of or recycled according to applicable rules or regulations and must not be disposed of with ordinary household trash. Make sure not to tip over the battery when you remove it from the vehicle. Otherwise, sulfuric acid could run out and you might get injury.

NOTICE

After stopping the engine, controller and system are operated for a while. Therefore, before removing the battery, wait for more than one minute after turning the ignition switch to "OFF" or changing the ignition mode to "LOCK" (OFF).

(Battery label)

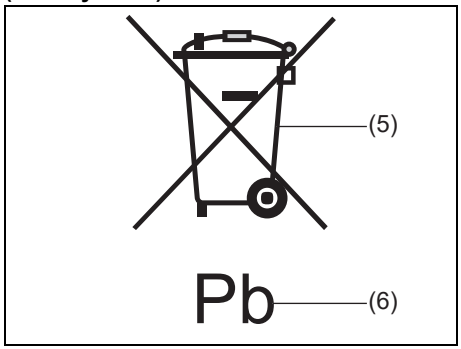

51KM042

(5) Crossed-out wheeled bin symbol
(6) Chemical symbol of "Pb"

The crossed-out wheeled bin symbol (5) located on the battery label indicates that the used battery should be collected separately from ordinary household trash. The chemical symbol of "Pb" (6) indicates the battery contains more than 0.004% lead.

By ensuring the used battery is disposed of or recycled correctly, you will help prevent potential negative consequences for the environment and human health, which could otherwise be caused by inappropriate trash handling of the battery. The recycling of materials will help to conserve natural resources. For more detailed information about disposing of or recycling the used battery, consult an authorized SUZUKI dealer or a qualified workshop.

Fuses

Your vehicle has three types of fuses, as described below:

Main fuse
The main fuse takes current directly from the lead-acid battery.

Primary fuses
These fuses are between the main fuse and individual fuses, and are for electrical load groups.

Individual fuses
These fuses are for individual electrical circuits.

To remove a fuse, use the fuse puller provided in the fuse box cover.

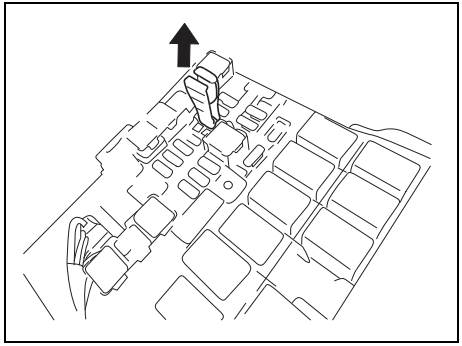

78RB07020

Fuses in engine compartment

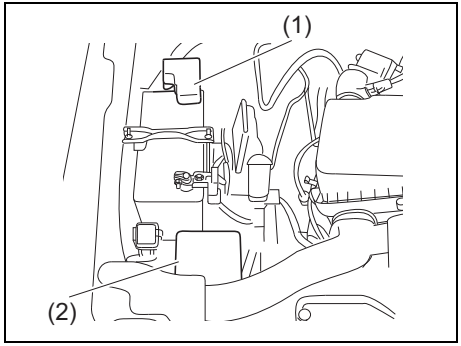

78RB07021

(1) Main fuse box
(2) Relay box

Main fuse box

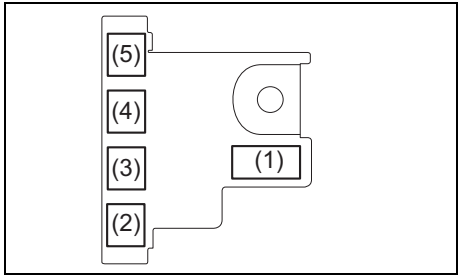

78RB07022

Relay box

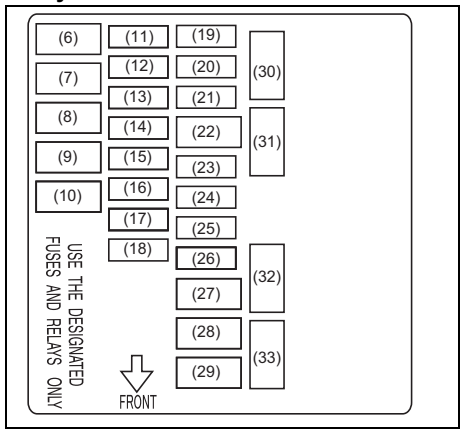

78RB07023

MAIN FUSE / PRIMARY FUSE		
(1)	120 A	FL1
(2)	100 A	FL2
(3)	80 A	FL3
(4)	100 A	FL4
(5)	50 A	FL5
(6)	50 A	Ignition switch
(7)	40 A	ABS motor
(8)	–	Blank

(9)	30 A	Blower fan
(10)	30 A	Starter motor
(11)	30 A	Headlight cleaner
(12)	15 A	Headlight (Right)
(13)	15 A	Headlight (Left)
(14)	25 A	ABS/ESP® control module
(15)	30A	DCDC1
(16)	15 A	Ignition coil
(17)	25 A	Headlight high
(18)	30 A	Back up
(19)	30A	DCDC2
(20)	15 A	Fuel injection
(21)	15 A	Transmission
(22)	50 A	Ignition sw2
(23)	10 A	A/C compressor
(24)	10 A	4WD
(25)	20 A	Front fog light
(26)	–	Blank
(27)	40 A	Power steering
(28)	–	Blank
(29)	40 A	Radiator fan
(30)	15 A	Transimssion 2
(31)	5 A	Starter signal
(32)	15 A	Headlight high (Left)
(33)	15 A	Headlight high (Right)

The main fuse, primary fuses and some of the individual fuses are located in the engine compartment. If the main fuse blows, no electrical component will function. If a primary fuse blows, no electrical component in the corresponding load group will function. When replacing the main fuse, a primary fuse or an individual fuse, use a genuine SUZUKI replacement parts or equivalent for individual fuses.
To remove a fuse, use the fuse puller provided in the fuse box. The amperage of each fuse is shown in the back of the fuse box cover.

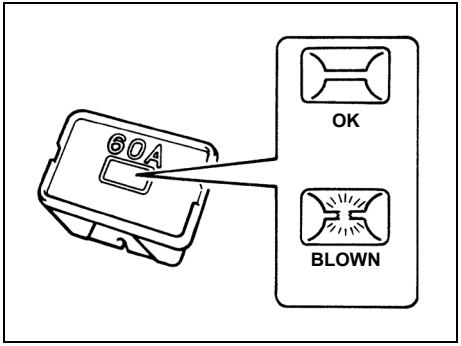

60G111

⚠ WARNING

If the main fuse or a primary fuse blows, have your vehicle inspected by an authorized SUZUKI dealer or a qualified workshop. Always use a genuine SUZUKI replacement. Never use a substitute such as a wire even for a temporary repair, or extensive electrical damage and a fire can result.

NOTE:
Check that the fuse box always carries spare fuses.

Fuses under dashboard 1

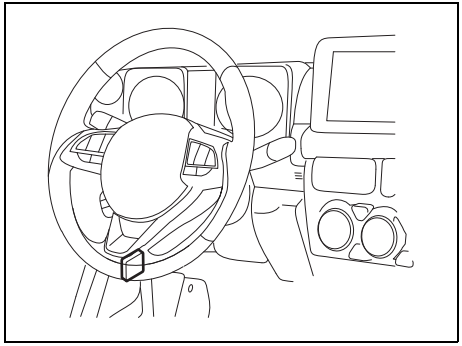

78RB07024

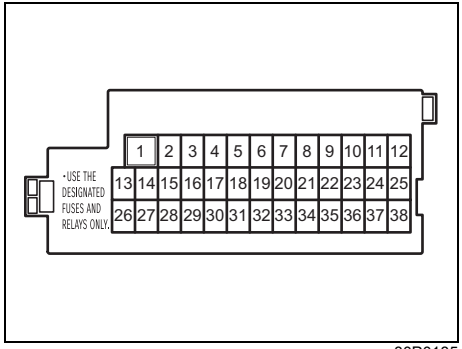

80P0185

PRIMARY FUSE		
(1)	30 A	Power window
(2)	10 A	Meter
(3)	15 A	Engine Control Module
(4)	5 A	Ignition-1 signal 2
(5)	20 A	Shift lever
(6)	10 A	Charger
(7)	10 A	Steering lock 2
(8)	20 A	Door lock
(9)	15 A	Steering lock
(10)	10 A	Hazard
(11)	5 A	A-STOP
(12)	10 A	Rear fog lamp
(13)	5 A	ABS/ESP® control module
(14)	15 A	Seat heater
(15)	5 A	Ignition-1 signal 3
(16)	10 A	Dome light-2
(17)	5 A	Dome light
(18)	15 A	Radio
(19)	5 A	CONT
(20)	5 A	Key 2
(21)	20 A	Power window timer
(22)	5 A	Key
(23)	15 A	Horn
(24)	5 A	Tail light (Left)
(25)	10 A	Tail light
(26)	10 A	Airbag
(27)	10 A	Ignition-1 signal
(28)	10 A	Back-up light
(29)	5 A	ACC-3
(30)	20 A	Rear defogger
(31)	10 A	Heated mirror
(32)	15 A	ACC-2
(33)	5 A	ACC
(34)	10 A	Rear wiper
(35)	5 A	Ignition-2 signal
(36)	15 A	Washer
(37)	25 A	Front wiper
(38)	10 A	Stop light

Fuses under dashboard 2 (if equipped)

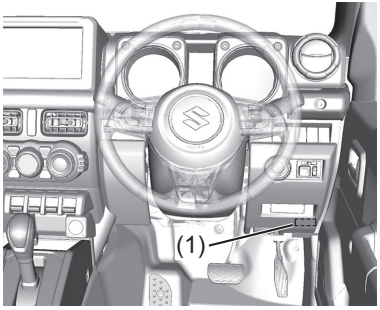

77R70620

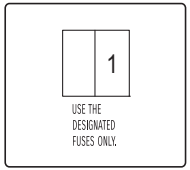

77R70630

PRIMARY FUSE		
(1)	10 A	Ignition-1 signal 4

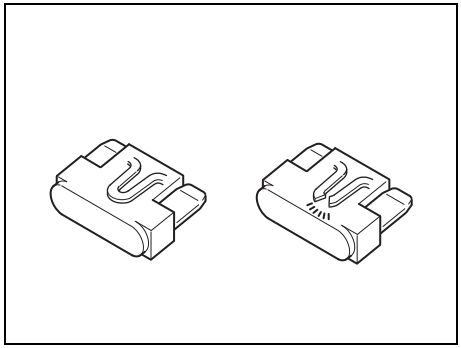

81A283

⚠ WARNING

- **Always replace a blown fuse with a fuse of the same amperage and the same size which is equipped with your vehicle. Never use other objects than specified above to replace a blown fuse. Otherwise, wiring may burn out and it may cause a fire.**
- **If you replace a fuse and the new one blows in a short period of time, you may have a major electrical problem. Have your vehicle inspected immediately by an authorized SUZUKI dealer or a qualified workshop.**

Headlight aiming

Since special procedures are required, ask an authorized SUZUKI dealer or a qualified workshop for this job.

Headlight washer fluid

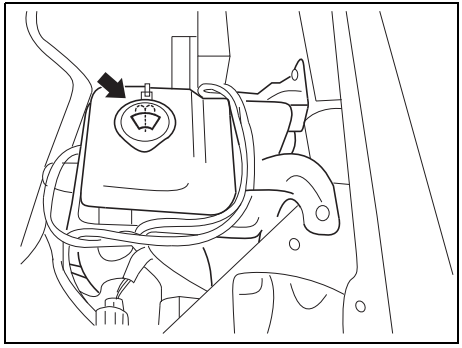

78RB07046

Check that there is washer fluid in the tank. Refill it if necessary.

NOTICE

- **In winter season, be sure to remove snow or ice on the nozzle at the front bumper before operating headlight washer.**
- **To avoid the frozen damage to the nozzle of the headlight washer, be sure to use the specific washer fluid.**

Bulb replacement

⚠ CAUTION

- **Light bulbs can be hot enough to burn your finger right after turning off lights. This is true especially for halogen headlight bulbs. Replace the bulbs after they become cool enough.**
- **The headlight bulbs are filled with pressurized halogen gas. They can burst and injure you if they are hit or dropped. Handle them carefully.**
- **To avoid injury by sharp-edged parts of the body, wear gloves and a long-sleeved shirt when replacing light bulbs.**

NOTICE

The oils from your skin may cause a halogen bulb to overheat and burst when the lights are on. Grasp a new bulb with a clean cloth.

NOTICE

Frequent bulb replacement indicates the need for an inspection of the electrical system. This should be carried out by an authorized SUZUKI dealer or a qualified workshop.

NOTE:
The inner surface of lens such as the headlights or the rear combination lights may be clouded or dew condensation may occur by driving on a rainy day or washing the vehicle. This is a temporary phenomenon caused by temperature difference between the inside and the outside of the lights. (This is the same phenomenon as the windows are clouded on a rainy day.) Also, it sometimes seems that water gets into the lights because of waterdrop on the edge of the lens. This is a temporary phenomenon caused by water adherence to the outside of the lights.
The above-mentioned phenomena are not vehicle malfunction.
However, if water is piled up in the lights or large waterdrop adheres to the inner surface of lens, have your vehicle inspected by an authorized SUZUKI dealer or a qualified workshop.

Non-disassembled type lights

Since the lights shown below are non-disassemble type, you cannot replace a bulb. Replace the target assembly if any light is defective.
If you need to replace the assembly, ask an authorized SUZUKI dealer or a qualified workshop.

- LED headlight
- Side turn signal light/hazard warning light on fender or outside rearview mirrors
- High mount stop light
- Position light (vehicle with LED headlights)
- LED License plate light (if equipped)

Headlights

LED type
Since special procedures are required, it is recommended that you take your vehicle to an authorized SUZUKI dealer or a qualified workshop for light replacement.

Halogen type

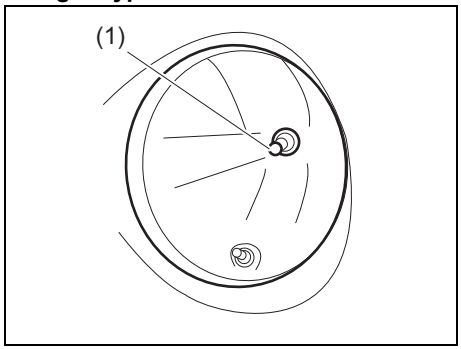

78RB07025

(1) Bulb

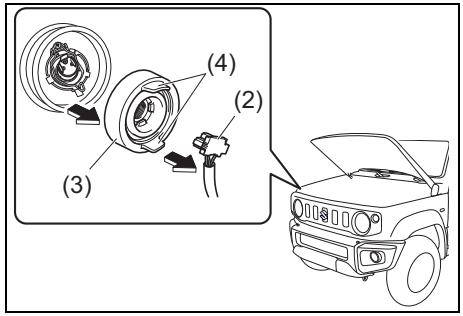

78RB07026

1) Open the engine hood while the engine is stopped. Disconnect the coupler (2). Remove the sealing rubber (3) by pulling the grip (4).

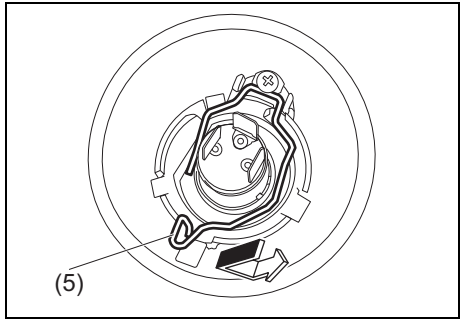

78RB07027

2) Push the retaining spring (5) forward and unhook it. Then remove the bulb. Install a new bulb in the reverse order of removal.

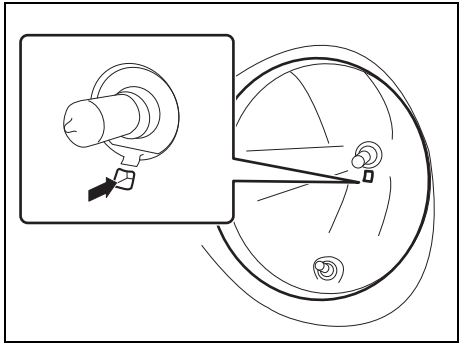

78RB07028

NOTE:
You can see the position of retaining spring from the hole of headlight.

Front turn signal light and front position light

For front LED position light (if equipped), it is recommended that you take your vehicle to an authorized SUZUKI dealer or a qualified workshop for light replacement since special procedures are required.

Vehicle with the halogen headlights

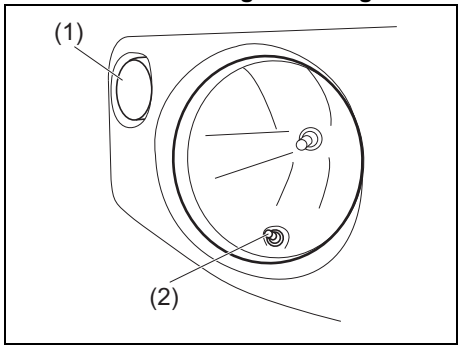

78RB07029

(1) Front turn signal light
(2) Front position light

Vehicle with the LED headlights

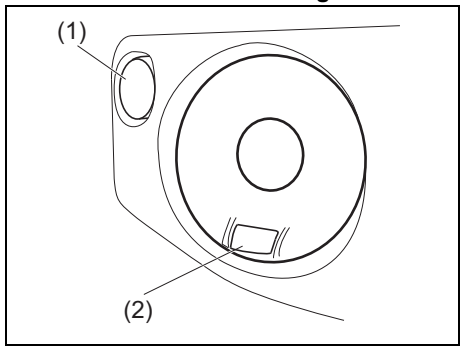

78RB07030

(1) Front turn signal light
(2) Front LED position light

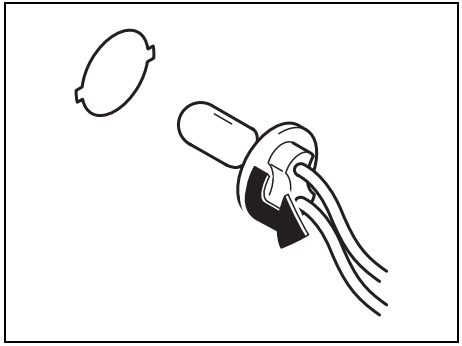

68PH00732

1) Open the engine hood while the engine is stopped. To remove the bulb holder of the front turn signal light or the front position light (for vehicle with halogen headlights) from the light housing, turn the holder counterclockwise and pull it out.

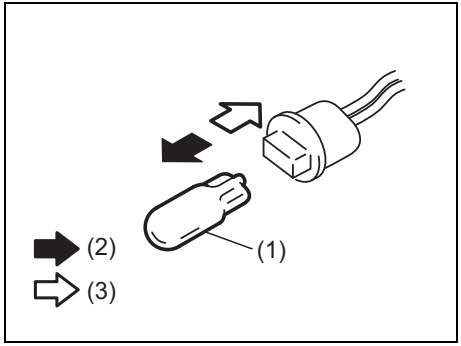

78RB07051

(2) Removal
(3) Installation

2) To remove and install the bulb of the front position light (1), simply pull out or push in the bulb.

Side turn signal light

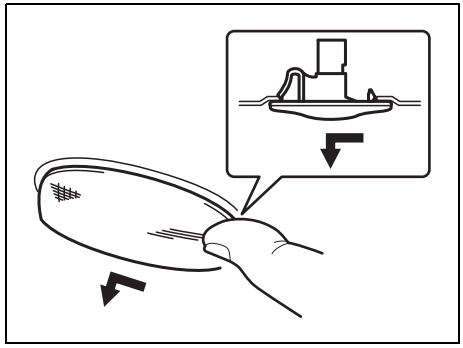

78RB07031

Since the bulb is built-in type, replace it as the light assembly. Remove the light assembly by sliding the light housing leftward with your finger.

Front fog light

1) Start the engine. Turn the steering wheel to the opposite side of the fog light to be replaced to replace the bulb easily. Then turn off the engine.

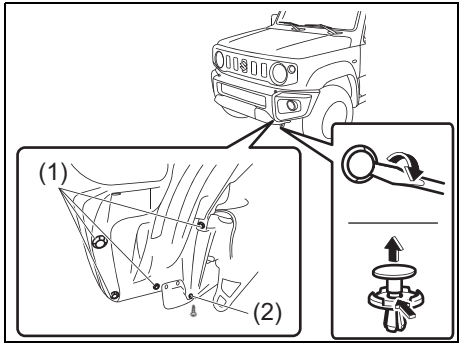

78RB07032

2) Remove the clips (1) and screw (2) at the bottom of bumper.
For removing the clip, use a flat-bladed screwdriver as shown in the illustration.

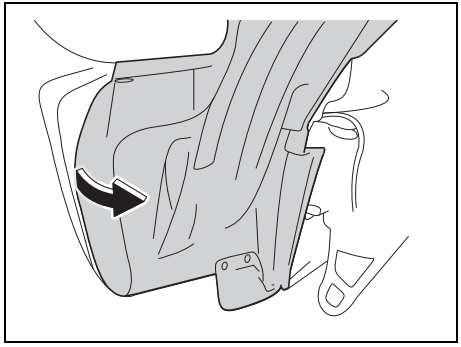

78RB07033

1) Open the end of the cover inside the fender.

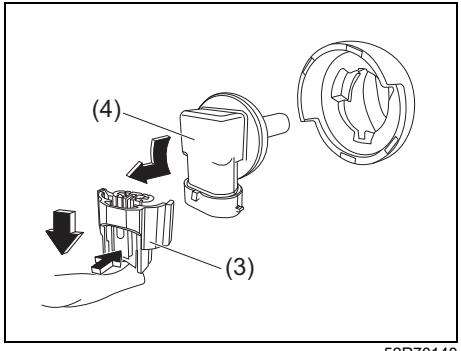

52R70140

2) Disconnect the coupler (3) by pushing the lock release. Turn the bulb holder (4) counterclockwise and remove it.

Daytime running light (if equipped)

Models without front fog light

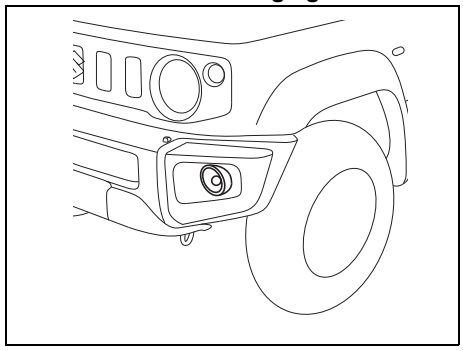

78RB07034

Models with front fog light

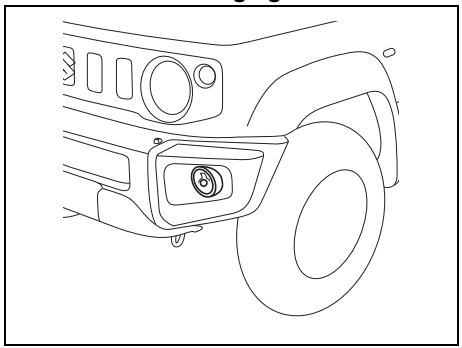

78RB07035

1) To approach the daytime running light, open the end of the cover inside the front fender. Refer to the procedure for the bulb replacement of the “Front Fog Light” in this section.

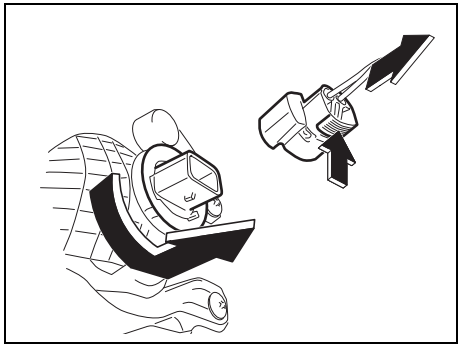

78RB07049

2) Disconnect the coupler by pushing the lock release. Turn the bulb holder counterclockwise and remove it.

NOTE:
Depending on the vehicle’s specification, the daytime running light is located under the front fog light, but the replace method is same as the above.

Rear combination light

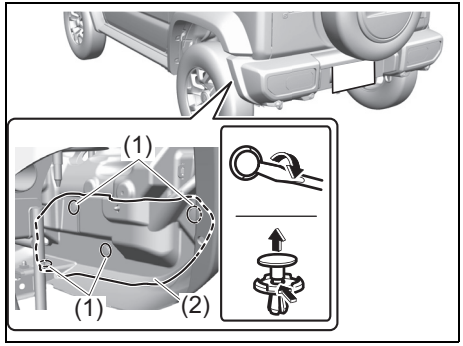

85U060010

1) Remove the clips (1) and then remove the cover (2).

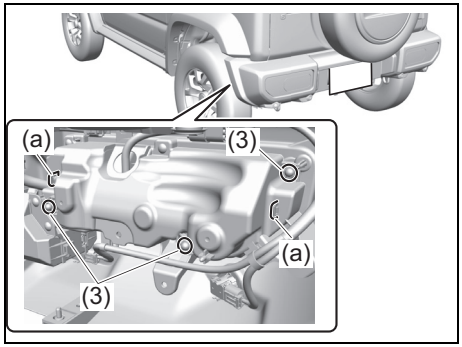

85U060020

2) Remove the nuts (3) and pull the rear combination light from the rear bumper by pushing the hooks (a).

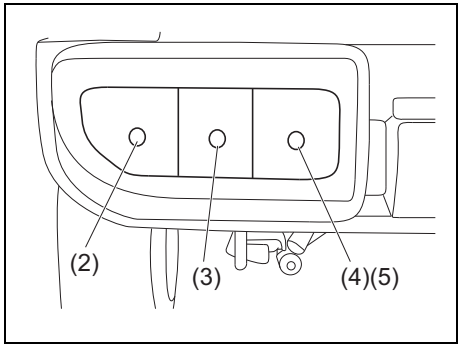

78RB07037

(2) Brake/tail light
(3) Rear turn signal light
(4) Reversing light
(5) Rear fog light (if equipped)

3) To remove the bulb holder of the above light from the light housing, turn the holder counterclockwise and pull it out.

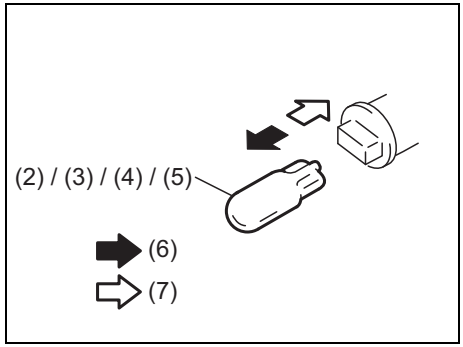

78RB07038

(6) Removal
(7) Installation

4) To remove and install the bulb of the brake/tail light (2), the rear turn signal light (3), the reversing light (4), or the rear fog light (5) (if equipped), simply pull out or push in the bulb.

License plate light

LED type

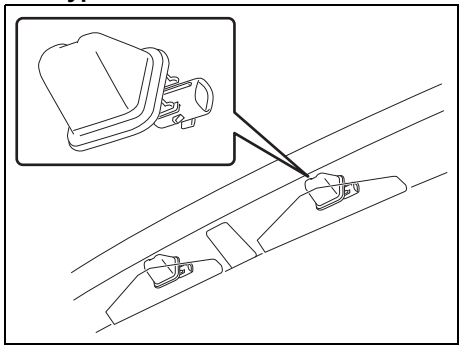

52RM90001

Since special procedures are required, it is recommended that you take your vehicle to an authorized SUZUKI dealer or a qualified workshop for light replacement.

Bulb type

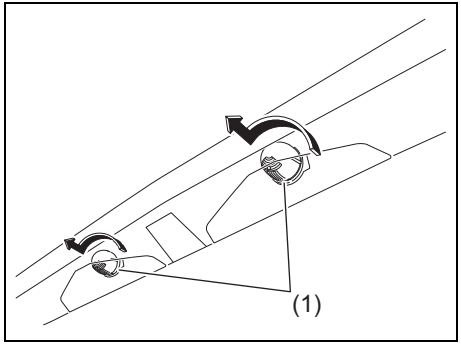

52RM70070

1) Remove the cover (1) by turning it counterclockwise.

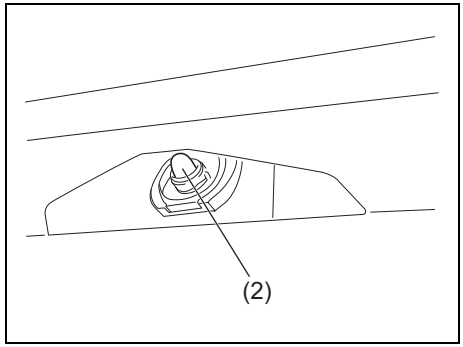

76MH0A126

2) To remove and install the bulb of the license plate light (2), simply pull out or push in the bulb.

High-mount stop light

LED is used. It is recommended that you take your vehicle to an authorized SUZUKI dealer or a qualified workshop for bulb replacement since special procedures are required.

Interior light

Front

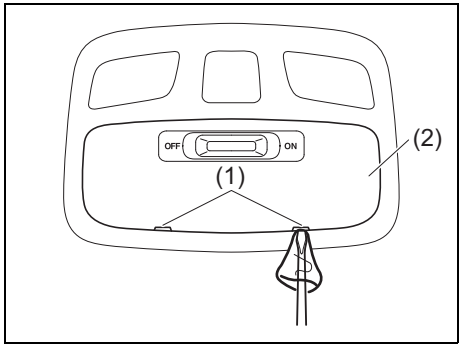

85U060060

1) To prevent scratches, insert a commercially available flat-blade screwdriver covered with a soft cloth into the notch (1), and then remove the lens (2).

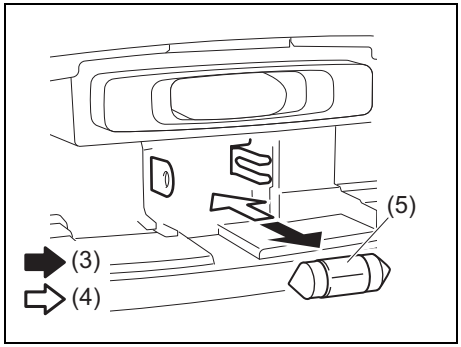

69T090320

(3) Removal
(4) Installation

2) Pull the bulb (5) out and then insert a new one.
3) After replacing the bulb, install the front interior light lens in the reverse order of removal.

Luggage compartment (if equipped)

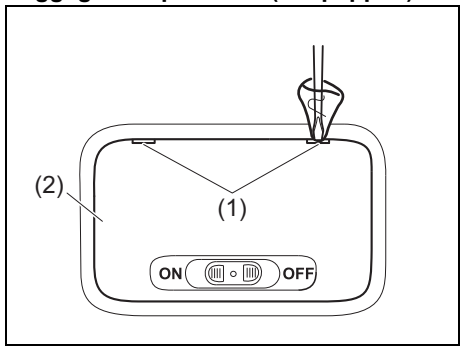

85U060070

1) To prevent scratches, insert a commercially available flat-blade screwdriver covered with a soft cloth into the notch (1), and then remove the lens (2).

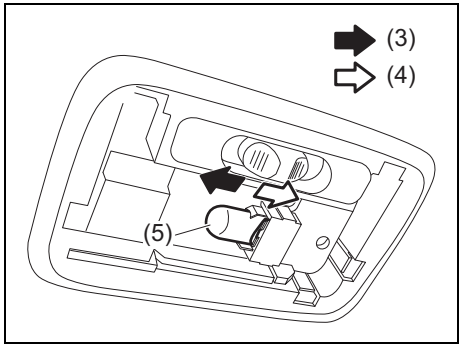

85U060080

(3) Removal
(4) Installation

2) Pull the bulb (5) out and then insert a new one.
3) After replacing the bulb, install the front interior light lens in the reverse order of removal.

Wiper blades

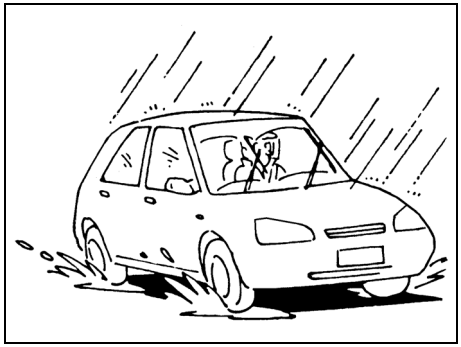

54G129

If the wiper blades become brittle or damaged, or make streaks when wiping, replace the wiper blades.

To install new wiper blades, follow the procedures below.

NOTICE
To avoid scratching or breaking the window, do not let the wiper arm strike the window while replacing the wiper blade.

NOTE:
Some wiper blades may be different from the ones described here depending on vehicle specifications. If so, consult an authorized SUZUKI dealer or a qualified workshop for proper replacement method.

For windshield wipers:

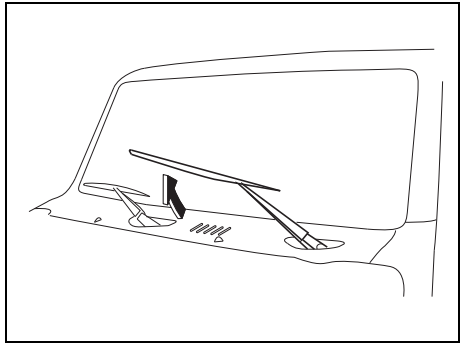

78RB07040.

1) Hold the wiper arm away from the window.

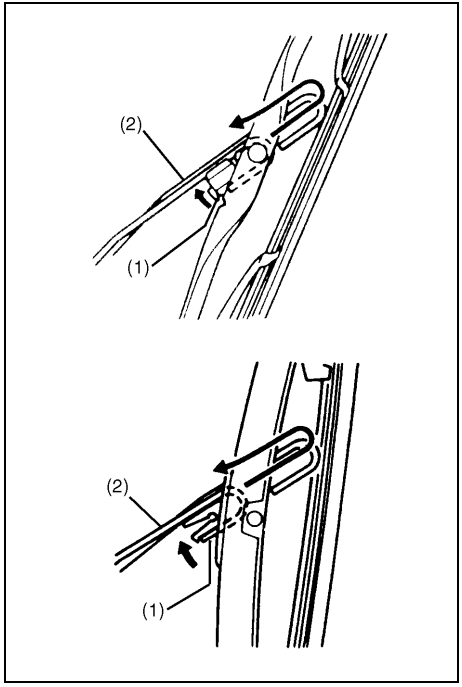

54G130

2) Squeeze lock (1) towards wiper arm (2) and remove the wiper frame from the arm as shown.
3) Unlock the lock end of the wiper blade and slide the blade out as shown.

(Removal)

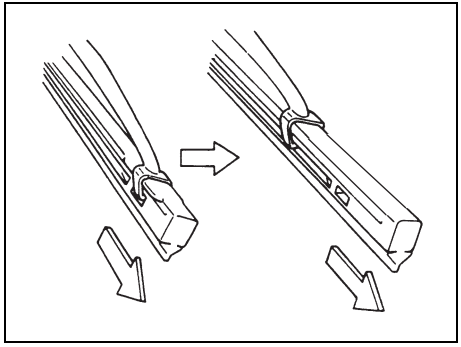

78RB07045.

(Installation)

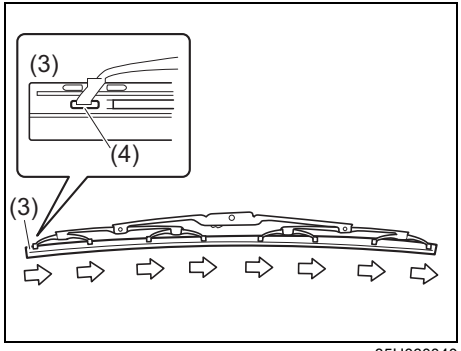

85U060040

(3) Locked end
(4) Stopper side

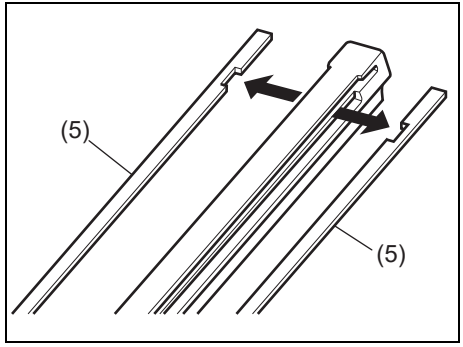

85U060050

(5) Retainer

4) If the new blade is provided without the two metal retainers, move them from the old blade to the new one.
5) Install the new blade in the reverse order of removal, with the locked end positioned toward the wiper arm. Make sure the blade is properly retained by all the hooks. Lock the blade end into place.

NOTICE

Fit the stopper side (4) of the wiper blade in the driver's seat side. Otherwise, the wiper blade may be misaligned while the wiper operates.

6) Reinstall wiper frame to arm, making sure that the lock lever is snapped securely into the arm.

For rear windshield wipers:

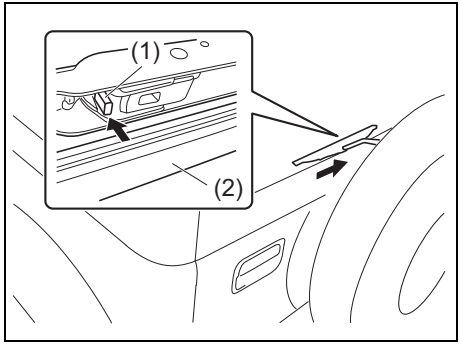

78RB07047

(1) Lock end
(2) Blade rubber

1) Lift the rear wiper arm a little from the rear window. Remove the wiper frame from the rear wiper arm by pushing the lock end (1) from the side of wiper blade frame and then by pushing the wiper frame to the direction of the arrow with the lock end (1) free from locking in the above illustration.

NOTE:
Return the rear wiper arm slowly after removing the rear wiper blade.

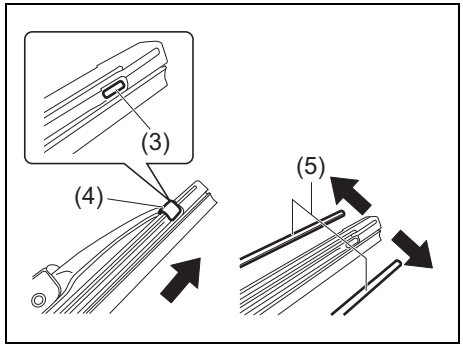

77R60050

(3) Stopper
(4) Hook
(5) Retainer

2) Pull and remove the wiper blade rubber from the wiper frame until the stopper (3) of the wiper frame is taken out of the hook (4). Remove the retainers (5) from the wiper blade.

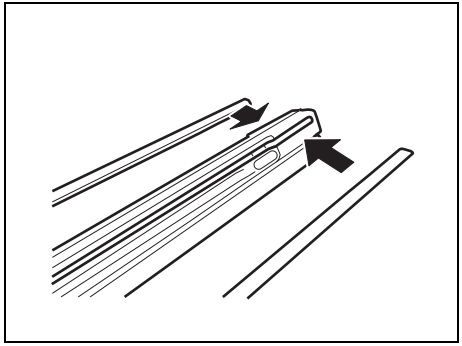

63R60160

3) If the new blade is provided without the two metal retainers, install them from the old blade to the new one.

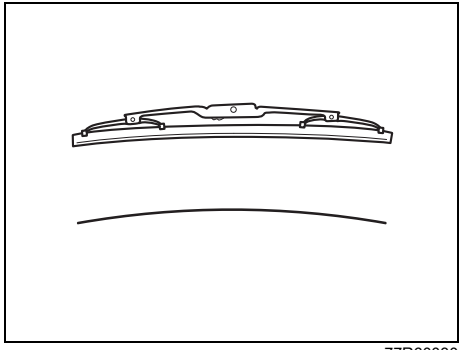

77R60030

4) Install the retainers along the direction of camber as shown in the illustration.

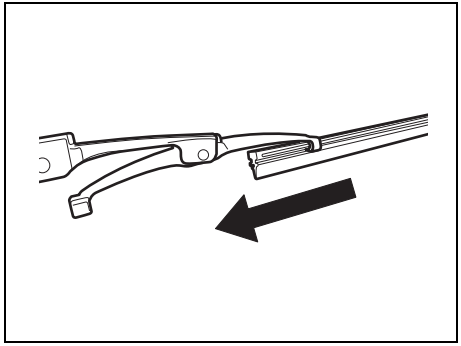

63R60180

5) Slide the new wiper blade into the wiper frame. When installing the blade rubber, put into the side that has no stopper on the wiper blade.

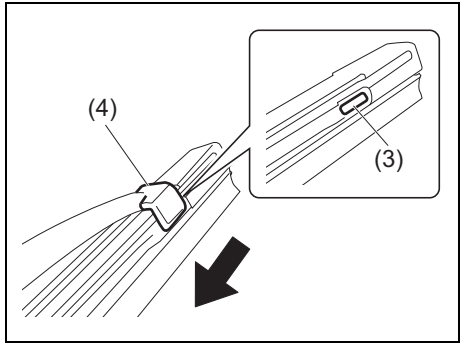

77R60060

(6) Stopper
(7) Hook

6) Fix the wiper blade securely by pushing the hook (7) into the stopper (6).

7) Reinstall the wiper frame to the rear wiper arm in the reverse order of removal. Make sure that the rear wiper blade is installed securely.

Windshield washer fluid

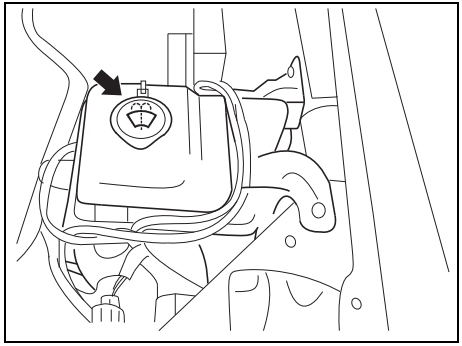

78RB07046

Check that there is washer fluid in the tank. Refill it if necessary. Use a good quality windshield washer fluid, diluted with water as necessary.

NOTE:
SUZUKI highly recommends the use of ECSTAR brand windshield washer fluid. ECSTAR has been specially formulated for your SUZUKI product and contributes to the desired vehicle performance and ideal driving experience.

⚠ WARNING

- **Do not use radiator antifreeze in the windshield washer reservoir. This can severely impair visibility when sprayed on the windshield, and also can damage your vehicle's paint.**
- **Do not add washer fluid when the EV system is hot or running as washer fluid contains alcohol and may catch fire if spilled on the EV system, etc.**

⚠ CAUTION

Precautions for handling the washer fluid are written on the container.
Refer to the instruction and read it carefully.

NOTICE

Damage may result if the washer motor is operated with no fluid in the washer tank.

Air conditioning system

If you do not use the air conditioner for a long period, such as during winter, it may not give the best performance when you start using it again. To help maintain optimum performance and durability of your air conditioner, it needs to be run periodically. Operate the air conditioner at least once a month for one minute with the engine idling. This circulates the refrigerant and oil and helps protect the internal components.

Air conditioner filter replacement

Since special procedures are required, ask an authorized SUZUKI dealer or a qualified workshop for this job.

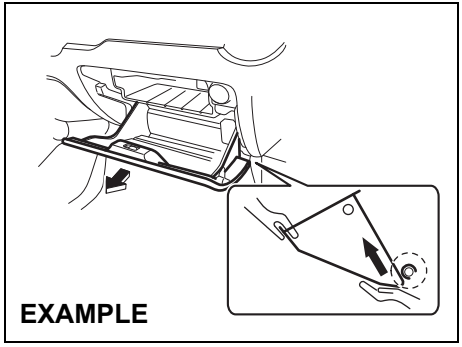

85U060030

1) Open the glove box. Push the lower edge upwards to disengage the fitting at the dashed section, and then pull the glove box in the direction of the arrow to remove it. To reinstall, follow the reverse procedure.

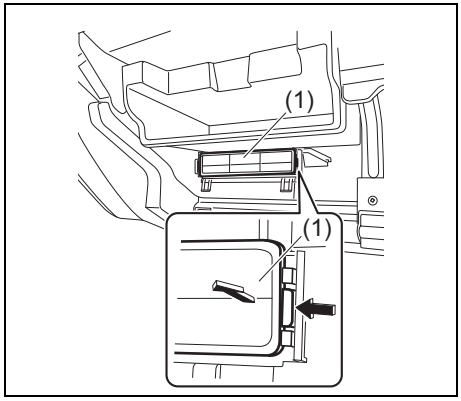

73SB47030

2) Unlock the holder (1) and release it from the air conditioner unit.

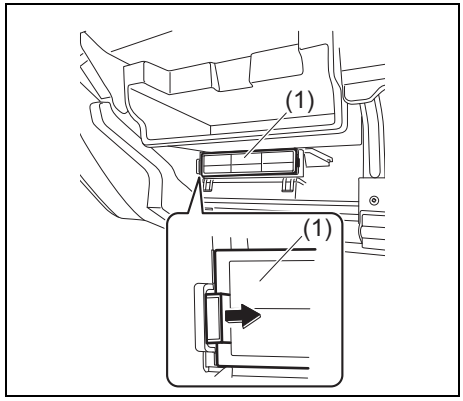

73SB47010

3) Slide the tab of the holder (1) in an arrow direction and remove the holder.

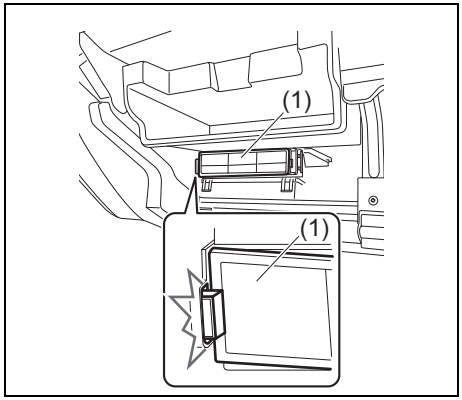

73SB47020

NOTICE

Do not apply excessive force to the tab when removing the holder (1). Otherwise, the tab may be damaged.

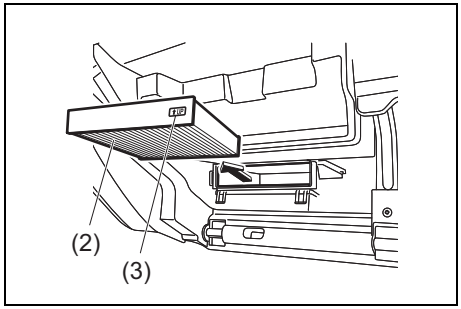

73SB47040

4) Pull out the air conditioner filter (2).

NOTE:
When you install a new air conditioner filter, check that the UP mark (3) faces upward.

Preparation before winter Season

Windshield washer fluid

To prevent windshield washer fluid from freezing, dilute it by the ratio according to outside temperature.

Lead-acid battery

Check the liquid measure and the specific gravity of lead-acid battery. When it becomes cold, the battery performance gets worse. Also, it becomes difficult to start the engine by the weak battery. Refer to “Battery” in the this section.

Engine coolant

To prevent the inside of engine from corroding and freezing, use the designated engine coolant. Refer to “Specifications” in the “SPECIFICATIONS” section.

NOTE:
To check the concentration of engine coolant or replace it, ask an authorized SUZUKI dealer or a qualified workshop.

Winter tyres and chocks

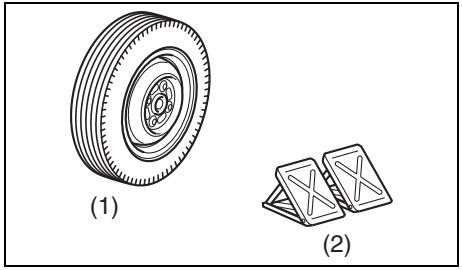

55T090670

(1) Winter tyre
(2) Chock

Winter tyres and chocks are necessary to drive on the snow roads or the frozen roads.

Before your driving

Snow on the Roof



80J308

Remove snow on the roof before your driving. If you do not remove it, snow may fall during your driving and it may hinder your view.

- For vehicle equipped with Dual Sensor Brake Support II (DSBS II), the Dual Sensor Brake Support II (DSBS II) may not operate properly when there is snow or frost on the windshield.

Frozen Wiper Blades

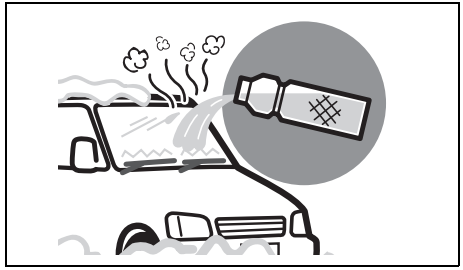

65P60060

Melt ice by pouring lukewarm water. After melting it, wipe off water to prevent refreezing. If you operate the wiper blades forcedly when ice stays freezing, the wiper rubbers may be damaged and the wiper blades may be broken.

Snow and Frost on the Window Glasses

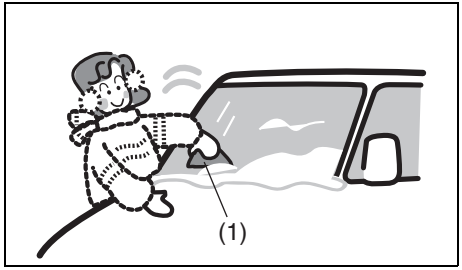

82K261

Use the plastic board (1). You can remove snow and frost not to damage the window glasses.

- For vehicle equipped with Dual Sensor Brake Support II (DSBS II), the Dual Sensor Brake Support II (DSBS II) may not operate properly when there is snow or frost on the windshield.

Snow around the ultrasonic sensors

Remove the snow around the ultrasonic sensors before driving. If there is snow or frost around the ultrasonic sensors, the low speed brake support at a low speed (forward and backward) (if equipped), and parking sensor may not work properly.

Frozen Outside Rearview Mirrors

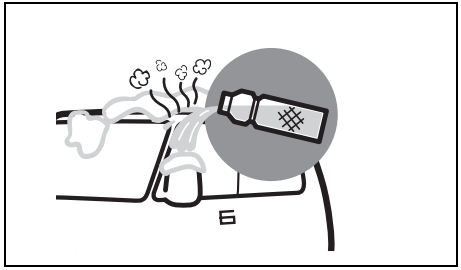

65P60070

Melt ice by pouring lukewarm water. After melting it, wipe off water to prevent refreezing. If you operate the outside rearview mirrors forcedly when ice stays freezing, the outside rearview mirrors may be broken.

NOTICE

- **For vehicle with outside rearview mirror folding switch, check if you can move the mirrors by your hands first. Then, operate the switch. If you repeat to operate the switch when ice stays freezing, the mirrors may be broken.**
- **For vehicle with remote folding mirrors, deactivate the function of the remote folding mirrors in the cold condition where the outside rearview mirrors are frozen. If you repeat to operate them when ice stays freezing, the mirrors may be broken.**

Frozen Doors

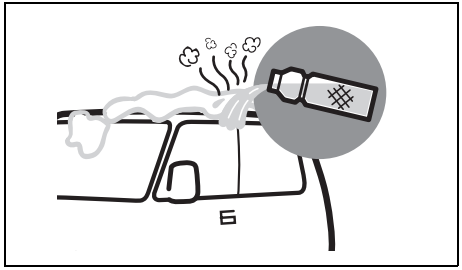

65P60080

Pour lukewarm water except the keyhole on the door. After opening the door, wipe off water. If you open the door forcedly when ice stays freezing, the rubbers around the door may be come off and broken.

Snow Attaching to Shoes

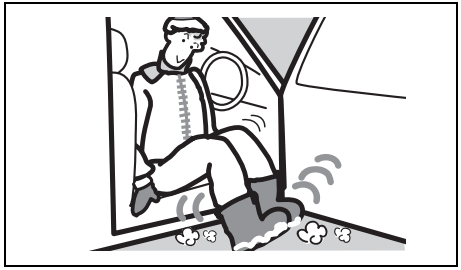

80J312

Remove snow attaching to shoes before getting in your vehicle. If you do not remove it, you may slip when operating the pedals and the window glasses may mist easily because of high humidity inside the vehicle.

When parking the vehicle outside

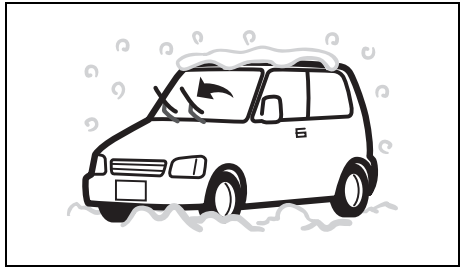

80J315

- For vehicle equipped with Dual Sensor Brake Support II (DSBS II), the Dual Sensor Brake Support II (DSBS II) may not operate properly when there is snow or frost on the windshield.

NOTICE

- **If you park the vehicle under eaves or trees, the roof of the vehicle may be dented by accumulated snow or fallen snow.**
  When it is snowing, do not park the vehicle under eaves or trees.
- **If you park the vehicle outside when it is snowing, the wiper arms may be deformed or the wiper blades may be frozen on the windshield by snow weight. Raise the wiper arms away from the windshield when parking the vehicle.**

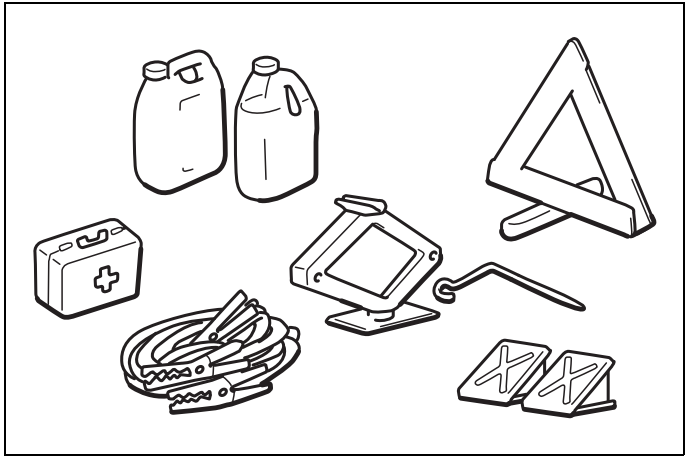

60G411

EMERGENCY SERVICE

Do not drive when the vehicle is damaged 7-1
Tyre changing tool 7-1
Jacking instructions 7-1
Running Out of Battery 7-5
Jump-starting instructions 7-6
Towing your vehicle (recreational towing) 7-7
Engine trouble: Starter does not operate 7-10
Engine trouble: Does not start 7-10
Engine trouble: Overheating 7-10

Do not drive when the vehicle is damaged

If your vehicle is damaged, even if the damage is minor, consult an authorized SUZUKI dealer or a qualified workshop before driving and have your vehicle inspected and repaired immediately. Depending on the damage, there may be a risk of vehicle fire or breakdown.

Tyre changing tool

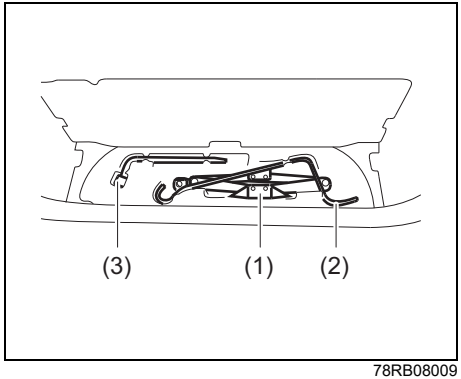

78RB08009

(1) Jack
(2) Jack handle
(3) Wheel wrench

The tyre changing tools are stowed in the luggage compartment.
Refer to “LUGGAGE COMPARTMENT” in “ILLUSTRATED TABLE OF CONTENTS” section.

Jacking instructions

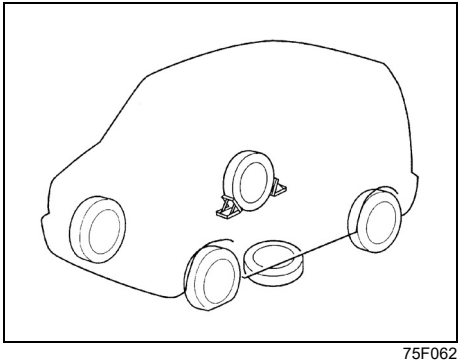

75F062

1) Place the vehicle on level, hard ground.
2) Set the parking brake firmly and shift into “P” (Park) if your vehicle has an automatic transmission, or shift into “R” (Reverse) if your vehicle has a manual transmission.

⚠ WARNING

- **Shift into "P" (Park) for an automatic transmission, or into "R" (Reverse) for a manual transmission vehicle when you jack up the vehicle.**
- **Never jack up the vehicle with the transmission in "N" (Neutral). Otherwise, unstable jack may cause an accident.**

3) Turn on the hazard warning switch if your vehicle is near traffic.
4) Block the front and rear of the wheel diagonally opposite of the wheel being lifted.
5) Place the spare wheel near the wheel being lifted as shown in the illustration in case that the jack is slipped.

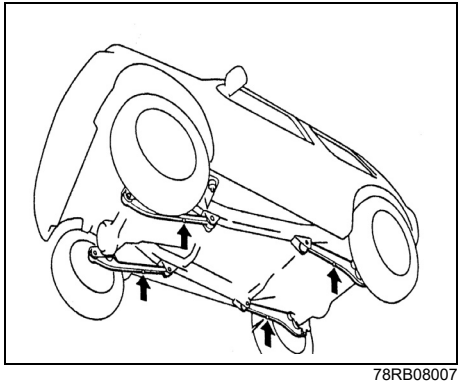

78RB08007

Front wheel/Rear wheel

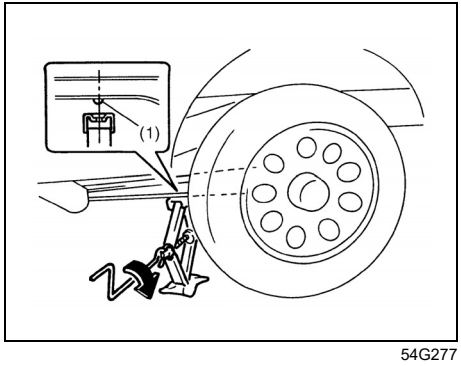

54G277

(1) Boss

6) Position the jack vertically and raise the jack by turning the jack handle clockwise until the jack head hole fits into the boss (1) of the body as the illustration.
7) Continue to raise the jack slowly and smoothly until the tyre clears the ground. Do not raise the vehicle more than necessary.

⚠ WARNING

- **Use the jack only to change wheels on level, hard ground.**
- **Never jack up the vehicle on an inclined surface.**
- **Never raise the vehicle with the jack in a location other than between the frame bosses near the wheel to be changed.**
- **Make sure that the jack is raised at least 51 mm (2 inches) before it contacts the boss. Use of the jack when it is within 51 mm (2 inches) of being fully collapsed may result in failure of the jack.**
- **No person should place any portion of their body under a vehicle that is supported by a jack.**
- **Never run the engine when the vehicle is supported by the jack and never allow passengers to remain in the vehicle.**

Raising vehicle with garage jack

- Apply the garage jack to one of the points indicated below.
- Always support the raised vehicle with jack stands (commercially available) at the points indicated below.

(1) Front
(2) Rear
(3) Jack stand
(4) Garage jack
(5) Jacking point for garage jack

⚠ WARNING

As the vehicle may get damaged or an accident may occur, observe the following points.

- **Observe the designated points shown in the illustration.**
- **When holding the lifted vehicle, use the jack stand.**
- **When jacking up the front side or the rear side only, put a chock (commercially available) on front and back of the grounded tyre.**

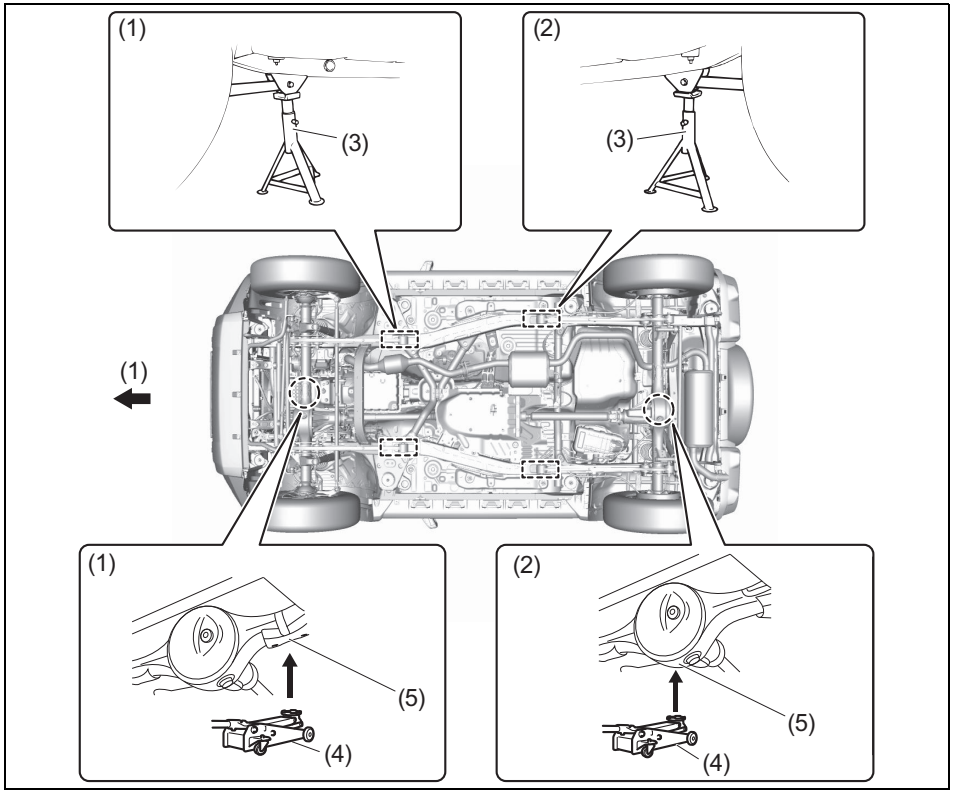

85U070010

The equipment and specifications shown in the above illustration may vary depending on the country or region.

NOTICE

Never apply a garage jack to the exhaust pipe, front fender splash guard, side sill splash, rear fender or splash guard.

NOTE:
For more details, contact an authorized SUZUKI dealer or a qualified workshop.

Changing wheels

To change a wheel, use the following procedure:
1) Prepare the jack, tools and spare tyre.
2) Loosen, but do not remove the wheel nuts.
3) Jack up the vehicle (follow the jacking instructions in this section).

⚠ WARNING

- **Shift into "P" (Park) for an automatic transmission, or into "R" (Reverse) for a manual transmission vehicle when you jack up the vehicle.**
- **Never jack up the vehicle with the transmission in "N" (Neutral). Otherwise, unstable jack may cause an accident.**

⚠ CAUTION

Immediately after the vehicle has been driven, the wheels, the wheel nuts and the area around the brakes might be extremely hot. Touching these areas may cause burn injury. Do not touch these areas, immediately after the vehicle has been driven.

4) Remove the wheel nuts and wheel.

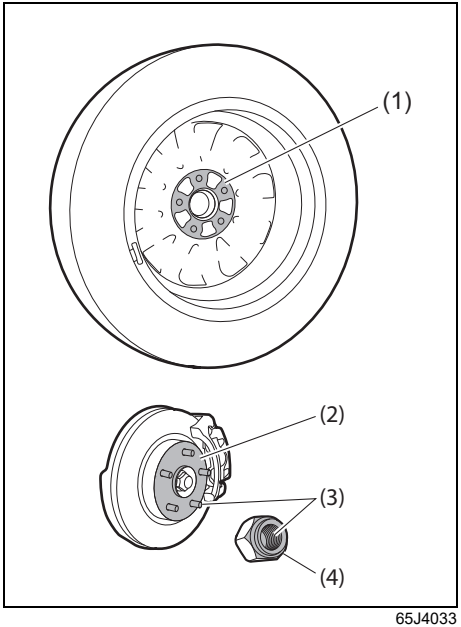

65J4033

5) Clean any mud or dirt off from the surface of the wheel (1), hub (2), thread part (3) and surface of the wheel nuts (4) with a clean cloth.
Clean the hub carefully; it may be hot from driving.

6) Install the new wheel and replace the wheel nuts with their cone shaped end facing the wheel. Tighten each nut snugly by hand until the wheel is securely seated on the hub.

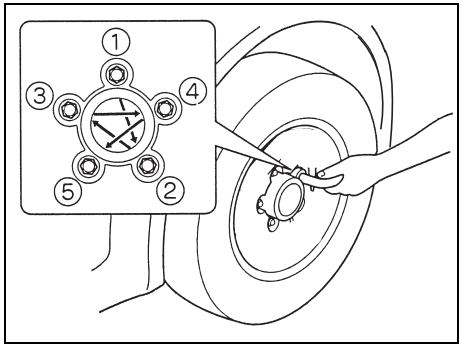

78RB08003

Tightening torque for wheel nut
100 Nm (10.0 kg-m, 73.8 lb-ft)

7) Lower the jack and fully tighten the nuts with a wheel wrench in numerical order as shown in the illustration.

⚠ WARNING

Use genuine wheel nuts and tighten them to the specified torque as soon as possible after changing wheels. Incorrect wheel nuts or improperly tightened wheel nuts may come loose or fall off, which can result in an accident. If you do not have a torque wrench, have the wheel nut torque checked by an authorized SUZUKI dealer or a qualified workshop.

Running Out of Battery

In the following cases, the lead-acid battery is running out.

- The starter does not engage when attempting to turn on the engine. Or, the starter rotation is too weak to make the engine start.
- The headlight illumination is extremely low or the horn volume is low.

Jump-starting instructions

⚠ WARNING

- **Never attempt to jump-start your vehicle if the lead-acid battery appears to be frozen. Batteries in this condition may explode.**
- **When making jump lead connections, check that your hands and the jump leads remain clear from pulleys, belts or fans.**
- **Lead-acid batteries produce flammable hydrogen gas. Keep flames and sparks away from the battery or an explosion may occur. Never smoke when working near the battery.**
- **If the booster battery you use for jump-starting is installed in another vehicle, check that the two vehicles are not touching each other.**
- **If your lead-acid battery discharges repeatedly, for no apparent reason, have your vehicle inspected by an authorized SUZUKI dealer or a qualified workshop.**
- **To avoid harm to yourself or damage to your vehicle or battery, follow the jump-starting instructions below.**
  If you are in doubt, call for qualified road service.

NOTICE

Your vehicle should not be started by pushing or towing. This starting method could result in permanent damage to the catalytic converter. Use jump leads to start a vehicle with a weak or flat battery.

1) Use only a 12-volt lead-acid battery to jump-start your vehicle. Position the good 12-volt lead-acid battery close to your vehicle so that the jump leads will reach both batteries. When using a battery installed on another vehicle, check that two vehicles do not touch each other. Set the parking brakes fully on both vehicles.
2) Turn off all vehicle accessories, except those necessary for safety reasons (for example, headlights or hazard lights).

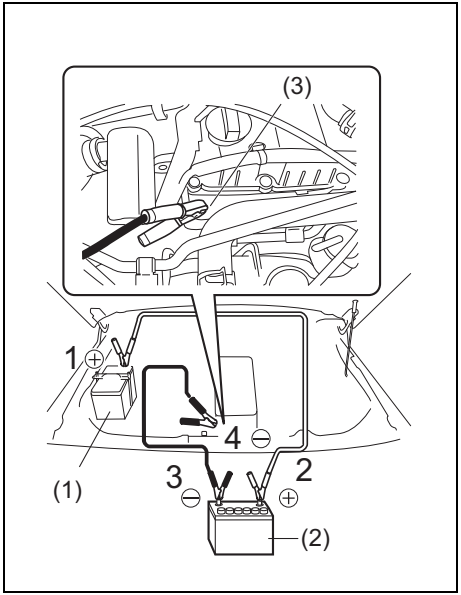

78RB08004

3) Connect jump leads as follows:
   1. Connect one end of the first jump lead to the positive (+) terminal of the discharged battery (1).
   2. Connect the other end to the positive (+) terminal of the booster battery (2).
   3. Connect one end of the second jump lead to the negative (–) terminal of the booster battery (2).

4. Make the final connection to an unpainted metal part (3) of engine cylinder head in the vehicle with the discharged battery (1).

⚠ WARNING

Never connect the jump lead directly to the negative (–) terminal of the discharged battery, or an explosion may occur.

4) If the booster battery you are using is fitted to another vehicle, start the engine of the vehicle with the booster battery. Run the engine at moderate speed.
5) Start the engine of the vehicle with the discharged battery.
6) Remove the jump leads in the exact reverse order in which you connected them.

Towing your vehicle (recreational towing)

If you need to have your vehicle towed, contact a professional service. An authorized SUZUKI dealer or a qualified workshop can provide you with detailed towing instructions.

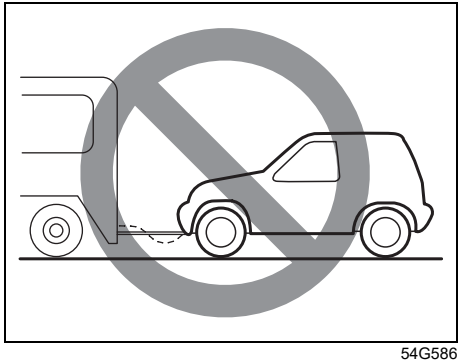

54G586

⚠ WARNING

When you tow your vehicle, follow the instructions below to avoid accidents and damage to your vehicle. In addition, be sure to observe government and local requirements regarding vehicle lighting and trailer hitches or tow bars.

⚠ WARNING

A safety chain should always be used when you tow your vehicle.

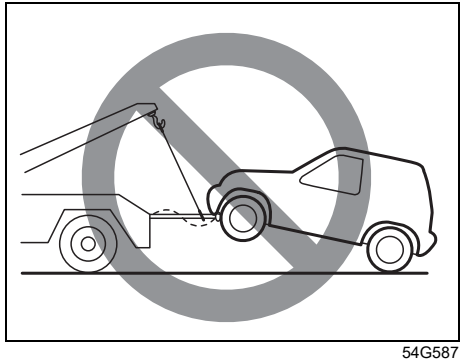

54G587

NOTICE

Do not tow your vehicle with the rear wheels directly on the ground (and the transmission in neutral). If you do, the transmission will be damaged fatally.

⚠ WARNING

For vehicles equipped with the Dual Sensor Brake Support II (DSBS II), if your vehicle is towed with the engine on, press Dual Sensor Brake Support II (DSBS II) OFF switch and turn off the Dual Sensor Brake Support II (DSBS II). If not, accidents related to the system being turned on may occur.

NOTICE

Observe the following instructions when towing your vehicle.

- **To help avoid damage to your vehicle during towing, proper equipment and towing procedures must be used.**
- **Using the frame hook, tow your vehicle on paved roads for short distances at low speed.**

Before towing

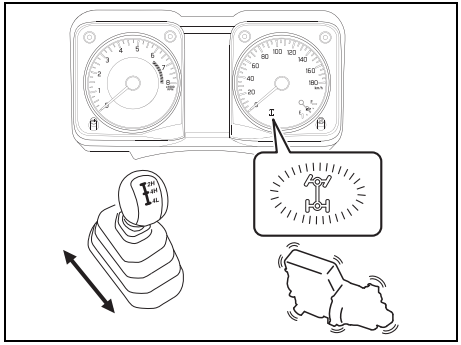

85U070020

If you tow your vehicle with the front wheels on the ground, shift the transmission into Neutral and make sure the 4WD indicator on the instrument cluster comes on when you use the transfer lever to shift into 4-wheel drive high range position (“4H”) and goes off when you use the transfer lever to shift into 2-wheel high drive position (“2H”) with the engine running. If the 4WD indicator does not come on or it does not go off, that means, the air-locking hubs cannot be locked or unlocked, the vehicle must be towed with the front wheels lifted and the rear wheels on a dolly.

Towing a Disabled Vehicle

If your vehicle is disabled, and if the steering and drive train are in good condition (and the engine can be started for 4WD vehicles), the vehicle can be towed according to the instructions in this section. Your vehicle may also be towed by a tow truck with the front or rear wheels lifted, according to the instructions below.

Front wheels lifted (all models)

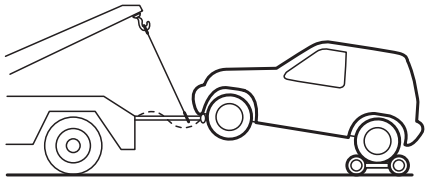

54G279

Front wheels lifted

Your vehicle may be towed by a tow truck with the front wheels lifted and a dolly under the rear wheels.

Rear wheels lifted (all models)

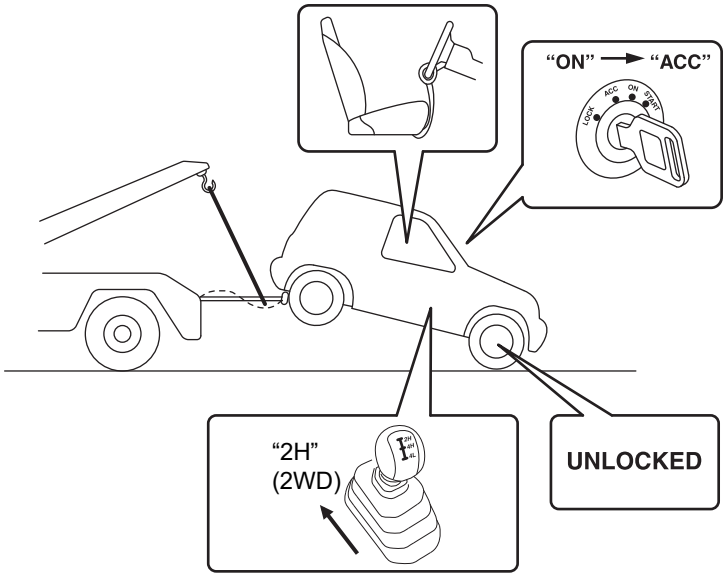

78RB08006

Rear wheels lifted

Your vehicle may be towed by a tow truck with the rear wheels lifted and the front wheels on the ground. Towing speed should not exceed 90 km/h (55 mph).

For this type of towing:

1) Shift the manual transmission to Neutral or the automatic transmission to "P" position and start the engine.
2) Shift the transfer lever to 2WD position ("2H").
3) Make sure the 4WD indicator on the instrument cluster is turned off.

NOTICE
If the air-locking hubs cannot be unlocked, tow the vehicle with the rear wheels lifted and a dolly under the front wheels.

4) Turn the ignition key to the "ACC" position or press the engine switch to change the ignition mode to ACC to stop the engine and to unlock the steering wheel.

NOTICE
The steering column lock is not strong enough to withstand shocks transmitted from the front wheels during towing.

5) Make sure the front wheels are facing straight forward and secure the steering wheel with a steering wheel clamping device designed for towing service.

Engine trouble: Starter does not operate

1) Try turning the ignition switch to "START" position or try pressing the engine switch to change the ignition mode to START with the headlights turned on to determine the lead-acid battery condition. If the headlights go excessively dim or go off, it usually means that either the lead-acid battery is discharged or the battery terminal contact is poor. Recharge the lead-acid battery or correct battery terminal contact as necessary.
2) If the headlights remain bright, check the fuses. If the reason for failure of the starter is not obvious, there may be a major electrical problem. Have the vehicle inspected by an authorized SUZUKI dealer or a qualified workshop.

Engine trouble: Does not start

Make sure that your vehicle has enough fuel and battery.
If the engine does not start under very cold condition, press the accelerator pedal all the way to the floor and hold it while cranking the engine.
Refer to "Starting / Stopping engine (Vehicle without keyless push start system)" or "Starting / stopping engine (Vehicle with keyless push start system)" in "OPERATING YOUR VEHICLE" section.
If the engine still does not start have your vehicle inspected at an authorized SUZUKI dealer or a qualified workshop.

- Do not operate the starter motor for more than 12 seconds.

(Vehicle with keyless push start system)
NOTE:
If the engine refuses to start, the starter motor automatically stops after a certain period of time. After the starter motor has automatically stopped or if there is anything abnormal in the engine starting system, the starter motor runs only while the engine switch is held pressed.

Engine trouble: Overheating

The engine could overheat temporarily under severe driving conditions. If the high engine coolant temperature warning light comes on as overheating or the engine coolant temperature gauge indicates overheating during driving:

1) Turn off the air conditioner.
2) Take the vehicle to a safe place and park.
3) Run the engine at a normal idle speed for a few minutes until the high engine coolant temperature warning light goes off.

⚠ WARNING

If you see or hear escaping steam, stop the vehicle in a safe place and immediately turn off the engine to cool it. Do not open the hood when steam is present. When the steam can no longer be seen or heard, open the hood to see if the coolant is still boiling. If it is, you must wait until it stops boiling before you proceed.

If the high engine coolant temperature warning light does not go off or the temperature indication does not come down to within the normal, acceptable range:

1) Turn off the engine and check that the water pump belt and pulleys are not damaged or slipping. If any abnormality is found, correct it.
2) Check the coolant level in the reservoir. If it is found to be lower than "LOW" line, check radiator, water pump, radiator hoses and heater hoses for leakage. If leakage that may cause overheating is found, do not run the engine until these problems have been corrected.
3) If leakage is not found, carefully add coolant to the reservoir and then the radiator, if necessary. (Refer to "Engine coolant" in "INSPECTION AND MAINTENANCE" section.)

NOTE:
If engine overheats and you are not sure what to do, contact an authorized SUZUKI dealer or a qualified workshop.

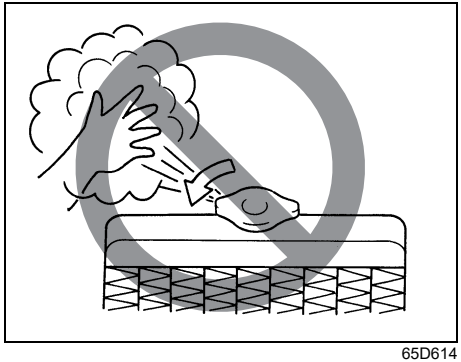

65D614

⚠ WARNING

- **It is hazardous to remove the radiator cap when the water temperature is high, because scalding fluid and steam may be blown out under pressure. The cap should only be taken off when the coolant temperature has lowered.**
- **To help prevent personal injury, keep hands, tools and clothing away from the engine cooling fan and air-conditioner fan. These electric fans can automatically turn on without warning.**

APPEARANCE CARE

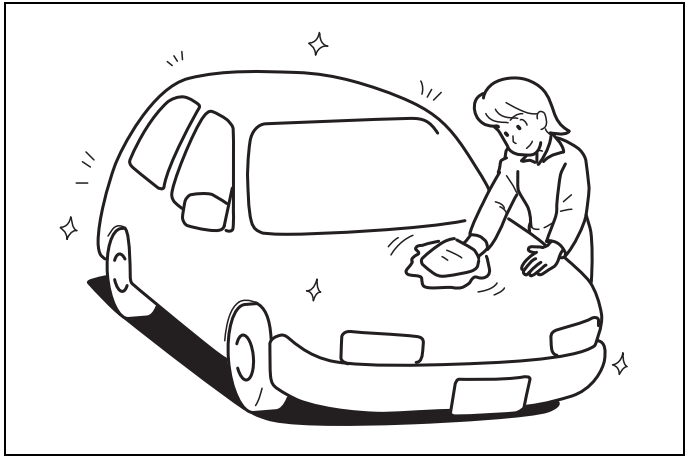

60G412

Corrosion prevention 8-1
Vehicle cleaning 8-2

Corrosion prevention

It is important to take good care of your vehicle to protect it from corrosion. Listed below are instructions for how to maintain your vehicle to prevent corrosion. Please read and follow these instructions carefully.

Important information about corrosion

Common causes of corrosion

1) Accumulation of road salt, dirt, moisture or chemicals in hard-to-reach areas of the vehicle underbody or frame.
2) Chipping, scratches and any damage to treated or painted metal surfaces resulting from minor accidents or abrasion by stones and gravel.

Environmental conditions which accelerate corrosion

1) Road salt, dust control chemicals, sea breeze or industrial pollution will all accelerate the corrosion of metal.
2) High humidity will increase the rate of corrosion particularly when the temperature range is just above the freezing point.
3) Moisture in certain areas of a vehicle for an extended period of time may promote corrosion even though other body sections may be completely dry.
4) High temperatures will cause an accelerated rate of corrosion to parts of the vehicle which are not well-ventilated to permit quick drying.

This information illustrates the necessity of keeping your vehicle (particularly the underbody) as clean and dry as possible. It is equally important to repair any damage to the paint or protective coatings as soon as possible.

How to help prevent corrosion

Wash your vehicle frequently

The best way to preserve the finish on your vehicle and to help avoid corrosion is to keep it clean with frequent washing.
Wash your vehicle at least once during the winter and once immediately after the winter. Keep your vehicle, particularly the underside, as clean and dry as possible.
If you frequently drive on salted roads, your vehicle should be washed at least once a month during the winter. If you live near the ocean, your vehicle should be washed at least once a month throughout the year.

For washing instructions, refer to “Vehicle cleaning” section.

Remove foreign material deposits

Foreign materials such as salts, chemicals, road oil or tar, tree sap, bird droppings and industrial fall-out may damage the finish of your vehicle if it is left on painted surfaces. Remove these types of deposits as quickly as possible. If these deposits are difficult to wash off, an additional cleaner may be required. Check that any cleaner you use is not harmful to painted surfaces and is specifically intended for your purposes. Follow the manufacturer’s directions when using these special cleaners.

Repair finish damage

Carefully examine your vehicle for damage to the painted surfaces. Should you find any chips or scratches in the paint, touch them up immediately to prevent corrosion from starting. If the chips or scratches have gone through to the bare metal, have a qualified body shop make the repair.

Keep passenger and luggage compartments clean

Moisture, dirt or mud can accumulate under the floor mats and may cause corrosion. Occasionally, check under these mats to ensure that this area is clean and dry. More frequent checks are necessary if the vehicle is used for off-road driving or in wet weather.
Certain cargos such as chemicals, fertilizers, cleaners, salts, etc. are extremely corrosive by nature. These products should be transported in sealed containers. If they

are spilled or leaked, clean and dry the area immediately.

Park your vehicle in a dry, well-ventilated area
Do not park your vehicle in a damp, poorly-ventilated area. If you often wash your vehicle in the garage and place it there in wet condition, your garage may be damp. The high humidity in the garage may cause or accelerate corrosion. A wet vehicle may corrode even in a heated garage if the ventilation is poor.

Use mud and gravel shields
The use of mud and gravel shields will help protect your vehicle, especially if you frequently drive on gravel or salted roads.
Full-size shields, which extend as close to the road as is practical, are the best. The fittings for such shields should also be corrosion resistant. Please check with an authorized SUZUKI dealer or a qualified workshop for information on these shields.

⚠ WARNING

Do not apply additional undercoating or rust preventive coating on or around exhaust system components such as the catalytic converter and exhaust pipes. A fire could be started if the undercoating substance becomes overheated.

Vehicle cleaning

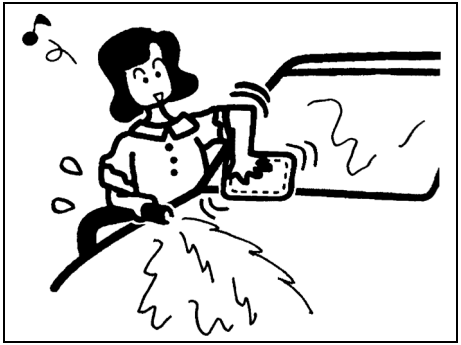

76G044S

⚠ WARNING

When cleaning the interior or exterior of the vehicle, do not use flammable solvents such as lacquer thinners, gasoline and benzine. Also, do not use cleaning materials such as bleaches and strong household detergents. The materials could cause personal injury or damage to the vehicle.

Cleaning interior

- Clean out any dirt, sand, etc. using a vacuum cleaner, or wipe off the surfaces using a soft cloth moistened with cold or lukewarm water. If the interior is left dirty, scratches can occur.
- Quickly clean off any liquids such as those from air fresheners or spilled beverages by using tissue paper or a soft cloth. Leaving spilled liquids can cause staining, discoloration or cracking.

⚠ WARNING

- **Do not spray the interior with water or other liquids. If the navigation equipment, audio components, switches, wiring under the floor, or other electrical parts become wet, there is a risk of fire or malfunction, and the SRS airbag system could fail to function normally.**
- **If you pour water or spill a drink in the vehicle, consult an authorized Suzuki dealer or a qualified workshop as soon as possible for inspection.**

NOTICE

- **Do not use chemical products containing the following ingredients. Doing so may cause staining, discoloration, deformation, or a deterioration in strength, etc.**
  - **– Solvents such as benzine, gasoline, thinner, or sticker peeling agents**
  - **– Acidic or alkaline detergents**
  - **– Bleaches or dyes**
- **Do not use chemical products that include silicone for cleaning the areas around the air conditioner, electronic equipment such as the audio or switches. Contact with silicone may cause them to malfunction.**
- **Do not leave colored leather goods, furs, vinyl articles, etc. in your vehicle for long periods. Doing so could cause discoloration or deformation of the interior.**

NOTE:
To prevent liquid-based air fresheners from spilling, it is recommended to fix their containers in place, or use solid-type air fresheners instead.

Vinyl upholstery
Prepare a solution of soap or mild detergent dissolved in warm water. Apply the solution to the vinyl with a sponge or soft cloth and let it soak for a few minutes to loosen dirt.
Rub the surface with a clean, damp cloth to remove dirt and the soap solution. If some dirt still remains on the surface, repeat this procedure.

Fabric upholstery
Remove loose dirt with a vacuum cleaner. Using a mild soap solution, rub stained areas with a clean damp cloth. To remove soap, rub the areas again with a cloth dampened with water. Repeat this until the stain is removed, or use a commercial fabric cleaner for tougher stains. If you use a fabric cleaner, carefully follow the manufacturer's instructions and precautions.

Leather upholstery
Remove loose dirt with a vacuum cleaner. Using a mild soap or saddle soap solution, wipe dirt off with a clean damp soft cloth. To remove soap, wipe the areas again with a soft cloth dampened with water. Wipe the areas dry with a soft dry cloth. Repeat this until the dirt or stain is removed, or use a commercial leather cleaner for tougher dirt or stains. If you use a leather cleaner, carefully follow the manufacturer's instructions and precautions. Do not use solvent type cleaners or abrasive cleaners.

NOTE:
- *In order to keep leather upholstery looking good, it should be cleaned at least twice a year.*
- *If leather upholstery becomes wet, immediately wipe it dry with tissue paper or a soft cloth. Water may cause leather to harden and shrink if it is not wiped off.*
- *When parking on sunny days, select a shady place or use a sunshade. If leather upholstery is exposed to direct sunlight for a long time, it may discolor and shrink.*
- *As is common with natural materials, leather is inherently irregular in grain and cowhide has spots in its natural state. These do not affect the performance of the leather in any way.*

Seat belts
Clean seat belts with a mild soap and water. Do not use bleach or dye on the belts. They may weaken the fabric in the belts.

Vinyl floor mats
Ordinary dirt can be removed from vinyl with water or mild soap. Use a brush to help loosen dirt. After the dirt is loosened, rinse the mat thoroughly with water and dry it in the shade.

Carpets
Remove dirt and soil as much as possible with a vacuum cleaner. Using a mild soap solution, rub stained areas with a clean damp cloth. To remove soap, rub the areas again with a cloth dampened with water. Repeat this until the stain is removed, or use a commercial carpet cleaner for tougher stains. If you use a carpet cleaner, carefully follow the manufacturer's instructions and precautions.

Instrument panel and console
Remove loose dirt with a vacuum cleaner. Gently wipe dirt off with a tightly squeezed damp clean cloth. Repeat this until the dirt is removed.

NOTICE

- **Do not use chemical products that contain silicon to wipe electrical components such as the air conditioning system, audio, or other switches. These will cause damage to the components.**
- **Liquid such as liquid aromatics, soft drinks or juice may cause discoloration, wrinkles, and cracking to resin-based parts and textiles. Immediately wipe it dry with tissue paper or a soft cloth.**
- **Do not leave leather products with color, fur or vinyl products, etc. in your vehicle for long periods. It may cause discoloration or deterioration of interior.**

Cleaning exterior

NOTICE

- **It is important that your vehicle be kept clean and free from dirt. Failure to keep your vehicle clean may result in fading of the paint or corrosion to various parts of the vehicle body.**
- **Using an inappropriate material for repair could cause damage to the paint.**
  When repairing scratches on painted surfaces, consult an authorized SUZUKI dealer or a qualified workshop.

Caring for aluminum wheels

NOTE:

- *Do not use an acidic or alkaline detergent, or a cleaner containing petroleum solvent to wash aluminum wheels. These types of cleaner will cause permanent spots, discoloration and cracks on finished surfaces and damage to center caps.*
- *Do not use a bristle brush and soap containing an abrasive material. These will damage finished surfaces.*

Washing

⚠ WARNING

- **Never attempt to wash and wax your vehicle with the engine running.**
- **When cleaning the underside of the body and fender, where there may be sharp-edged parts, wear gloves and a long-sleeved shirt to protect your hands and arms from being cut.**
- **After washing your vehicle, carefully test the brakes before driving to check that they have maintained their normal effectiveness.**

NOTICE



84S09240

- **When washing or waxing the vehicle, do not lean on the vehicle body or do not push it hard.**
  This might cause it to deform.

Washing by hand

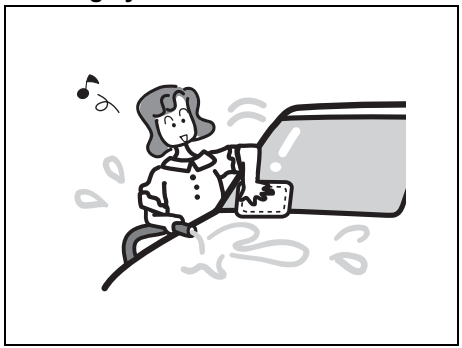

80J303

When washing the vehicle, park it in the place where direct sunlight does not fall on it as much as possible and follow the instructions below:

1) Flush the underside of body and wheel housings with pressurized water to remove mud and debris. Use plenty of water.

NOTICE

When washing the vehicle:
- **Avoid directing steam or hot water of more than 80°C (176°F) on plastic parts.**
- **To avoid damaging engine components, do not use pressurized water in the engine compartment.**

2) Rinse the body to loosen the dirt. Remove dirt and mud from the body exterior with running water. You may use a soft sponge or brush. Do not use hard materials which can scratch the paint or plastic. Remember that the headlight covers or lenses are made of plastic in many cases.

NOTICE

To avoid damage to the paint or plastic surface, do not wipe the dirt off without ample water. Follow the above procedure.

3) Wash the entire exterior with a mild detergent or car wash soap using a sponge or soft cloth. The sponge or cloth should be frequently soaked in the soap solution.

NOTICE

When using a commercial car wash product, observe the cautions specified by the manufacturer. Never use strong household detergents or soaps.

4) Once the dirt has been completely removed, rinse off the detergent with running water.
5) Wipe off the vehicle body with a wet chamois or cloth and allow it to dry in the shade.
6) Check carefully for damage to painted surfaces. If there is any damage, touch up the damage following the procedure below:
   1. Clean all damaged spots and allow them to dry.
   2. Stir the paint and touch up the damaged spots lightly using a small brush.
   3. Allow the paint to dry completely.

Washing by an automatic car wash

NOTICE

- **When washing the vehicle with a car wash machine (conveyor belt type, etc.) without shifting to the P position or stopping the vehicle, operate the dual sensor brake support II OFF switch to stop the low speed brake support at a low speed (backward).**
  Otherwise, the low speed brake support at a low speed (backward) may unexpectedly activate, resulting in an accident.
- **If you use an automatic car wash, check that your vehicle's body parts, such as antenna and spare wheel, cannot be damaged. If you are in doubt, consult the car wash operator for advice.**

Washing by a high-pressure cleaner

NOTICE

If you use a high-pressure cleaner, keep away the nozzle from your vehicle sufficiently.

- **Bringing the nozzle to your vehicle too close or pointing the nozzle to the opening of front grill or bumper etc. can cause damage and malfunction of the vehicle body and parts.**
- **Pointing the nozzle to door glasses and door frames can allow water to enter the cabin.**

Caring for cameras

Wash the lens part of camera and wipe it off with a soft cloth. If the lens part is very dirty, use a mild detergent.

NOTICE

- **Using alcohol, benzine, thinner etc. to wipe the camera may cause discoloration.**
  When you wipe the camera, do not use alcohol, benzine, thinner etc.
- **Hard coating is used for the lens of camera not to be easily scratched. However, if you use the brush for a vehicle, it may be difficult for you to see the image on the rearview camera.**
  Be very careful not to scratch the lens.

Waxing

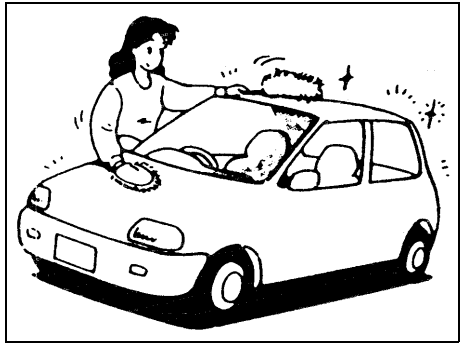

60B211S

After washing the vehicle, waxing and polishing are recommended to further protect and beautify the paint.

- Only use waxes and polishes of good quality.
- When using waxes and polishes, observe the precautions specified by the manufacturers.

NOTE:
Do not use wax on plastic parts that are not coated. Waxing these surfaces could result in a whitened or uneven appearance.

SPECIFICATION

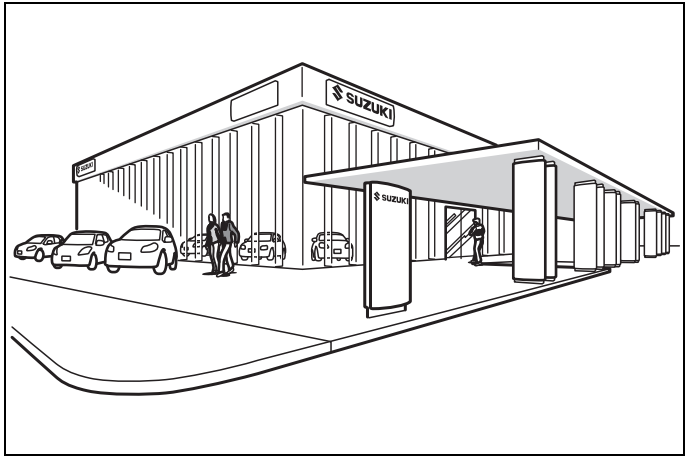

84MM01001

Vehicle identification 9-1
Fuel recommendation 9-2
Specifications 9-4

Vehicle identification

Chassis serial number

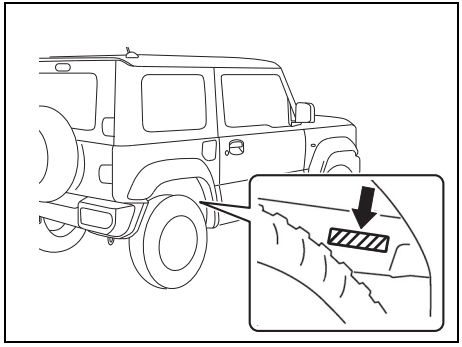

78RB10001

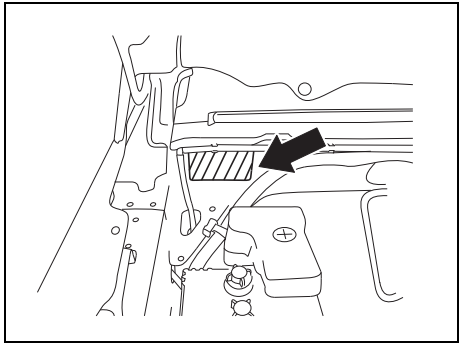

78RB10002

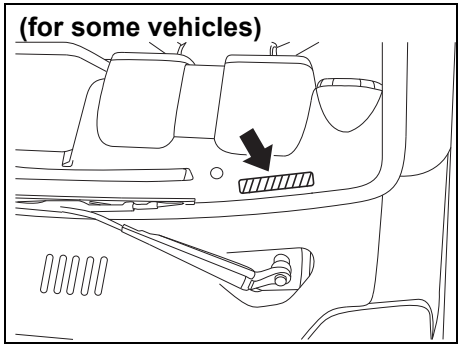

78RB10003

The chassis and/or engine serial numbers are used to register the vehicle. They are also used to assist an authorized SUZUKI dealer or a qualified workshop when ordering or referring to special service information. Whenever you have occasion to consult an authorized SUZUKI dealer or a qualified workshop, remember to identify your vehicle with this number. Should you find the number difficult to read, you will also find it on the identification plate.

(For Arabic identification plate)
The year of the manufacture and country of origin are shown on the identification plate in the engine room.

Engine serial number

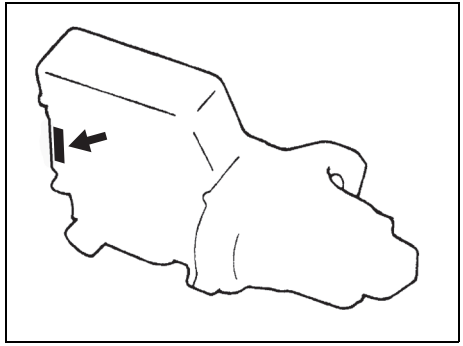

78RB10004

The engine serial number is stamped on the cylinder block as shown in the illustration.

Fuel recommendation

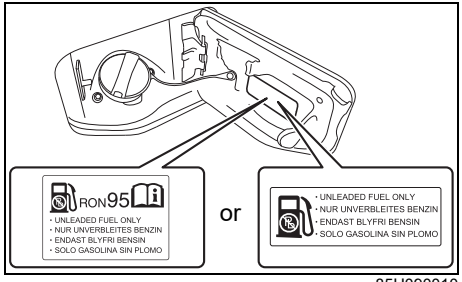

85U090010

To avoid damaging catalytic converter, you **must** use unleaded gasoline with an octane number (RON) of 91 or higher (or 95 or higher if a “RON 95” label is attached on the fuel filler lid). Do not use gasoline with additives containing metal. This is identified by a label attached on fuel lid that states: “UNLEADED FUEL ONLY”, “NUR UNVERBLEITES BENZIN”, “ENDAST BLYFRI BENSIN” or “SOLO GASOLINA SIN PLOMO”.

Gasoline-ethanol blends

Blends of unleaded gasoline and ethanol (grain alcohol), also known as gasohol, are commercially available in certain areas. Blends of this type may be used in your vehicle if they are no more than 10% ethanol. Check that this gasoline-ethanol blend has octane ratings no lower than those recommended for the gasoline.

NOTE:
If you are not satisfied with the driveability or fuel economy of your vehicle when you use a gasoline-alcohol blend, you should switch back to unleaded gasoline containing no alcohol.

Gasoline containing MTBE (where legally available)

Unleaded gasoline containing MTBE (methyl tertiary butyl ether) may be used in your vehicle if the MTBE content is not greater than 15%. This oxygenated fuel does not contain alcohol.

NOTICE

The fuel tank has an air space to allow for fuel expansion in hot weather. If you continue to add fuel after the filler nozzle has automatically shut off or an initial blowback occurs, the air chamber will become full. Exposure to heat when fully fuelled in this manner will result in leakage due to fuel expansion. To prevent such fuel leakage, stop filling after the filler nozzle has automatically shut off, or when initial vent blowback occurs, if using an alternative non-automatic system.

NOTICE

Be careful not to spill fuel containing alcohol while refueling. If fuel is spilled on the vehicle body, wipe it up immediately. Fuels containing alcohol can cause paint damage, which is not covered under the New Vehicle Limited Warranty.

NOTE:

- *For the fuel recommendation of Mexico models, refer to "For Mexico" in the "SUPPLEMENT" section.*
- *For the fuel recommendation of Bolivia and Peru models, refer to "For Bolivia and Peru" in the "SUPPLEMENT" section.*
- *For the fuel recommendation of Thailand models, refer to "For Thailand" in the "SUPPLEMENT" section.*
- *For the fuel recommendation of Ukraine models, refer to "For Ukraine" in the "SUPPLEMENT" section.*

Specifications

NOTE:
Specifications are subject to change without notice.

M/T: Manual transmission A/T: Automatic transmission

ITEM: Dimensions		**UNIT: mm (in.)**
Overall length		3630 (142.9) (Front bumper to spare tyre) 3650 (143.7) (Front bumper to spare wheel half cover)
Overall width		1645 (64.8)
Overall height		1720 (67.7)
Wheelbase		2250 (88.6)
Track	Front	1395 (54.9)
	Rear	1405 (55.3)
Ground clearance		210 (8.3)

ITEM: Mass (weight)	UNIT: kg (lbs)	
Curb mass (weight)	M/T	1095 – 1110 (2414- 2447)
	A/T	1105 – 1125 (2436 - 2480)
Gross vehicle mass (weight) rating		1450 (3197)
Permissible maximum Axle Weight	Front	695 (1532)
	Rear	880 (1940)

ITEM: Engine	
Type	K15B
Number of cylinders	4
Bore	74.0 mm (2.91 in.)
Stroke	85.0 mm (3.35in.)
Displacement	1462 cm^3 (1462 cc, 89.2 cu.in)
Compression ratio	10.0 : 1

ITEM: Electrical		
Standard spark plug		DENSO ZXU20PR11, NGK KR6A-10
Battery	with idling stop system	12V ISS N-55 20HR 36AH CCA 480A(JIS)
	without idling stop system	12V 55B24L 20HR 45AH CCA 370A(JIS)
Fuses		See “INSPECTION AND MAINTENANCE” section.

*1:Your vehicle is equipped with a lead-acid battery for exclusive use of the idling stop system.
When replacing the lead-acid battery, make sure to select the specified type for idling stop system. Consult an authorized SUZUKI dealer or a qualified workshop for replacing the lead-acid battery.

ITEM: Lights		WATTAGE	BULB No.
Headlight	Halogen	12V 60/55W	H4
	LED	LED*1	–
Front fog light	Without daytime running light	12V 19W	H16
	With daytime running light	12V 35W	H8
Position light (if equipped)		12V 5W	W5W
		LED*1	–
Daytime running light (if equipped)		12V 13W	P13W
Turn signal light	Front	12V 21W	W21W
	Rear	12V 21W	WY21W
Side turn signal light		12V 5W	–
Tail/brake light		12V 21/5W	W21/5W
High mount stop light		LED*1	–
Reversing light		12V 21W	W21W
License plate light		12V 5W	W5W
		LED*1	–
Rear fog light		12V 21W	W21W
Interior light	Front	12V 10W	–
	Luggage compartment (if equipped)	12V 8W	–

• If you need to replace the following bulbs indicated in the above table, consult an authorized SUZUKI dealer or a qualified workshop.
*1 Since the lights are non-disassemble type, you cannot replace a bulb. Replace the target assembly if any light is defective.

ITEM: Wheels and tyres		
Tyre size, front and rear	195/80R15 96S*1	
Rim size	with steel wheels	15X5 1/2JJ
	with aluminum wheels	15X5 1/2J
Tyre pressures	For the specified tyre pressure, see the tyre information label located on the driver's door lock pillar.	
Recommended snow tyre	195/80R15*2	

*1 If you cannot prepare tyres with the specified load index rate and speed symbol, prepare tyres with higher load index rate and speed symbol.
*2 If you prepare snow tyres;
- Check that they are tyres of the same size, structure and load capacity as the originally installed tyres.
- Mount the snow tyres on all four wheels.
- Understand that the maximum permissible speed of snow tyres is generally less than the originally installed tyres.

Consult an authorized SUZUKI dealer or a qualified workshop or supplier for further information.

The capacities listed below are approximate guide. The actual amount when replacing may differ.

ITEM: Recommended fuel / lubricants			Capacity
Fuel		See “FUEL RECOMMENDATION” section.	40 L (8.8 Imp gal)
Engine oil		Classification: API SN, SP ILSAC GF-6 Viscosity: SAE 0W-16	3.6 L (6.3 Imp pt) (replacement with oil filter)
Engine coolant	Left hand drive vehicle	“SUZUKI LLC: Super (Blue) Coolant”	4.9 L (8.7 Imp pt) (including reservoir tan
	Right hand drive vehicle		4.8 L (8.5 Imp pt) (including reservoir tank)
Manual transmission oil		“SUZUKI GEAR OIL 75W”	1.2 L (2.1 Imp pt)
Automatic transmission oil		“SUZUKI ATF 3317 or Mobil ATF3309”	5.7 L (10.0 Imp pt)
Differential oil	Front	“SUZUKI SUPER GEAR OIL 75W-85 SYNTHETIC”	1.6 L (2.8 Imp pt)
	Rear		1.3 L (2.3 Imp pt)
Transfer oil		“SUZUKI GEAR OIL 75W”	1.21 L (2.1 Imp pt)
Windshield washer fluid		–	4.0 L (0.9 Imp gal)

MEMO

SUPPLEMENT

For Thailand 10-1

For Thailand

Fuel

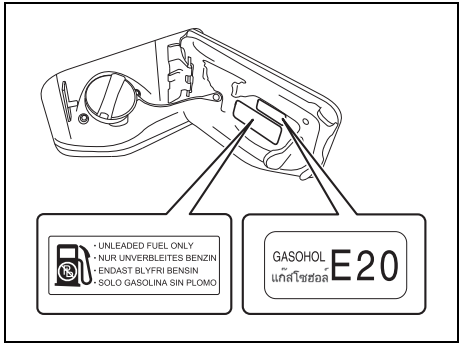

78RB21004

To avoid damaging catalytic converter, you must use unleaded gasoline with an octane number (RON) of 90 or higher.
This is identified by a label attached on fuel lid that states: “UNLEADED FUEL ONLY”, “NUR UNVERBLEITES BENZIN”, “ENDAST BLYFRI BENSIN” or “SOLO GASOLINA SIN PLOMO”.

Gasoline/Ethanol blends
Blends of unleaded gasoline and ethanol (grain alcohol), also known as gasohol, are commercially available in certain areas. Blends of this type may be used in your vehicle if they are no more than 20% ethanol.
Make sure this gasoline-ethanol blend has octane ratings no lower than those recommended for the gasoline.

NOTE:
If you are not satisfied with the driveability or fuel economy of your vehicle when you use a gasoline/alcohol blend, you should switch back to unleaded gasoline containing no alcohol.

Gasoline containing MTBE
Unleaded gasoline containing MTBE (methyl tertiary butyl ether) may be used in your vehicle if the MTBE content is not greater than 15%. This oxygenated fuel does not contain alcohol.

NOTICE

The fuel tank has an air space to allow for fuel expansion in hot weather. If you continue to add fuel after the filler nozzle has automatically shut off or an initial blowback occurs, the air chamber will become full. Exposure to heat when fully fuelled in this manner will result in leakage due to fuel expansion. To prevent such fuel leakage, stop filling after the filler nozzle has automatically shut off, or when initial vent blowback occurs, if using an alternative non-automatic system.

NOTICE

Be careful not to spill fuel containing alcohol while refueling. If fuel is spilled on the vehicle body, wipe it up immediately. Fuels containing alcohol can cause paint damage, which is not covered under the New Vehicle Limited Warranty.

INDEX

Symbols

"R" (reverse gear) indicator light 2-84

A

Accelerator pedal 3-10
Accessory socket 5-9
Adaptive cruise control 3-84, 3-94
Adaptive cruise control (with following function for all speeds) 3-98
Adding coolant 6-28
Adjusting headlight pattern 2-89
Air cleaner 6-29
Air conditioning system 6-63
Air conditioning system settings by idling stop system 2-47
Airbag warning light 2-73
Anti-lock brake system (ABS) 3-131, 3-133
Anti-lock brake system (ABS) warning light 2-70
Assist grips 5-10
Automatic heating and air conditioning system (climate control) 5-25
Automatic transmission (AT) 3-30
Automatic Transmission (AT) fluid 6-31

B

Battery 6-43, 6-65
Battery replacement 2-7, 2-13
Brake assist system 3-130
Brake fluid 6-35
Brake pedal 3-9, 6-36
Brake system warning light 2-69
Brakes 6-35
Braking 3-130
Brightness control 2-28
Built date 10-12
Bulb replacement 6-50

C

Catalytic converter 4-11
Central door locking system 2-3
Changing engine oil and filter 6-25
Changing wheels 7-4
Characteristics of the Vehicle with Automatic Transmission (AT) 3-36
Charge warning light 2-72
Chassis serial number 9-1
Child restraint 10-12
Child restraint system for countries applied for UN Regulation No.16 1-21
Child restraint systems 1-20
Child restraint systems suitability for each seat position (for the passenger vehicle without airbag deactivation switch) 1-21
Clock 2-31
Clutch fluid 6-34
Clutch Pedal 6-34

Clutch pedal 3-9, 6-34
Coolant level check 6-28
Coolant replacement 6-29
Corrosion prevention 8-1
Cup holder 5-13
Cup holder and storage area 5-12
D
Daily inspection checklist 3-1
Daytime running light 6-54
Daytime running light (D.R.L.) system 2-87
Door locks 2-2
Drive belt 6-23
Driver's seat belt reminder light / Front passenger's seat belt reminder light 2-72
Driving on hills 4-13
Dual Sensor Brake Support II (DSBS II) 3-60
Dual Sensor Brake Support II (DSBS II) OFF indicator light 2-80
Dual Sensor Brake Support II (DSBS II) OFF switch 3-70
E
eCall warning message 10-8
Electric power steering warning light 2-74
Electronic Stability Program (ESP®) 3-132
Emergency locking retractor (ELR) 1-10
Emergency Stop Signal (ESS) 3-129
Engine coolant 6-27
Engine coolant temperature light 2-76
Engine hood 5-4
Engine oil and filter 6-23
Engine oil consumption 3-2
Engine oil pressure warning light 2-71
Engine serial number 9-1
Engine switch 3-5
Engine switch illumination 3-11
Engine trouble: Does not start 7-10
Engine trouble: Overheating 7-10
Engine trouble: Starter does not operate 7-10
ESP® OFF indicator light 2-71, 3-134
ESP® OFF switch 3-135
ESP® warning light 2-70, 3-134
Exhaust gas warning 1-43
F
Floor mats 1-1
Fluid level check 6-31
Folding rear seats 1-6
Footrest 5-15
For Australia 10-12
For Bolivia and Peru 10-11
For GCC countries 10-1
For Indonesia 10-21
For Mexico 10-10
For Taiwan 10-16
For Thailand 10-20
For UAE 10-3
For Ukraine 10-37
Frame hooks 5-16
Front airbags 1-33
Front fog light 6-53
Front fog light indicator light 2-77
Front fog light switch 2-89, 10-30
Front position light 6-52
Front seat back pocket 5-13

Front seat heater 1-4
Front turn signal light 6-52
Fuel 10-20
Fuel consumption 9-2
Fuel filler cap 5-1
Fuel Filler Door 5-1
Fuel filler door 5-1
Fuel gauge 2-27
Fuel pump labeling 10-10
Fuel recommendation 10-10
Fuses 6-45
Fuses in engine compartment 6-46
Fuses under dashboard 6-47, 6-48

G

Gasoline-ethanol blends 10-10, 10-11
Gear oil 6-32
Gear oil change 6-34
Gear oil level check 6-33
Gear position 2-39
Glove box 5-11
Guide me light 2-88

H

Halogen headlights 6-51
Hazard warning switch 2-96
Head restraints 1-4, 1-5
Headlight aiming 6-49
Headlight leveling switch 2-94
Heated rear window switch / heated outside rearview mirror switch 2-99
Heating and air conditioning system 5-18
High beam assist 3-78
High beam assist indicator light (green) 2-82
High beam assist warning light (yellow) 2-82
High engine coolant temperature warning light (red color) 2-76
Highway driving 4-13
Hill descent control indicator light 3-137
Hill descent control switch 3-136
Hill hold control system 3-138
Horn 2-99
How ABS works 3-132
How to drive the vehicle with Automatic Transmission (AT) 3-37

I

Idling stop system indicator light 2-83
Idling stop system OFF indicator light 2-83
Ignition key reminder 2-2
Ignition switch 3-3
Illumination indicator light 2-77
Immobilizer / Keyless push start system warning light 2-75
Immobilizer system 2-1
Improving fuel economy 4-12
Information display 2-29
Information switch 2-29
Inside rearview mirror 2-21
Installation of child restraint with top tether 1-30
Installation of radio frequency transmitters 5-33
Installation with ISOFIX type anchorages 1-27
Instrument cluster 2-26
Instrument panel tray 5-12
Interior light 5-7, 6-57

Interior workable area for engine starting, ignition mode selection and remote controller outside warning 3-10
Intersection Guidance (When using Android AutoTM* on infotainment system)) 2-38
J
Jacking instructions 7-1
Jump-starting instructions 7-6
K
Keyless entry system transmitter 2-6
Keyless push start system 3-10
Keyless push start system remote controller 2-9
Keys 2-1
Kickdown 3-37
L
Lane departure prevention 3-71, 3-72
Lane departure prevention indicator light 2-81
Lane departure prevention OFF indicator light 2-81
Lane departure warning 3-71
Lap-shoulder belt 1-10
Lap-shoulder belt with detachable connector 1-11
LED headlights 6-51
License plate light 6-56
Light reminder buzzer 2-87
Light reminder buzzer (For Hong Kong, Macao and Singapore) 10-29
Lighting control lever 2-84
Lightning control lever 10-27
Lightning operation 2-85
Low engine coolant temperature light (blue color) 2-76
Low fuel warning light 2-75
Low speed brake support at a low speed (forward and backward) 10-31
Low tyre pressure warning light 2-67, 3-141
M
Main beam (high beam) indicator light 2-77
Maintenance recommended under severe driving conditions (except for vehicle with oil life monitoring system) 6-8
Maintenance recommended under severe driving conditions (for vehicle with oil life monitoring system) 6-18
Maintenance schedule 6-2
Malfunction indicator light 2-73
Manual heating and air conditioning system 5-19
Manual transmission 3-29
Master warning indicator light 2-78
Mirrors 2-21
O
Oil change reminder light 2-77
Oil filter replacement 6-26
Oil level check 6-24
Open door warning light 2-75
Outside rearview mirrors 2-22
Outside rearview mirrors folding switch 2-22
Overdrive OFF switch light 2-79

P

Parking brake 6-37
Parking brake lever 3-7
Parking sensors 3-116
Pedal 3-9
Periodic maintenance schedule (except for vehicle with oil life monitoring system) 6-3
Periodic maintenance schedule (for vehicle with oil life monitoring system) 6-13
Pinching prevention function 2-20
Power-assisted brakes 3-130
Preparation before winter season 6-65

R

Radio antenna 5-32
Raising vehicle with garage jack 7-3
Rear combination light 6-55
Rear differential oil 6-32
Rear fog light indicator light 2-77
Rear fog light switch 2-89
Rear passenger's seat belt reminder light 2-72
Rear seats 1-5
Rear window wiper/washer switch 2-98
Refill with oil and oil leakage check 6-27
Refilling 6-25
Refueling 5-2
Remote audio controls 5-33
Remote controller outside warning 3-13
Remote folding mirrors 2-23
Replacing tyres and/or wheels 3-148
Running-in 4-11

S

Seat adjustment 1-2
Seat belt force limiter system 1-19
Seat belt inspection 1-17
Seat belt pretensioner system 1-18
Seat belt reminder 1-15
Seat belt warning 10-14
Seat belts and child restraint systems 1-7
Seat position adjustment lever 1-3
Seatback angle adjustment lever 1-3
Selection of coolant 6-27
Selection of ignition modes 3-11
Side airbags and side curtain airbags 1-37
Side door locks 2-2
Side turn signal light 6-53
Spark plugs 6-29
Specified fluid 6-31
Speedometer 2-27
Stability control system 3-133
Starting / stopping engine (vehicle with keyless push start system) 3-15
Starting / stopping engine (vehicle without keyless push start system) 3-14
Steering wheel 6-38
Sun visor 5-6
Supplemental restraint system (airbags) 1-31
SUZUKI SAFETY SUPPORT 3-48

T
Tachometer 2-27
Tailgate 2-4
Theft deterrent alarm system 2-15
Theft deterrent light 2-19
Thermometer 2-31
Tilt steering lock lever 2-99
Total idling stop time and total idling fuel saved 2-36
Towing your vehicle (recreational towing) 7-7
Traction control system 3-133
Traffic sign recognition 3-80
Trailer towing 2-101
Transfer lever 3-41
Transfer oil 6-32
Transmission warning light 3-35
Trip meter 2-39
Turn signal control lever 2-95
Turn signal indicators 2-76
Turn signal operation 2-95
Tyre changing tool 7-1
Tyre inspection 6-39
Tyre Pressure Monitoring System (TPMS) 3-140
Tyre rotation 6-40
Tyres 6-38
U
Ultrasonic sensors 3-111
USB socket 5-10
Using transmission 3-29
V
Vehicle cleaning 8-2
Vehicle identification 9-1
Vehicle swaying warning 3-72
W
Warning and indicator lights 2-67
Warning and indicator messages 2-47, 3-95, 3-108, 3-121
Washing 8-5
Waxing 8-7
When driving the vehicle with Automatic Transmission (AT) 3-35
Windows 2-19
Windshield washer 2-97
Windshield washer fluid 6-62
Windshield wiper and washer lever 2-96
Windshield wipers 2-97
Winter tyre 6-65
Wiper and washer operation 2-97
Wiper blades 6-59

CLASS A
NBTC ID. A57004-17-2815

CLASS A
NBTC ID. A57007-20-2815

This telecommunications equipment and device comply with the standards or technical specifications of the NBTC. This radio communication equipment emits electromagnetic waves that comply with the standards for human health safety from the use of radio communication equipment announced by the National Broadcasting and Telecommunication Commission (NBTC). To avoid potential dangers from electromagnetic waves, please maintain a distance of more than 20 cm from the radar sensor while it is operating. This radio communication equipment emits electromagnetic waves that comply with the standards for human health safety from the use of radio communication equipment announced by the National Broadcasting and Telecommunications Commission (if equipped).



K56RA, I55R0, K56R0, K56RQ, K73R0
P55R0, R55R2, R55R3, T55R1, K72R0
K84S0, K74UA, T85UE

K56R0,K73R0,R55R2,P55R0,I55R0,
T55R1,R55R3,T55R2,K72R0
K84S0,T85UE



MEMO

BATTERY LABEL SYMBOL MEANINGS

	No smoking, no naked flames, no sparks		Battery acid
	Shield eyes		Note operating instructions
	Keep away from children		Explosive gas

Prepared by

Suzuki Motor Corporation

March, 2026

Part No. 99011-85UB1-01E
Printed in Japan

TP636

SERVICE STATION INFORMATION

Fuel recommendation:
See page 9-2

Engine oil :

Classification: API SL, SM, SN or SP
ILSAC GF-6
ACEA A3/B4, A5/B5

Viscosity: SAE **0W-16**, 0W-20, 5W-30, 10W-30, 10W-40, 15W-40, 20W-40

For further details, see “Engine Oil and Filter” in the “INSPECTION AND MAINTENANCE” section.

Brake fluid:
DOT3 or SAE J1703

Automatic transmission fluid:
SUZUKI ATF3317 or Mobil ATF3309.

Tyre cold pressure:
See the “Tyre Information Label” located on the driver’s door lock pillar.

㊎

SUZUKI

99011-85UB1-01E

Suzuki Motor Corporation **Part No. 99011-85UB1-01E March, 2026** Ⓒ ㊎

Printed in Japan